No. PF-2U0A

TCM®

PARTS CATALOGUE

FORKLIFT TRUCK

Diesel Powered

FD20C3Z
FD20T3Z
FD25C3Z
FD25T3Z

TCM CORPORATION

ご使用のまえに

このパーツカタログは，TCM フォークリフトの構成部品を収録しています。

部品ご注文について

部品ご注文の際は，必ず車両の形式・仕様・製造番号（号車），部品番号および注文数を明示してください。車両の製造番号（号車）は車両銘板に表示しています。

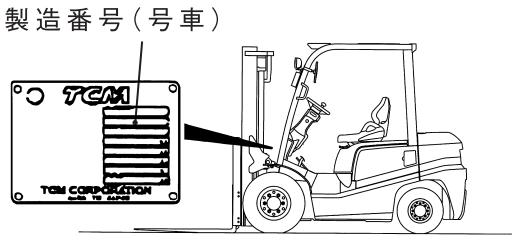

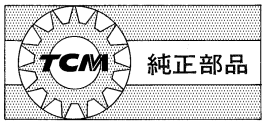

部品は，必ず「TCM 純正部品」をご使用ください。
純正部品以外の部品をご使用になり，故障が発生した場合は保証できません。

ご使用について

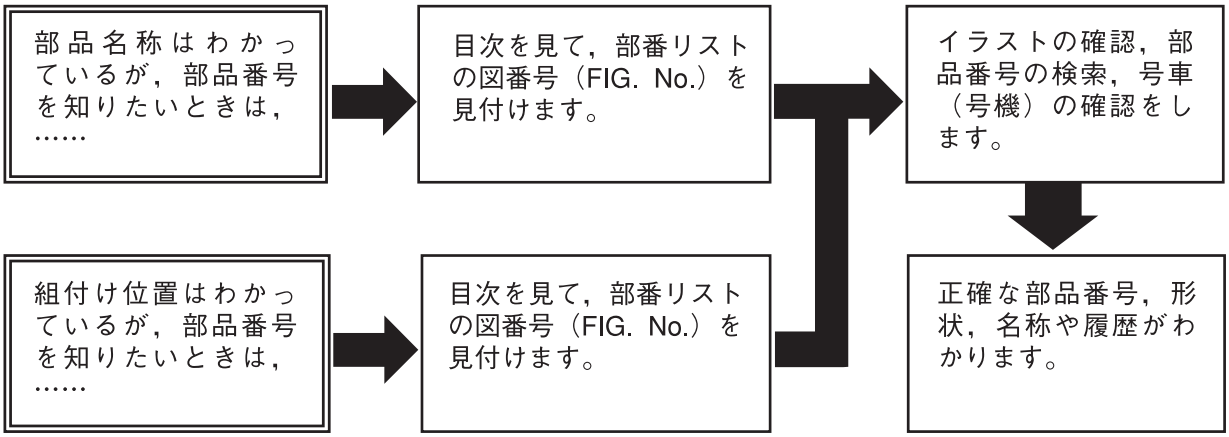

略語および記号

ＡＳＳＹ	組立品を示します。
ＲＨ	車両の前方向に向かって右側を示します。
ＬＨ	車両の前方向に向かって左側を示します。
ＡＲ	必要に応じた数を使用します。
＊	セットおよびキットの販売部品を示します。
Ｔ	厚みを示します。
＋	図示していません。
＃	単体販売しません。

部品は，品質向上のため予告なく変更することがありますので，あらかじめご了承ください。
詳細は，TCM 指定整備工場にご相談ください。

INTRODUCTION

This Parts Catalogue contains the component parts of the TCM FORKLIFT TRUCK.

How to order parts

When ordering, be sure to specify the model name, specification and serial number (machine number) of your machine, as well as the part number and desired quantity for each part. The machine serial number (machine number) is indicated on the machine name plate.

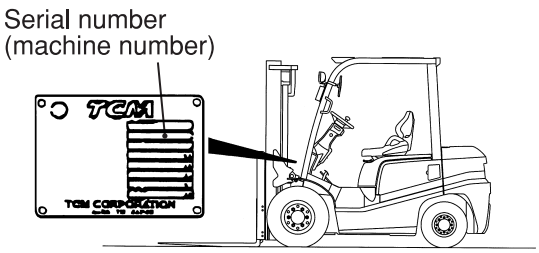

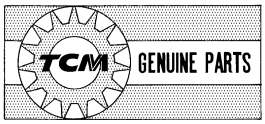

Always use "TCM's Genuine Parts". We cannot guarantee any loss or trouble attributable to other parts than ours.

How to use the Parts Catalogue

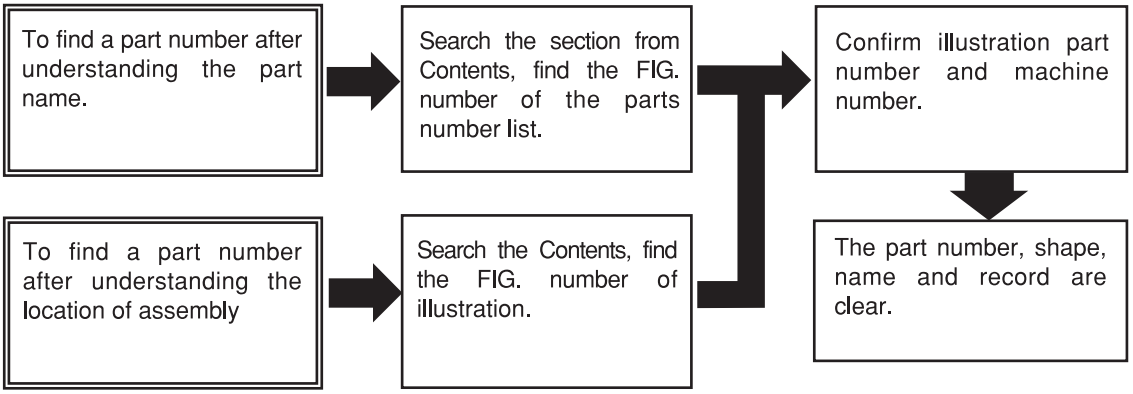

Abbreviations and symbols

ASSY ···	Assembled unit.
RH ·····	Right-hand when viewed forward on the truck.
LH ·····	Left-hand when viewed forward on the truck.
AR ·····	Quantity required.
* ·····	The marketable part set or kit.
T ·····	Thickness.
+ ·····	Not illustrated.
# ·····	Not sold separately.

Materals and specifications subject to change without notice.

CONTENTS　目次

CHASSIS ｼｬｰｼ

a	FD20C3Z	c	FD25C3Z
b	FD20T3Z	d	FD25T3Z

SECTION　部門	a	b	c	d	FIG.NO.
ENGINE MOUNT ｴﾝｼﾞﾝﾏｳﾝﾄ	○	○	○	○	1
AIR CLEANER ｴｱｰｸﾘｰﾅ	○	○	○	○	2
AIR DUCT ｴｱｰﾀﾞｸﾄ	○	○	○	○	3
COOLING UNIT (CLUTCH) ｸｰﾘﾝｸﾞﾕﾆｯﾄ	○		○		4
COOLING UNIT (TOR-CON) ｸｰﾘﾝｸﾞﾕﾆｯﾄ		○		○	5
FAN SHROUD ﾌｧﾝｼｭﾗｳﾄﾞ	○	○	○	○	6
RADIATOR PARTS & RESERVE TANK ﾗｼﾞｴｰﾀﾊﾟｰﾂ&ﾘｻﾞｰﾌﾞﾀﾝｸ	○	○	○	○	7
RADIATOR HOSE ﾗｼﾞｴｰﾀﾎｰｽ	○	○	○	○	8
DUST SCREEN [DSR006][DSR008] ﾀﾞｽﾄｽｸﾘｰﾝ	○	○	○	○	9
FUEL SYSTEM ﾌｭｰｴﾙｼｽﾃﾑ	○	○	○	○	10
EXHAUST SYSTEM ｴｷｿﾞｰｽﾄｼｽﾃﾑ	○	○	○	○	11
EXHAUST SYSTEM [TUE] ｴｷｿﾞｰｽﾄｼｽﾃﾑ	○	○	○	○	12
FRONT TUBE & JOINT ﾌﾛﾝﾄﾁｭｰﾌﾞ&ｼﾞｮｲﾝﾄ	○	○	○	○	13
COMBINATION METER ｺﾝﾋﾞﾈｰｼｮﾝﾒｰﾀ	○	○	○	○	14
FRONT GUARD WIRE HARNESS (CLUTCH) ﾌﾛﾝﾄｶﾞｰﾄﾞﾜｲﾔﾊｰﾈｽ	○		○		15
FRONT GUARD WIRE HARNESS (TOR-CON) ﾌﾛﾝﾄｶﾞｰﾄﾞﾜｲﾔﾊｰﾈｽ		○		○	16
COMBINATION SWITCH (CLUTCH) ｺﾝﾋﾞﾈｰｼｮﾝｽｲｯﾁ	○		○		17
COMBINATION SWITCH (TOR-CON) ｺﾝﾋﾞﾈｰｼｮﾝｽｲｯﾁ		○		○	18
ELECTRIC PARTS (CLUTCH) ｴﾚｸﾄﾘｯｸﾊﾟｰﾂ	○		○		19
ELECTRIC PARTS (TOR-CON) ｴﾚｸﾄﾘｯｸﾊﾟｰﾂ		○		○	20
ENGINE WIRE HARNESS (CLUTCH) ｴﾝｼﾞﾝﾜｲﾔﾊｰﾈｽ	○		○		21

CONTENTS　目次

a	FD20C3Z	c	FD25C3Z
b	FD20T3Z	d	FD25T3Z

CHASSIS ｼｬｰｼ

SECTION　部門	a	b	c	d	FIG.NO.
ENGINE WIRE HARNESS (TOR-CON) ｴﾝｼﾞﾝﾜｲﾔﾊｰﾈｽ		○		○	22
BATTERY ﾊﾞｯﾃﾘ	○	○	○	○	23
HEAD LAMP & FRONT COMBINATION LAMP ﾍｯﾄﾞﾗﾝﾌﾟ&ﾌﾛﾝﾄｺﾝﾋﾞﾈｰｼｮﾝﾗﾝﾌﾟ	○	○	○	○	24
REAR COMBINATION LAMP ﾘﾔｰｺﾝﾋﾞﾈｰｼｮﾝﾗﾝﾌﾟ	○	○	○	○	25
REAR COMBINATION LAMP [RRE][SCB001][SCBCR] ﾘﾔｰｺﾝﾋﾞﾈｰｼｮﾝﾗﾝﾌﾟ	○	○	○	○	26
LICENSE LAMP [RRE] ﾗｲｾﾝｽﾗﾝﾌﾟ	○	○	○	○	27
LICENSE LAMP [SCB001/RRE][SCBCR/RRE] ﾗｲｾﾝｽﾗﾝﾌﾟ	○	○	○	○	28
LICENSE LAMP [LP] ﾗｲｾﾝｽﾗﾝﾌﾟ	○	○	○	○	29
REAR WORKING LIGHT [RWLR] ﾘﾔｰﾜｰｷﾝｸﾞﾗｲﾄ	○	○	○	○	30
REAR WORKING LIGHT [RWLL] ﾘﾔｰﾜｰｷﾝｸﾞﾗｲﾄ	○	○	○	○	31
REAR WORKING LIGHT [RWL2] ﾘﾔｰﾜｰｷﾝｸﾞﾗｲﾄ	○	○	○	○	32
REAR WORKING LIGHT [RWL/FE][RWL/TUE] ｴﾚｸﾄﾘｯｸﾊﾟｰﾂ	○	○	○	○	33
REAR WORKING LIGHT WIRE HARNESS [RWL] ﾘﾔｰﾜｰｷﾝｸﾞﾗｲﾄﾜｲﾔﾊｰﾈｽ	○	○	○	○	34
REAR WORKING LIGHT WIRE HARNESS [RWL/BBR] ﾘﾔｰﾜｰｷﾝｸﾞﾗｲﾄﾜｲﾔﾊｰﾈｽ	○	○	○	○	35
REVOLVING LIGHT [RLY][RLR] ﾘﾎﾞﾙﾋﾞﾝｸﾞﾗｲﾄ	○	○	○	○	36
REVOLVING LIGHT WIRE HARNESS [RLY][RLR] ﾘﾎﾞﾙﾋﾞﾝｸﾞﾗｲﾄﾜｲﾔﾊｰﾈｽ	○	○	○	○	37
SPOT LIGHT [SPL] ｽﾎﾟｯﾄﾗｲﾄ	○	○	○	○	38
BACK BUZZER ﾊﾞｯｸﾌﾞｻﾞｰ	○	○	○	○	39
FAN [FAN] ﾌｧﾝ	○	○	○	○	40
LIFT LOCK VALVE WIRE HARNESS [VLL] ﾘﾌﾄﾛｯｸﾊﾞﾙﾌﾞﾜｲﾔﾊｰﾈｽ	○	○	○	○	41
AMMETER [AM] ｱﾝﾒｰﾀ	○	○	○	○	42

CONTENTS　目次

a	FD20C3Z	c	FD25C3Z
b	FD20T3Z	d	FD25T3Z

CHASSIS ｼｬｰｼ

SECTION　部門	a	b	c	d	FIG.NO.
SPEED METER [SM] ｽﾋﾟｰﾄﾞﾒｰﾀ	○	○	○	○	43
TORQUE CONVERTER THERMOMETER [TTM] ﾄﾙｸｺﾝﾊﾞｰﾀｻｰﾓﾒｰﾀ		○		○	44
TORQUE CONVERTER PRESSURE METER [TPM] ﾄﾙｸｺﾝﾊﾞｰﾀﾌﾟﾚｯｼｬﾒｰﾀ		○		○	45
SPEED DETECTOR UNIT [SAS] ｽﾋﾟｰﾄﾞﾃﾞｨﾃｸﾀﾕﾆｯﾄ	○	○	○	○	46
SPEED ALARM SYSTEM [SASB] ｽﾋﾟｰﾄﾞｱﾗｰﾑｼｽﾃﾑ	○	○	○	○	47
SPEED ALARM SYSTEM [SASR] ｽﾋﾟｰﾄﾞｱﾗｰﾑｼｽﾃﾑ	○	○	○	○	48
SPEED ALARM SYSTEM [SASC] ｽﾋﾟｰﾄﾞｱﾗｰﾑｼｽﾃﾑ	○	○	○	○	49
OK MONITOR [OKM] OKﾓﾆﾀ	○	○	○	○	50
INTERLOCK (CLUTCH):[SIL] ｲﾝﾀｰﾛｯｸ	○		○		51
INTERLOCK (TOR-CON):[SIL] ｲﾝﾀｰﾛｯｸ		○		○	52
DRIVE UNIT MOUNT (CLUTCH) ﾄﾞﾗｲﾌﾞﾕﾆｯﾄﾏｳﾝﾄ	○		○		53
DRIVE UNIT MOUNT (TOR-CON) ﾄﾞﾗｲﾌﾞﾕﾆｯﾄﾏｳﾝﾄ		○		○	54
CHANGE LEVER (CLUTCH) ﾁｪﾝｼﾞﾚﾊﾞｰ	○		○		55
CLUTCH (CLUTCH) ｸﾗｯﾁ	○		○		56
MISSION CASE (CLUTCH) ﾐｯｼｮﾝｹｰｽ	○		○		57
MISSION GEAR (CLUTCH) ﾐｯｼｮﾝｷﾞﾔｰ	○		○		58
TORQUE CONVERTER CASE (TOR-CON) ﾄﾙｸｺﾝﾊﾞｰﾀｹｰｽ		○		○	59
CHARGING PUMP (TOR-CON) ﾁｬｰｼﾞﾝｸﾞﾎﾟﾝﾌﾟ		○		○	60
MISSION CASE (TOR-CON) ﾐｯｼｮﾝｹｰｽ		○		○	61
CLUTCH PACK (TOR-CON) ｸﾗｯﾁﾊﾟｯｸ		○		○	62
CONTROL VALVE (TOR-CON) ｺﾝﾄﾛｰﾙﾊﾞﾙﾌﾞ		○		○	63

CONTENTS　目次

a	FD20C3Z	c	FD25C3Z
b	FD20T3Z	d	FD25T3Z

CHASSIS ｼｬｰｼ

SECTION　部門	a	b	c	d	FIG.NO.
DRIVE AXLE ﾄﾞﾗｲﾌﾞｱｸｽﾙ	○	○	○	○	64
DRUM HUB ﾄﾞﾗﾑﾊﾌﾞ	○	○	○	○	65
PROPELLER SHAFT ﾌﾟﾛﾍﾟﾗｼｬﾌﾄ	○	○	○	○	66
REDUCTION & DIFFERENTIAL ﾘﾀﾞｸｼｮﾝ&ﾃﾞｨﾌｧﾚﾝｼｬﾙ	○	○	○	○	67
REDUCTION ﾘﾀﾞｸｼｮﾝ	○	○	○	○	68
DIFFERENTIAL ﾃﾞｨﾌｧﾚﾝｼｬﾙ	○	○	○	○	69
WHEEL BRAKE ﾎｲｰﾙﾌﾞﾚｰｷ	○	○	○	○	70
STEERING WHEEL UNIT ｽﾃｱﾘﾝｸﾞﾎｲｰﾙﾕﾆｯﾄ	○	○	○	○	71
ORBITROL ｵｰﾋﾞｯﾄﾛｰﾙ	○	○	○	○	72
ORBITROL FITTING ｵｰﾋﾞｯﾄﾛｰﾙﾌｨｯﾃｨﾝｸﾞ	○	○	○	○	73
STEERING AXLE ｽﾃｱﾘﾝｸﾞｱｸｽﾙ	○	○	○	○	74
AXLE SUPPORT ｱｸｽﾙｻﾎﾟｰﾄ	○	○	○	○	75
HUB NUT ﾊﾌﾞﾅｯﾄ	○	○	○	○	76
FENDER [DD][SDD][TUJSF] ﾌｪﾝﾀﾞ	○	○	○	○	77
FRONT WHEEL ﾌﾛﾝﾄﾎｲｰﾙ	○	○	○	○	78
FRONT WHEEL [DR F] ﾌﾛﾝﾄﾎｲｰﾙ	○	○	○	○	79
FRONT WHEEL [TJ F][TJSF][T　F][TS F] ﾌﾛﾝﾄﾎｲｰﾙ	○	○	○	○	80
FRONT WHEEL [(TJ F,TJSF,T　F,TS F)/DR F] ﾌﾛﾝﾄﾎｲｰﾙ	○	○	○	○	81
FRONT WHEEL [TSUF][TUJF][TUSF][TUWF][TUGF] ﾌﾛﾝﾄﾎｲｰﾙ	○	○	○	○	82
FRONT WHEEL [TUJF/DR F] ﾌﾛﾝﾄﾎｲｰﾙ	○	○	○	○	83
FRONT WHEEL [TRAF] ﾌﾛﾝﾄﾎｲｰﾙ	○	○	○	○	84

CONTENTS　目次

a	FD20C3Z	c	FD25C3Z
b	FD20T3Z	d	FD25T3Z

CHASSIS ｼｬｰｼ

SECTION　部門	a	b	c	d	FIG.NO.
FRONT WHEEL [TUJSF] ﾌﾛﾝﾄﾎｲｰﾙ	○	○	○	○	85
FRONT WHEEL [TJ W][TJSW][T W][TS W] ﾌﾛﾝﾄﾎｲｰﾙ	○	○	○	○	86
FRONT WHEEL [TUJW][TUSW][TUWW][TUGW] ﾌﾛﾝﾄﾎｲｰﾙ	○	○	○	○	87
FRONT WHEEL [TJ W70][TJSW70][T W70][TS W70] ﾌﾛﾝﾄﾎｲｰﾙ	○	○	○	○	88
FRONT WHEEL [TUJW70][TUSW70][TUWW70][TUGW70] ﾌﾛﾝﾄﾎｲｰﾙ	○	○	○	○	89
REAR WHEEL ﾘﾔｰﾎｲｰﾙ	○	○	○	○	90
REAR WHEEL [DR R] ﾘﾔｰﾎｲｰﾙ	○	○	○	○	91
REAR WHEEL [TJ R][TJSR][T R][TS R] ﾘﾔｰﾎｲｰﾙ	○	○	○	○	92
REAR WHEEL [(TJ R,TJSR,T R,TS R)/DR R] ﾘﾔｰﾎｲｰﾙ	○	○	○	○	93
REAR WHEEL [TSUR][TUJR][TUSR][TUWR][TUGR] ﾘﾔｰﾎｲｰﾙ	○	○	○	○	94
REAR WHEEL [TUJR/DR R] ﾘﾔｰﾎｲｰﾙ	○	○	○	○	95
REAR WHEEL [TRAR] ﾘﾔｰﾎｲｰﾙ	○	○	○	○	96
POWER CYLINDER ﾊﾟﾜｰｼﾘﾝﾀﾞ	○	○	○	○	97
OVERHEAD GUARD ｵｰﾊﾞﾍｯﾄﾞｶﾞｰﾄﾞ	○	○	○	○	98
FRONT LAMP BRACKET ﾌﾛﾝﾄﾗﾝﾌﾟﾌﾞﾗｹｯﾄ	○	○	○	○	99
FRONT LAMP BRACKET [HL][BKH] ﾌﾛﾝﾄﾗﾝﾌﾟﾌﾞﾗｹｯﾄ	○	○	○	○	100
REAR LAMP COVER ﾘﾔｰﾗﾝﾌﾟｶﾊﾞｰ	○	○	○	○	101
REAR LAMP COVER [RRE] ﾘﾔｰﾗﾝﾌﾟｶﾊﾞｰ	○	○	○	○	102
HEAD GUARD PARTS ﾍｯﾄﾞｶﾞｰﾄﾞﾊﾟｰﾂ	○	○	○	○	103
ACCEL PEDAL ｱｸｾﾙﾍﾟﾀﾞﾙ	○	○	○	○	104
FOOT PEDAL (CLUTCH) ﾌｯﾄﾍﾟﾀﾞﾙ	○		○		105

CONTENTS　目次

a	FD20C3Z	c	FD25C3Z
b	FD20T3Z	d	FD25T3Z

CHASSIS ｼｬｰｼ

SECTION　部門	a	b	c	d	FIG.NO.
FOOT PEDAL (TOR-CON) ﾌｯﾄﾍﾟﾀﾞﾙ		○		○	106
FOOT PEDAL CYLINDER (CLUTCH) ﾌｯﾄﾍﾟﾀﾞﾙｼﾘﾝﾀﾞ	○		○		107
FOOT PEDAL CYLINDER (TOR-CON) ﾌｯﾄﾍﾟﾀﾞﾙｼﾘﾝﾀﾞ		○		○	108
BRAKE PIPE (CLUTCH) ﾌﾞﾚｰｷﾊﾟｲﾌﾟ	○		○		109
BRAKE PIPE (TOR-CON) ﾌﾞﾚｰｷﾊﾟｲﾌﾟ		○		○	110
FOOT PEDAL PARTS ﾌｯﾄﾍﾟﾀﾞﾙﾊﾟｰﾂ	○	○	○	○	111
CLUTCH MASTER CYLINDER (CLUTCH) ｸﾗｯﾁﾏｽﾀｼﾘﾝﾀﾞ	○		○		112
BRAKE MASTER CYLINDER ﾌﾞﾚｰｷﾏｽﾀｼﾘﾝﾀﾞ	○	○	○	○	113
CLUTCH RELEASE CYLINDER (CLUTCH) ｸﾗｯﾁﾘﾘｰｽｼﾘﾝﾀﾞ	○		○		114
BRAKE LEVER ﾌﾞﾚｰｷﾚﾊﾞｰ	○	○	○	○	115
FRAME ﾌﾚｰﾑ	○	○	○	○	116
OIL TANK ｵｲﾙﾀﾝｸ	○	○	○	○	117
OIL CAP & LEVEL ｵｲﾙｷｬｯﾌﾟ&ﾚﾍﾞﾙ	○	○	○	○	118
FUEL TANK ﾌｭｰｴﾙﾀﾝｸ	○	○	○	○	119
BALANCE WEIGHT ﾊﾞﾗﾝｽｳｴｲﾄ	○	○	○	○	120
BALANCE WEIGHT [HC] ﾊﾞﾗﾝｽｳｴｲﾄ	○	○	○	○	121
FRONT GUARD ﾌﾛﾝﾄｶﾞｰﾄﾞ	○	○	○	○	122
BONNET ﾎﾞﾝﾈｯﾄ	○	○	○	○	123
RADIATOR COVER ﾗｼﾞｴｰﾀｶﾊﾞｰ	○	○	○	○	124
BONNET HINGE ﾎﾞﾝﾈｯﾄﾋﾝｼﾞ	○	○	○	○	125
FLOOR BOARD ﾌﾛｱﾎﾞｰﾄﾞ	○	○	○	○	126

CONTENTS　目次

a	FD20C3Z	c	FD25C3Z
b	FD20T3Z	d	FD25T3Z

CHASSIS ｼｬｰｼ

SECTION　部門	a	b	c	d	FIG.NO.
STEP & FLOOR MAT ｽﾃｯﾌﾟ&ﾌﾛｱﾏｯﾄ	○	○	○	○	127
FRONT COVER (CLUTCH) ﾌﾛﾝﾄｶﾊﾞｰ	○		○		128
FRONT COVER (TOR-CON) ﾌﾛﾝﾄｶﾊﾞｰ		○		○	129
SIDE COVER ｻｲﾄﾞｶﾊﾞｰ	○	○	○	○	130
SIDE COVER [SCB001][SCBCR] ｻｲﾄﾞｶﾊﾞｰ	○	○	○	○	131
FRONT SIDE COVER ﾌﾛﾝﾄｻｲﾄﾞｶﾊﾞｰ	○	○	○	○	132
SEAT ｼｰﾄ	○	○	○	○	133
SEAT [HGL] ｼｰﾄ	○	○	○	○	134
PUMP UNIT ﾎﾟﾝﾌﾟﾕﾆｯﾄ	○	○	○	○	135
CONTROL VALVE [2SV] ｺﾝﾄﾛｰﾙﾊﾞﾙﾌﾞ	○	○	○	○	136
CONTROL VALVE [3SV] ｺﾝﾄﾛｰﾙﾊﾞﾙﾌﾞ	○	○	○	○	137
CONTROL VALVE [4SV] ｺﾝﾄﾛｰﾙﾊﾞﾙﾌﾞ	○	○	○	○	138
CONTROL VALVE [5SV] ｺﾝﾄﾛｰﾙﾊﾞﾙﾌﾞ	○	○	○	○	139
CONTROL VALVE FITTING ｺﾝﾄﾛｰﾙﾊﾞﾙﾌﾞﾌｨｯﾃｨﾝｸﾞ	○	○	○	○	140
VALVE CONTROL [2SV] ﾊﾞﾙﾌﾞｺﾝﾄﾛｰﾙ	○	○	○	○	141
VALVE CONTROL [3SV] ﾊﾞﾙﾌﾞｺﾝﾄﾛｰﾙ	○	○	○	○	142
VALVE CONTROL [4SV] ﾊﾞﾙﾌﾞｺﾝﾄﾛｰﾙ	○	○	○	○	143
VALVE CONTROL [5SV] ﾊﾞﾙﾌﾞｺﾝﾄﾛｰﾙ	○	○	○	○	144
VALVE CONTROL KNOB ﾊﾞﾙﾌﾞｺﾝﾄﾛｰﾙﾉﾌﾞ	○	○	○	○	145
HYDRAULIC LINE (MAIN)(1/4) ﾊｲﾄﾞﾛﾘｯｸﾗｲﾝ(ﾒｲﾝ)(1/4)	○	○	○	○	146
HYDRAULIC LINE (MAIN)(2/4) ﾊｲﾄﾞﾛﾘｯｸﾗｲﾝ(ﾒｲﾝ)(2/4)	○	○	○	○	147

CONTENTS　目次

a	FD20C3Z	c	FD25C3Z
b	FD20T3Z	d	FD25T3Z

CHASSIS ｼｬｰｼ

SECTION　部門	a	b	c	d	FIG.NO.
HYDRAULIC LINE (MAIN)(3/4) ﾊｲﾄﾞﾛﾘｯｸﾗｲﾝ(ﾒｲﾝ)(3/4)	○	○	○	○	148
HYDRAULIC LINE (MAIN)(4/4) ﾊｲﾄﾞﾛﾘｯｸﾗｲﾝ(ﾒｲﾝ)(4/4)	○	○	○	○	149
HYDRAULIC LINE (TOR-CON) ﾊｲﾄﾞﾛﾘｯｸﾗｲﾝ(ﾄﾙｺﾝ)		○		○	150
TILT CYLINDER ﾃｨﾙﾄｼﾘﾝﾀﾞ	○	○	○	○	151
TILT BOOT [TLB][FC] ﾃｨﾙﾄﾌﾞｰﾂ	○	○	○	○	152
DECAL (1/2) ﾃﾞｶﾙ(1/2)	○	○	○	○	153
DECAL (2/2) ﾃﾞｶﾙ(2/2)	○	○	○	○	154
DECAL (2/2)[EXB] ﾃﾞｶﾙ(2/2)	○	○	○	○	155
SERVICE TOOL ｻｰﾋﾞｽﾂｰﾙ	○	○	○	○	156

CONTENTS　目次

MAST ﾏｽﾄ

a	FD20C3Z	c	FD25C3Z
b	FD20T3Z	d	FD25T3Z

SECTION　部門	a	b	c	d	FIG.NO.
[VM2N5]					
FORK [VM2N5] ﾌｫｰｸ	○	○	○	○	157
LIFT BRACKET [VM2N5] ﾘﾌﾄﾌﾞﾗｹｯﾄ	○	○	○	○	158
BACKREST [VM2N5] ﾊﾞｯｸﾚｽﾄ	○	○	○	○	159
MAST [VM2N5] ﾏｽﾄ	○	○	○	○	160
LIFT CYLINDER [VM2N5] ﾘﾌﾄｼﾘﾝﾀﾞ	○	○	○	○	161
MAST PIPING [VM2N5] ﾏｽﾄﾊﾟｲﾋﾟﾝｸﾞ	○	○	○	○	162
[VFM2N5]					
FORK [VFM2N5] ﾌｫｰｸ	○	○	○	○	163
LIFT BRACKET [VFM2N5] ﾘﾌﾄﾌﾞﾗｹｯﾄ	○	○	○	○	164
BACKREST [VFM2N5] ﾊﾞｯｸﾚｽﾄ	○	○	○	○	165
MAST [VFM2N5] ﾏｽﾄ	○	○	○	○	166
TILT GAUGE[VFM2N5/(TG,PPC,PR,PRC,MPC) ﾃｨﾙﾄｹﾞｰｼﾞ	○	○	○	○	167
LIFT CYLINDER (FRONT) [VFM2N5] ﾘﾌﾄｼﾘﾝﾀﾞ(ﾌﾛﾝﾄ)	○	○	○	○	168
LIFT CYLINDER (REAR) [VFM2N5] ﾘﾌﾄｼﾘﾝﾀﾞ(ﾘﾔｰ)	○	○	○	○	169
MAST PIPING [VFM2N5] ﾏｽﾄﾊﾟｲﾋﾟﾝｸﾞ	○	○	○	○	170

CONTENTS　目次

MAST マスト

a	FD20C3Z	c	FD25C3Z
b	FD20T3Z	d	FD25T3Z

SECTION　部門	a	b	c	d	FIG.NO.
[VFHM2N5]					
FORK [VFHM2N5] ﾌｫｰｸ	○	○	○	○	171
LIFT BRACKET [VFHM2N5] ﾘﾌﾄﾌﾞﾗｹｯﾄ	○	○	○	○	172
BACKREST [VFHM2N5] ﾊﾞｯｸﾚｽﾄ	○	○	○	○	173
MAST [VFHM2N5] ﾏｽﾄ	○	○	○	○	174
TILT GAUGE[VFHM2N5/(TG,PPC,PR,PRC,MPC) ﾃｨﾙﾄｹﾞｰｼﾞ	○	○	○	○	175
LIFT CYLINDER (FRONT) [VFHM2N5] ﾘﾌﾄｼﾘﾝﾀﾞ(ﾌﾛﾝﾄ)	○	○	○	○	176
LIFT CYLINDER (REAR) [VFHM2N5] ﾘﾌﾄｼﾘﾝﾀﾞ(ﾘﾔｰ)	○	○	○	○	177
MAST PIPING [VFHM2N5] ﾏｽﾄﾊﾟｲﾋﾟﾝｸﾞ	○	○	○	○	178
[VFHM2N4]					
FORK[VFHM2N4] ﾌｫｰｸ	○	○	○	○	179
LIFT BRACKET[VFHM2N4] ﾘﾌﾄﾌﾞﾗｹｯﾄ	○	○	○	○	180
BACKREST[VFHM2N4] ﾊﾞｯｸﾚｽﾄ	○	○	○	○	181
MAST[VFHM2N4] ﾏｽﾄ	○	○	○	○	182
LIFT CYLINDER(FRONT)[VFHM2N4] ﾘﾌﾄｼﾘﾝﾀﾞ(ﾌﾛﾝﾄ)	○	○	○	○	183
LIFT CYLINDER(REAR)[VFHM2N4] ﾘﾌﾄｼﾘﾝﾀﾞ(ﾘﾔｰ)	○	○	○	○	184
MAST PIPING[VFHM2N4] ﾏｽﾄﾊﾟｲﾋﾟﾝｸﾞ	○	○	○	○	185

M E M O

FIG.1 ENGINE MOUNT

(F7Z21020) エンジンマウント

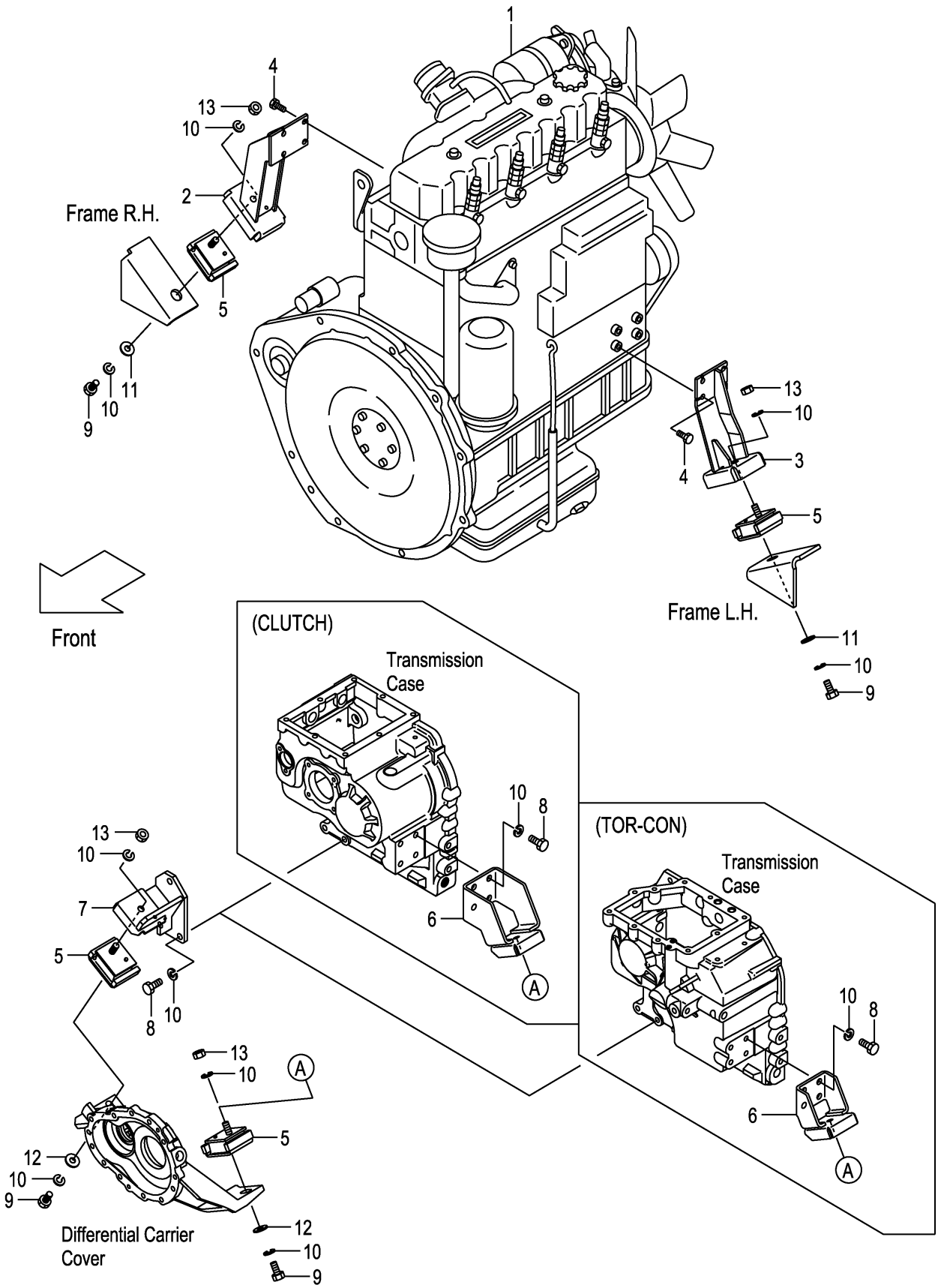

FIG.1

A:FD20C3Z FD25C3Z
B:FD20T3Z FD25T3Z

(F7Z21020)

Item No	Part No.	Mark	Description		Req'd	Remarks : Serial No.
1	22U51-00101		ENGINE,C240	ｴﾝｼﾞﾝ	1	
2	22U51-00201		BRACKET,ENGINE,RH	ﾌﾞﾗｹｯﾄ	1	
3	22U51-00211		BRACKET,ENGINE,LH	ﾌﾞﾗｹｯﾄ	1	
4	01217-10030		BOLT	ﾎﾞﾙﾄ	8	
5	22N51-00161		RUBBER,CUSHION	ﾗﾊﾞｰ	4	
6	22N41-00201		BRACKET,FRONT,LH	ﾌﾞﾗｹｯﾄ	1	A
-	22N51-00201		BRACKET,FRONT,LH	ﾌﾞﾗｹｯﾄ	1	B
7	22N51-00211		BRACKET,FRONT,RH	ﾌﾞﾗｹｯﾄ	1	
8	01103-12030		BOLT	ﾎﾞﾙﾄ	7	
9	01103-12025		BOLT	ﾎﾞﾙﾄ	4	
10	02011-00012		WASHER	ﾜｯｼｬ	15	
11	256C6-32011		WASHER	ﾜｯｼｬ	2	
12	256C9-52372		WASHER	ﾜｯｼｬ	2	
13	01400-00012		NUT	ﾅｯﾄ	4	

FIG.2 AIR CLEANER

(F7Z21040) エアークリーナ

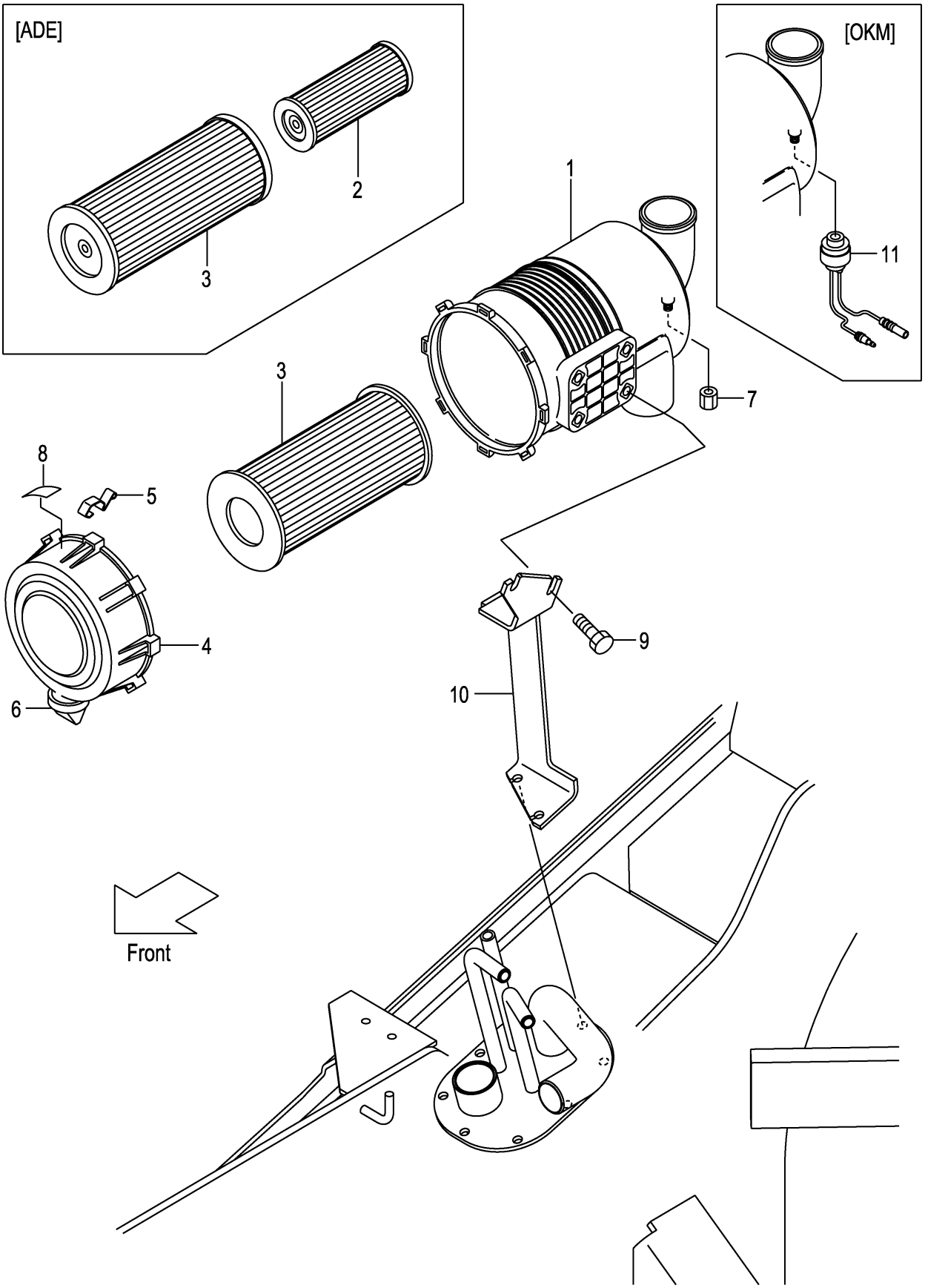

FIG.2

(F7Z21040)

A:FD20C3Z FD20T3Z FD25C3Z FD25T3Z

Item No	Part No.	Mark	Description		Req'd	Remarks : Serial No.
A1	216G1-02451		CLEANER-ASSY,AIR	ｴｱｰｸﾘｰﾅｱｯｾﾝ	1	INC.1,3-8
-	516G0-60101		CLEANER-ASSY,AIR	ｴｱｰｸﾘｰﾅｱｯｾﾝ	1	[ADE] INC.1-8
1	216G1-02481		BODY	ﾎﾞﾃﾞｨ	1	
2	213T1-02021		ELEMENT,INNER	ｴﾚﾒﾝﾄ	1	[ADE]
3	256C1-08011		ELEMENT,OUTER	ｴﾚﾒﾝﾄ	1	
-	213T1-02011		ELEMENT,OUTER	ｴﾚﾒﾝﾄ	1	[ADE]
4	216G1-02461		COVER	ｶﾊﾞｰ	1	
5	216G1-02471		LATCH	ﾗｯﾁ	3	
6	216G1-02491		VALVE,VACUATOR	ﾊﾞﾙﾌﾞ	1	
7	53651-12551		CAP,NIPPLE	ｷｬｯﾌﾟ	1	
8	216G1-02501		LABEL	ﾗﾍﾞﾙ	1	
-	516G0-62011		LABEL	ﾗﾍﾞﾙ	1	[ADE]
9	01183-08016		BOLT	ﾎﾞﾙﾄ	2	
10	22U51-00301		BRACKET,AIR-CLEANER	ﾌﾞﾗｹｯﾄ	1	
11	522A1-10201		SENSOR,762MM	ｾﾝｻ	1	[OKM]

FIG.3 AIR DUCT

(F7Z21060) エアーダクト

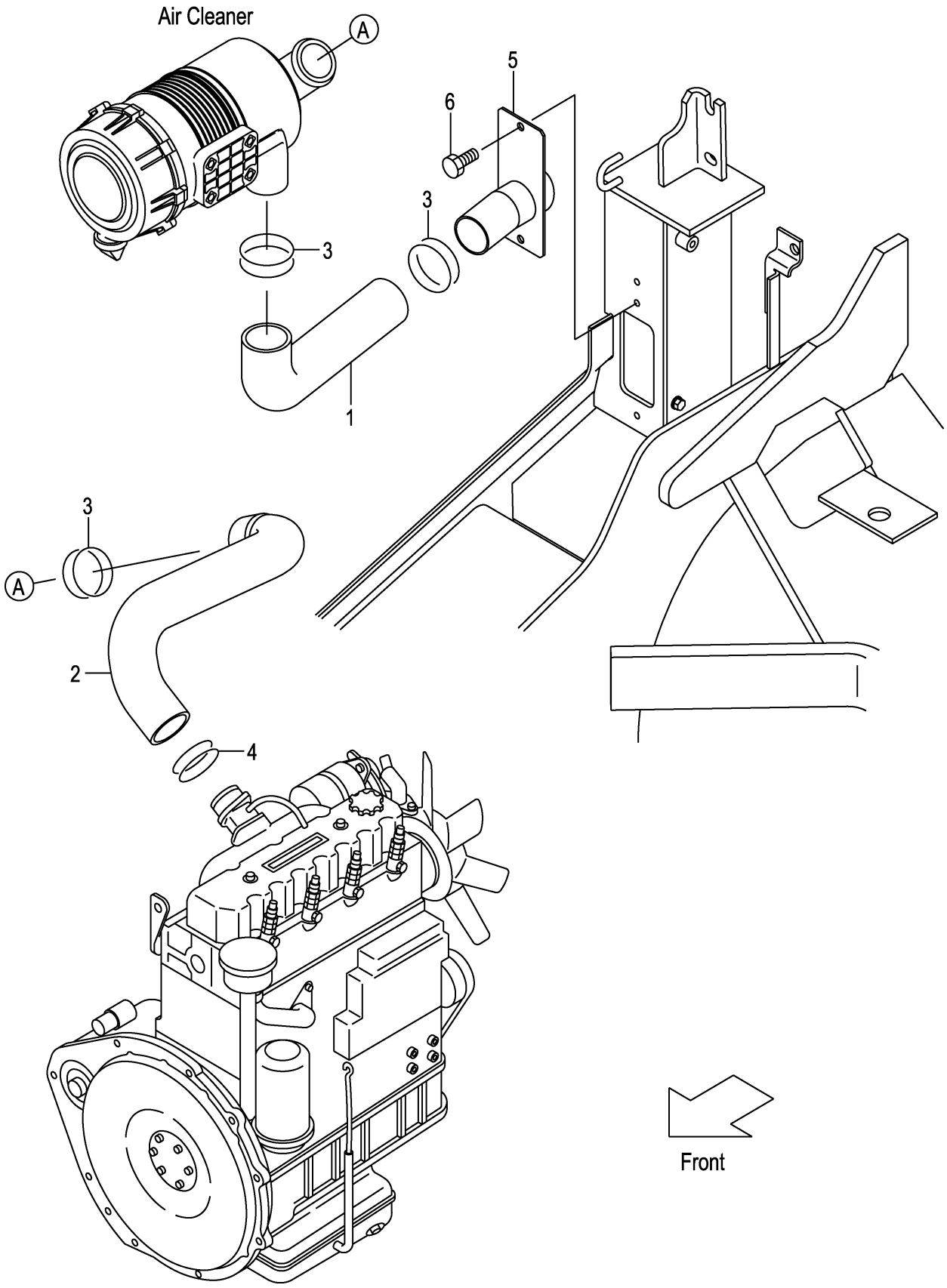

FIG.3

(F7Z21060)

A:FD20C3Z FD20T3Z FD25C3Z FD25T3Z

Item No	Part No.	Mark	Description		Req'd	Remarks : Serial No.
1	22B51-02201		HOSE,AIR-DUCT	ﾎｰｽ	1	
2	217M1-02001		HOSE,AIR-INTAKE	ﾎｰｽ	1	
3	04911-00060		CLIP	ｸﾘｯﾌﾟ	3	
4	04911-00065		CLIP	ｸﾘｯﾌﾟ	1	
5	22U51-02601		PIPE,DUCT	ﾊﾟｲﾌﾟ	1	
6	01185-08016		BOLT	ﾎﾞﾙﾄ	2	

FIG.4 COOLING UNIT (CLUTCH)

(F7Z22110) クーリング゛ユニット

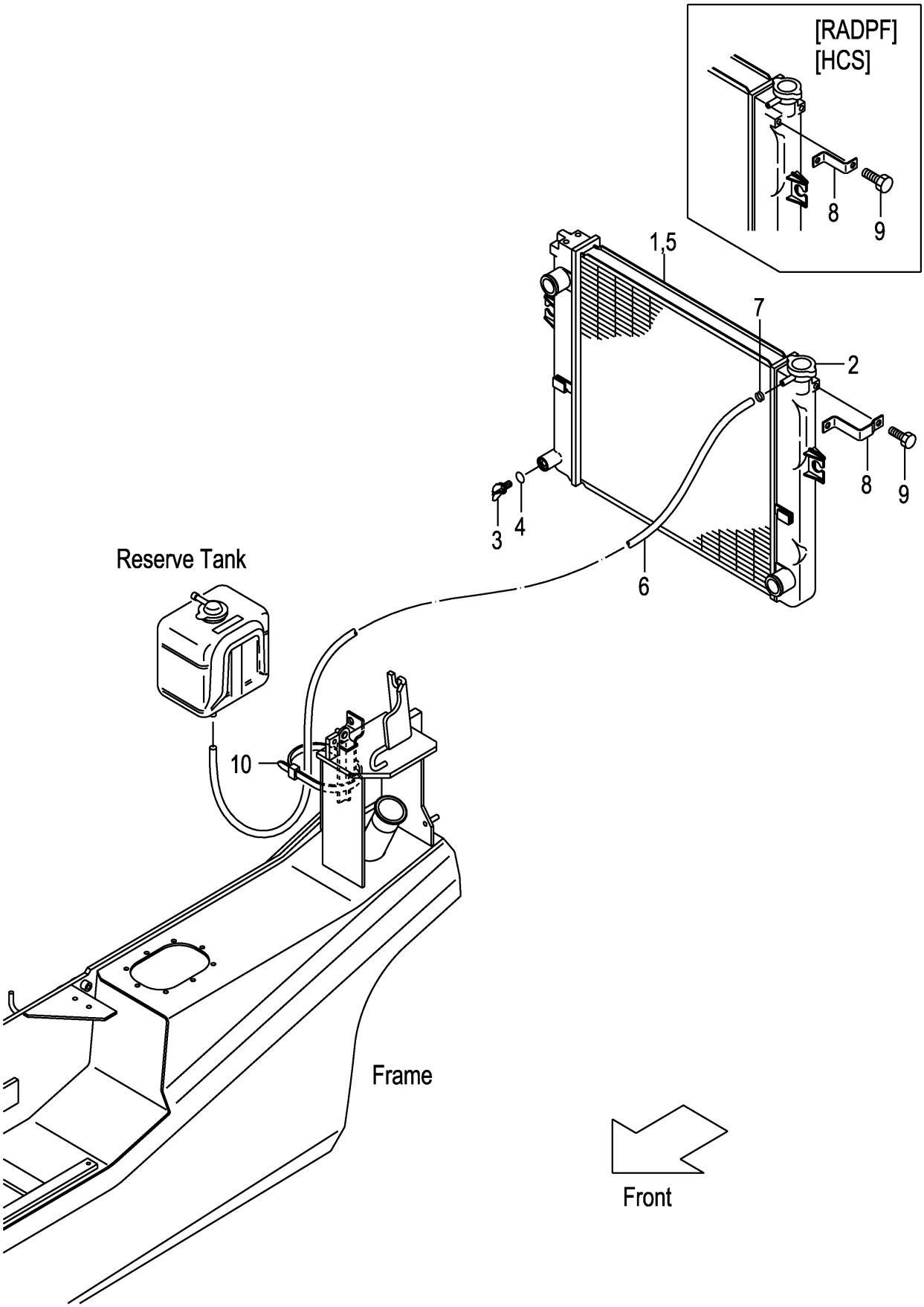

FIG.4

(F7Z22110)

A:FD20C3Z FD25C3Z

Item No	Part No.	Mark	Description		Req'd	Remarks : Serial No.
A1	239A2-10102		RADIATOR-ASSY	ﾗｼﾞｴｰﾀｱｯｾﾝ	1	INC.1-7
-	539A6-60302		RADIATOR-ASSY	ﾗｼﾞｴｰﾀｱｯｾﾝ	1	[RADPF][HCS] INC.1-7
1	NO PART NO.	#	RADIATOR	ﾗｼﾞｴｰﾀ	1	
-	NO PART NO.	#	RADIATOR	ﾗｼﾞｴｰﾀ	1	[RADPF][HCS]
2	222A2-10211		CAP	ｷｬｯﾌﾟ	1	
3	234A2-12201		COCK	ｺｯｸ	1	
4	234A2-12211		O-RING	Oﾘﾝｸﾞ	1	
5	NO PART NO.	#	NUT	ﾅｯﾄ	3	
-	NO PART NO.	#	NUT	ﾅｯﾄ	4	[RADPF][HCS]
6	NO PART NO.		HOSE	ﾎｰｽ	1	
7	23772-12071		CLIP	ｸﾘｯﾌﾟ	1	
8	239A2-12141		BRACKET	ﾌﾞﾗｹｯﾄ	1	
-	239B2-12141		BRACKET	ﾌﾞﾗｹｯﾄ	1	[RADPF][HCS]
9	01185-08016		BOLT	ﾎﾞﾙﾄ	1	
10	29590-64501		BAND	ﾊﾞﾝﾄﾞ	1	110-

FIG.5 COOLING UNIT (TOR-CON)

(F7Z22120) クーリング゛ユニット

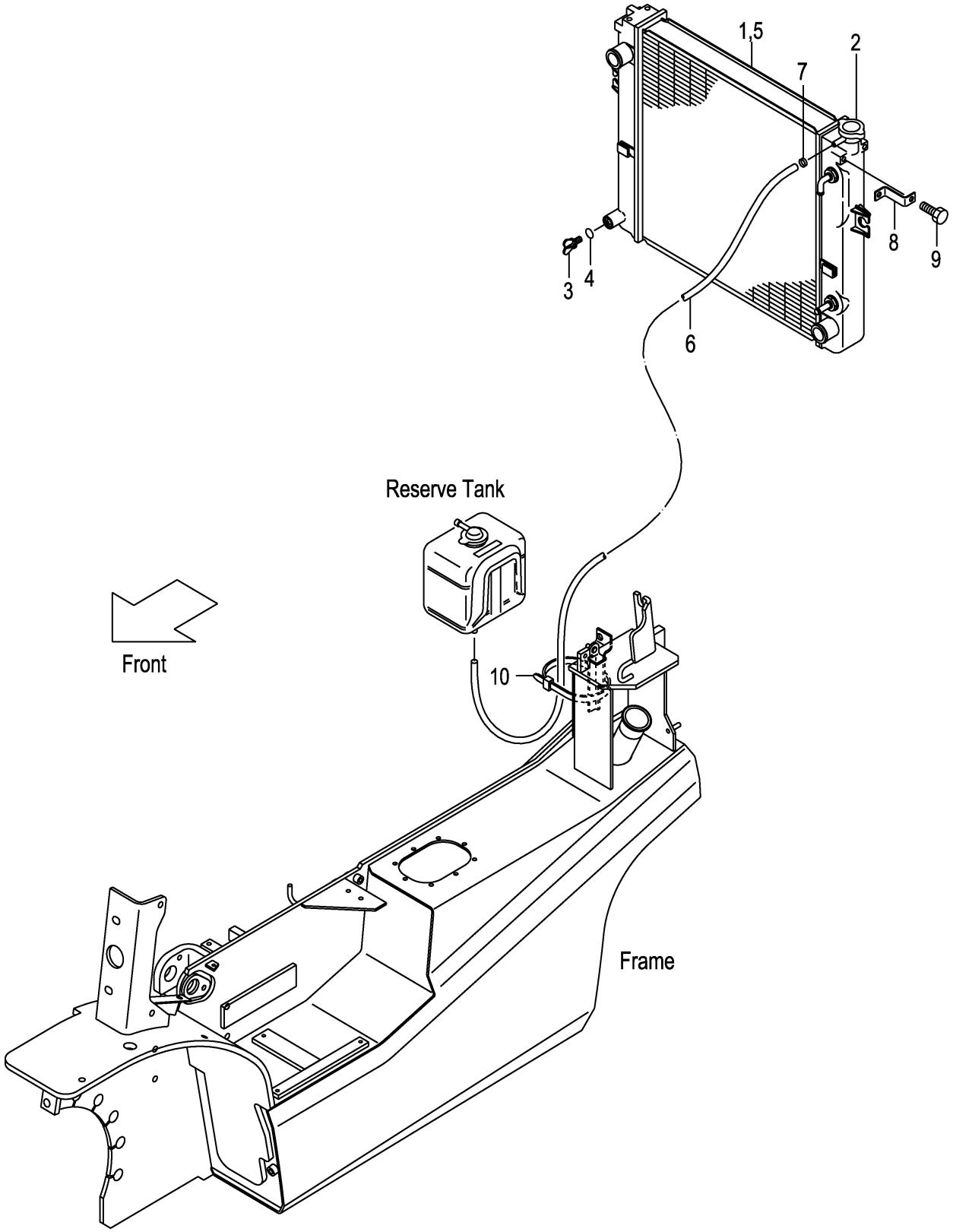

FIG.5

(F7Z22120)

A:FD20T3Z FD25T3Z

Item No	Part No.	Mark	Description		Req'd	Remarks : Serial No.
A1	239B2-10102		RADIATOR-ASSY	ﾗｼﾞｴｰﾀｱｯｾﾝ	1	INC.1-7
-	538B6-60302		RADIATOR-ASSY	ﾗｼﾞｴｰﾀｱｯｾﾝ	1	[RADPF][HCS] INC.1-7
1	NO PART NO.	#	RADIATOR	ﾗｼﾞｴｰﾀ	1	
-	NO PART NO.	#	RADIATOR	ﾗｼﾞｴｰﾀ	1	[RADPF][HCS]
2	222A2-10211		CAP	ｷｬｯﾌﾟ	1	
3	234A2-12201		COCK	ｺｯｸ	1	
4	234A2-12211		O-RING	Oﾘﾝｸﾞ	1	
5	NO PART NO.	#	NUT	ﾅｯﾄ	4	
6	NO PART NO.		HOSE	ﾎｰｽ	1	
7	23772-12071		CLIP	ｸﾘｯﾌﾟ	1	
8	239B2-12141		BRACKET	ﾌﾞﾗｹｯﾄ	1	
9	01185-08016		BOLT	ﾎﾞﾙﾄ	1	
10	29590-64501		BAND	ﾊﾞﾝﾄﾞ	1	110-

FIG.6 FAN SHROUD

(F7Z22140) ﾌｧﾝｼｭﾗｳﾄﾞ

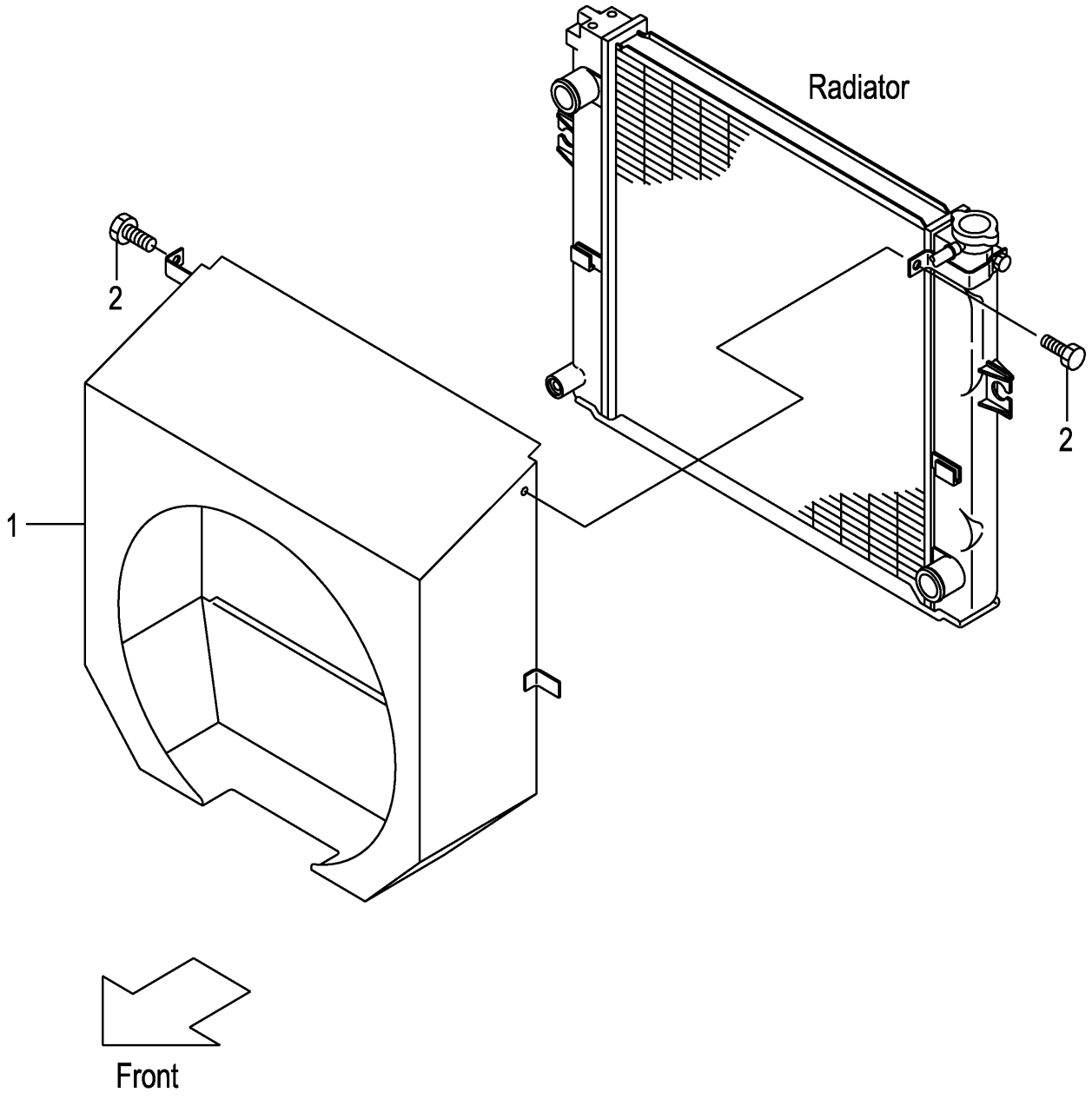

FIG.6

(F7Z22140)

A:FD20C3Z FD20T3Z FD25C3Z FD25T3Z

Item No	Part No.	Mark	Description		Req'd	Remarks : Serial No.
1	22U52-12201		SHROUD,FAN	ｼｭﾗｳﾄﾞ	1	
-	52U56-52001		SHROUD,FAN	ｼｭﾗｳﾄﾞ	1	[DSR006][DSR008]
2	01185-08016		BOLT	ﾎﾞﾙﾄ	2	

FIG.7 RADIATOR PARTS & RESERVE TANK

(F7Z22150) ﾗｼﾞｴｰﾀﾊﾟｰﾂ&ﾘｻﾞｰﾌﾞﾀﾝｸ

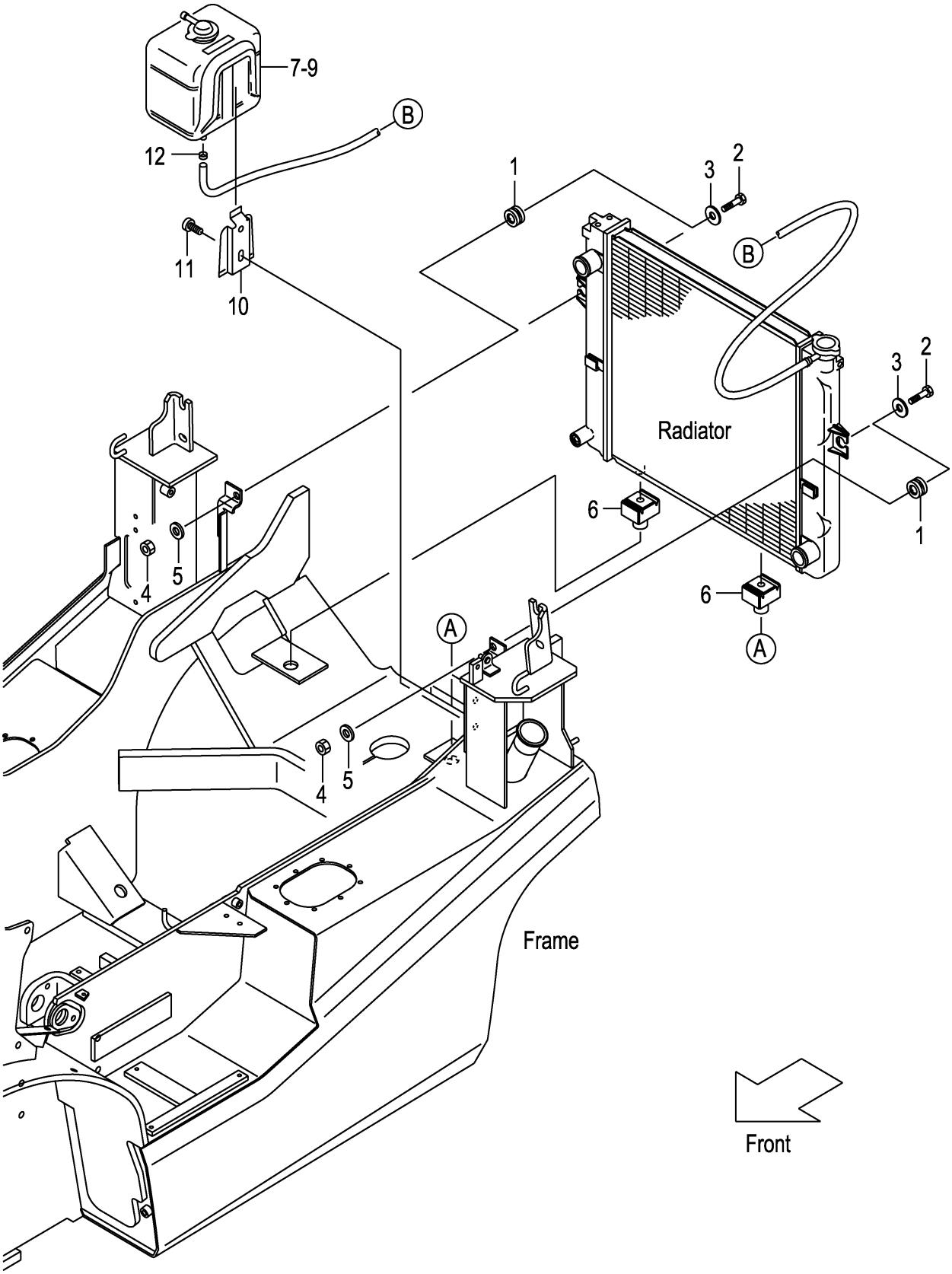

FIG.7

(F7Z22150)

A:FD20C3Z FD20T3Z FD25C3Z FD25T3Z

Item No	Part No.	Mark	Description		Req'd	Remarks : Serial No.
1	214A2-12001		RUBBER	ﾗﾊﾞｰ	2	
2	214A2-12021		BOLT	ﾎﾞﾙﾄ	2	
3	22252-32251		WASHER	ﾜｯｼｬ	2	
4	23652-12051		NUT	ﾅｯﾄ	2	
5	02000-00010		WASHER	ﾜｯｼｬ	2	
6	239A2-12021		RUBBER	ﾗﾊﾞｰ	2	
7	214A2-12111		TANK,RESERVE	ﾀﾝｸ	1	INC.8,9
-	214A2-12121		TANK,RESERVE	ﾀﾝｸ	1	[OKM] INC.8,9
8	214A2-13001		CAP	ｷｬｯﾌﾟ	1	
9	214A2-13011		PACKING	ﾊﾟｯｷﾝｸﾞ	1	
10	214A2-12141		BRACKET	ﾌﾞﾗｹｯﾄ	1	
11	214A2-42611		SCREW	ｽｸﾘｭ	2	
12	214A2-12201		CLIP	ｸﾘｯﾌﾟ	1	

FIG.8 RADIATOR HOSE

(F7Z22170) ﾗｼﾞｴｰﾀﾎｰｽ

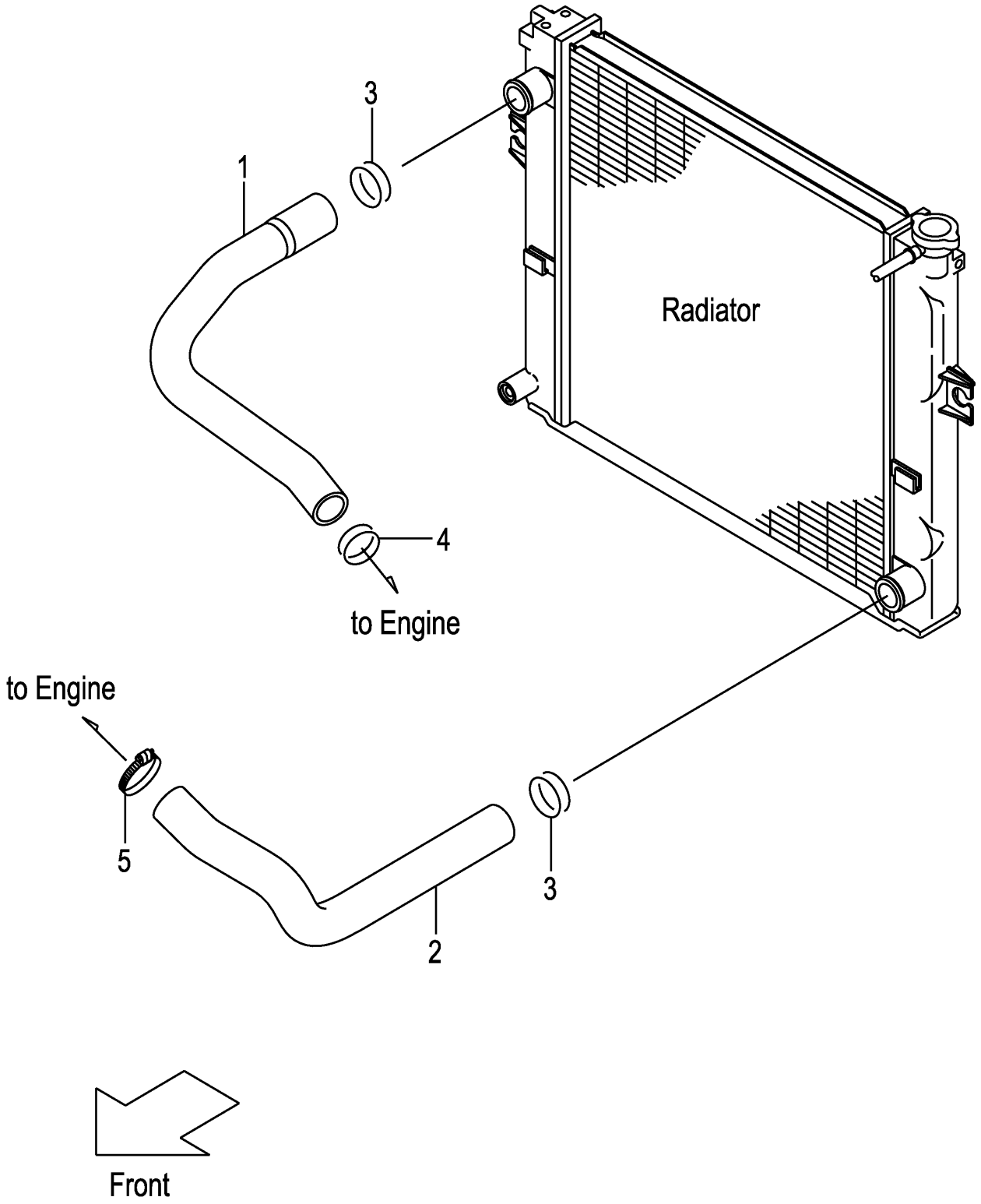

FIG.8

(F7Z22170)

A:FD20C3Z FD20T3Z FD25C3Z FD25T3Z

Item No	Part No.	Mark	Description		Req'd	Remarks : Serial No.
1	22U52-12001		HOSE,UPPER	ﾎｰｽ	1	
2	22U52-12011		HOSE,LOWER	ﾎｰｽ	1	
3	04911-00044		CLIP	ｸﾘｯﾌﾟ	2	
4	04911-00040		CLIP	ｸﾘｯﾌﾟ	1	
5	217M2-12221		CLAMP,HOSE	ｸﾗﾝﾌﾟ	1	

FIG.9 DUST SCREEN [DSR006][DSR008]

(F7Z22180) ﾀﾞｽﾄｽｸﾘｰﾝ

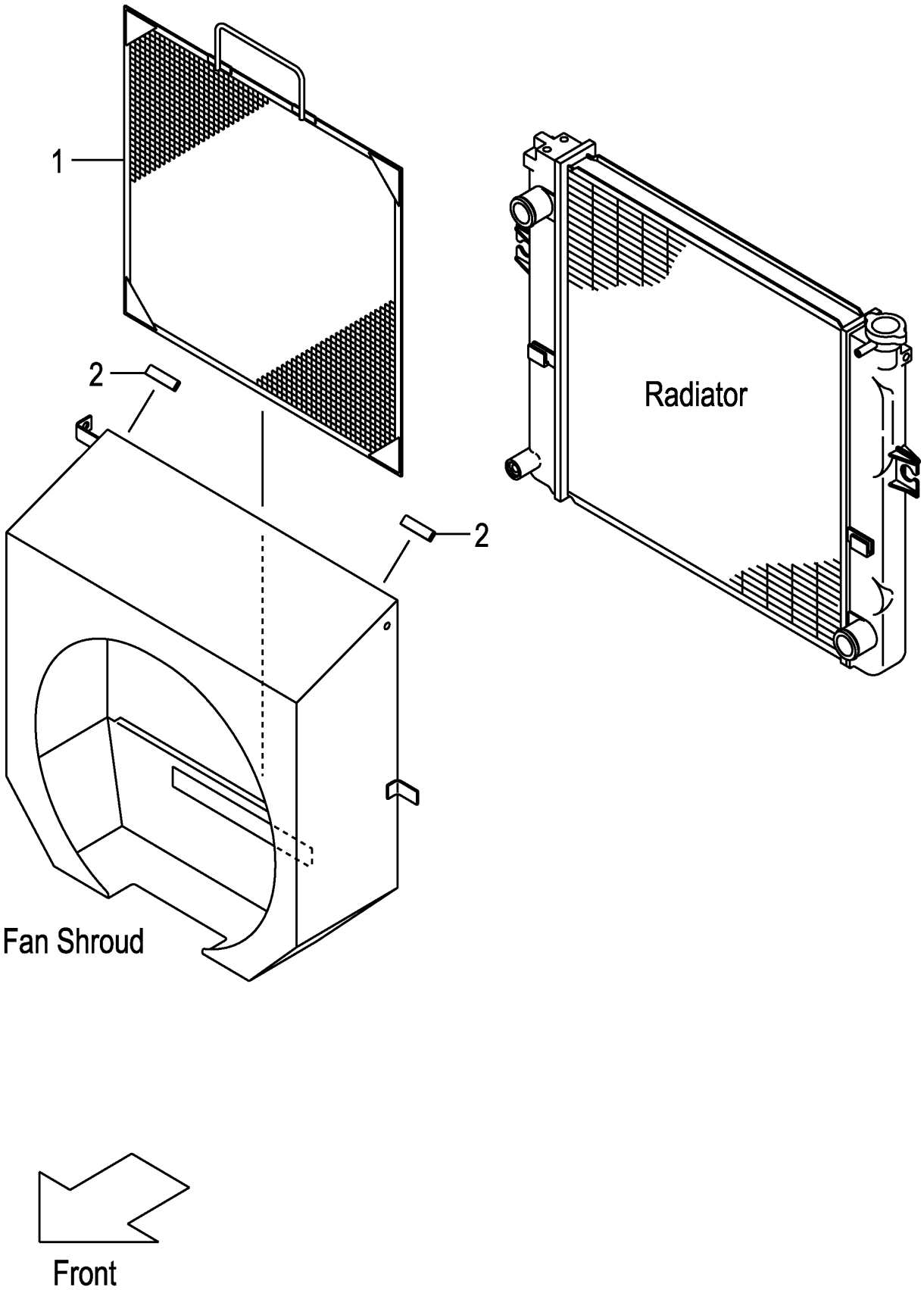

FIG.9

(F7Z22180)

A:FD20C3Z FD20T3Z FD25C3Z FD25T3Z

Item No	Part No.	Mark	Description		Req'd	Remarks : Serial No.
1	539A6-52051		SCREEN,DUST	ｽｸﾘｰﾝ	1	[DSR006]
-	539A6-52151		SCREEN,DUST	ｽｸﾘｰﾝ	1	[DSR008]
2	209P6-42831		EDGING	ｴｯｼﾞﾝｸﾞ	2	[DSR006][DSR008]

FIG.10 FUEL SYSTEM

(F7Z22220) フューエルシステム

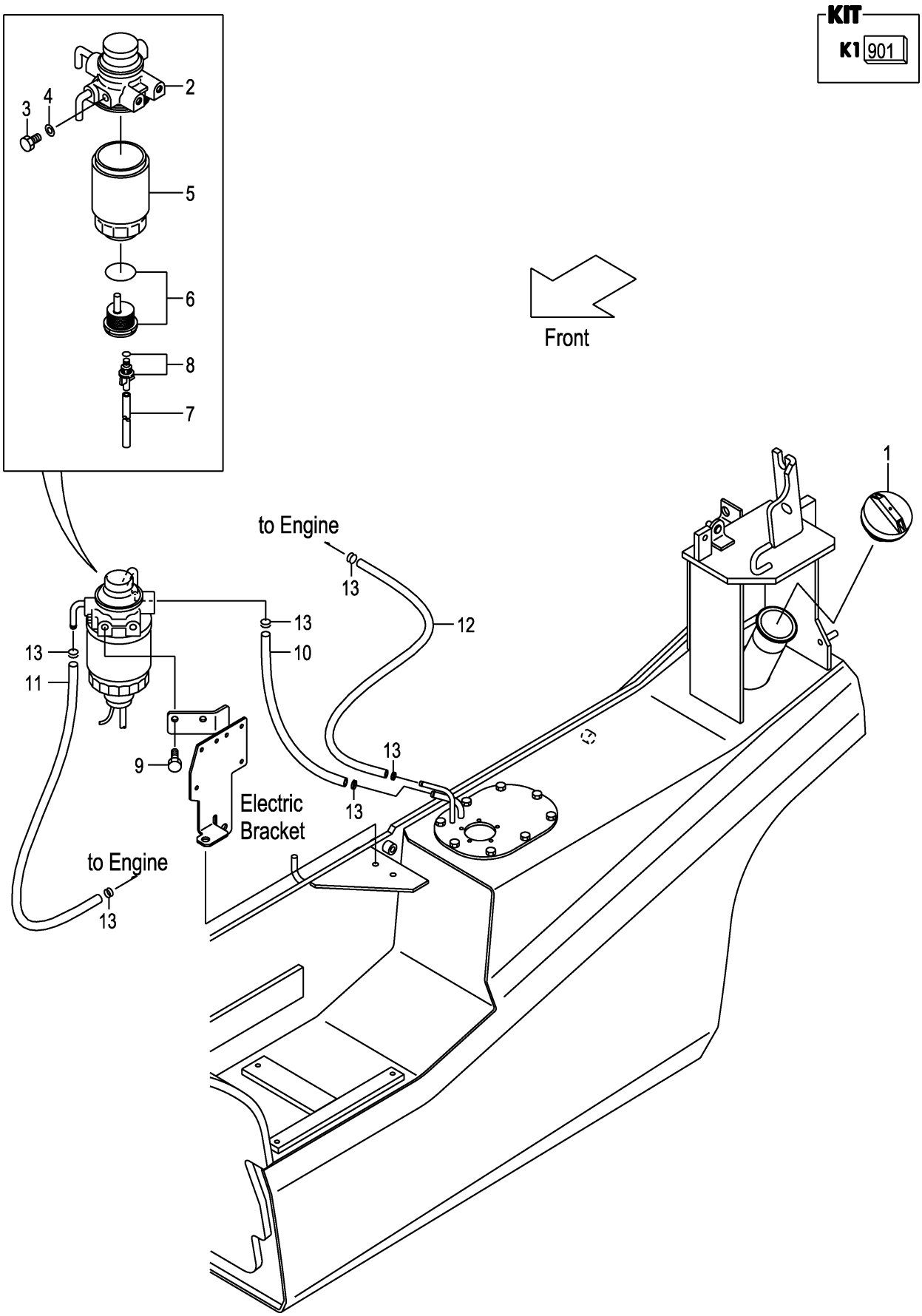

FIG.10

(F7Z22220)

A:FD20C3Z FD20T3Z FD25C3Z FD25T3Z

Item No	Part No.	Mark	Description		Req'd	Remarks : Serial No.
1	216G2-22051		CAP,FUEL	ｷｬｯﾌﾟ	1	
A1	24662-22032		FILTER-ASSY,FUEL	ﾌｨﾙﾀ	1	INC.2-8
901	Z-8-94367-294-0	K1	KIT,SENSOR	ｾﾝｻｷｯﾄ	1	INC.6-8
2	NO PART NO.	#	BODY	ﾎﾞﾃﾞｨ	1	
3	Z-8-94132-674-0		PLUG	ﾌﾟﾗｸﾞ	1	
4	Z-8-94132-675-0		GASKET	ｶﾞｽｹｯﾄ	1	
5	20801-02141		CARTRIDGE	ｶｰﾄﾘｯｼﾞ	1	
6	NO PART NO.	#*	SENSOR	ｾﾝｻ	1	
7	Z-8-94367-956-0	*	HOSE	ﾎｰｽ	1	
8	Z-8-94367-957-0	*	PLUG	ﾌﾟﾗｸﾞ	1	
9	01183-08016		BOLT	ﾎﾞﾙﾄ	2	
10	24662-22131		HOSE,FUEL,7.5X270	ﾎｰｽ	1	
11	214A2-22071		HOSE,FUEL,7.5X550	ﾎｰｽ	1	
12	23322-22011		HOSE,FUEL,6.5X330	ﾎｰｽ	1	
13	22192-22091		CLIP	ｸﾘｯﾌﾟ	6	

FIG.11 EXHAUST SYSTEM

(F7Z22310) エキゾーストシステム

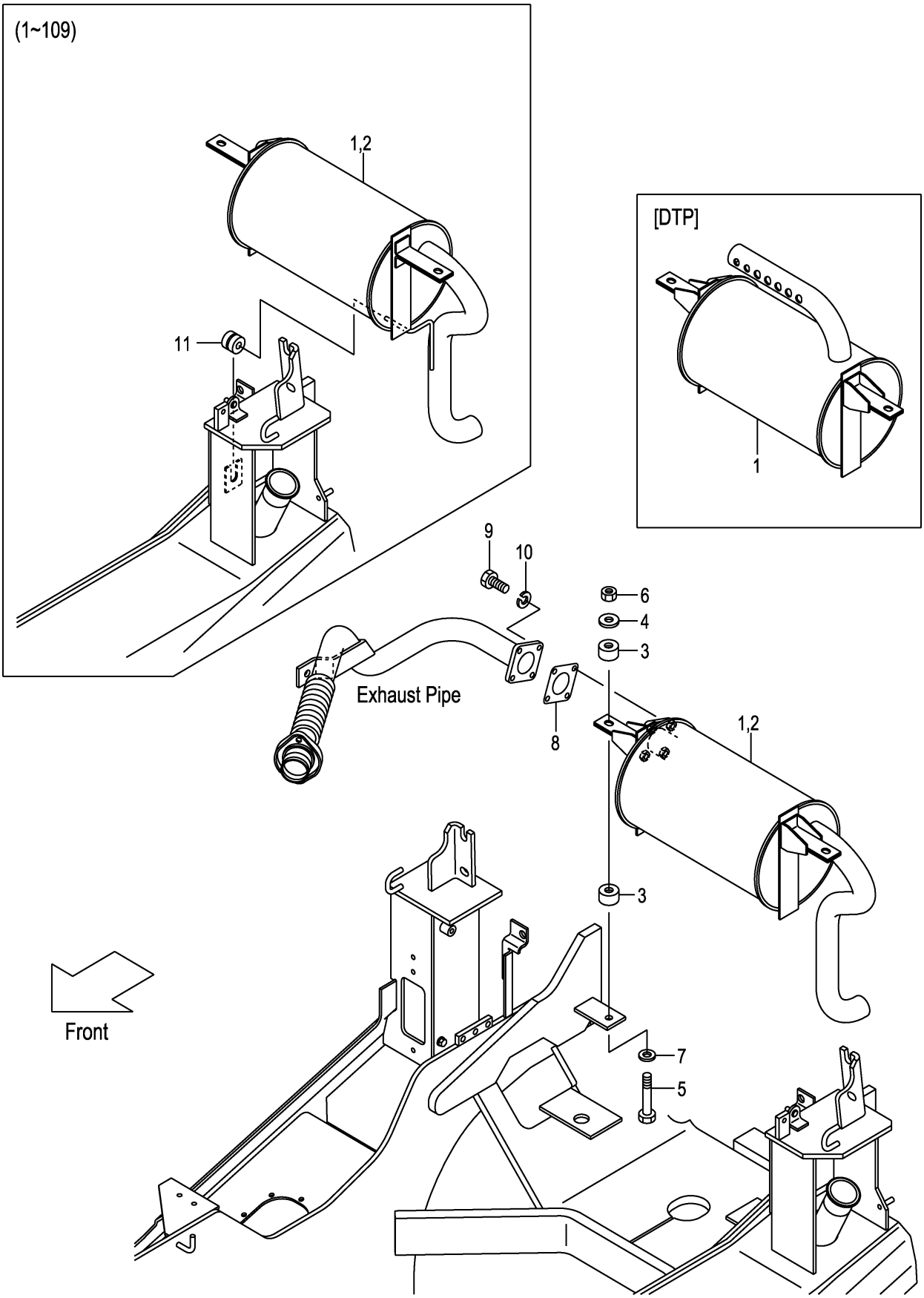

FIG.11

(F7Z22310)

A:FD20C3Z FD20T3Z FD25C3Z FD25T3Z

Item No	Part No.	Mark	Description		Req'd	Remarks : Serial No.
1	22N52-30101		MUFFLER,2T	ﾏﾌﾗ	1	
-	52N51-70101		MUFFLER,2T	ﾏﾌﾗ	1	[EPM] INC.2
-	52N51-70201		MUFFLER,2T	ﾏﾌﾗ	1	[CBM]
-	52N51-70301		MUFFLER	ﾏﾌﾗ	1	[DTP]
2	532A1-70201		CATALYST	ｷｬﾀﾘｽﾄ	1	[EPM]
3	22252-32241		RUBBER,CUSHION	ﾗﾊﾞｰ	4	
4	22252-32251		WASHER	ﾜｯｼｬ	2	
5	21232-32551		BOLT	ﾎﾞﾙﾄ	2	
6	23652-12051		NUT	ﾅｯﾄ	2	
7	02000-00010		WASHER	ﾜｯｼｬ	2	
8	217G2-32001		GASKET	ｶﾞｽｹｯﾄ	1	
9	01100-08030		BOLT	ﾎﾞﾙﾄ	4	
10	02010-00008		WASHER	ﾜｯｼｬ	4	
11	214A2-12001		RUBBER	ﾗﾊﾞｰ	1	1-109

FIG.12 EXHAUST SYSTEM [TUE]

(F7Z22330) エキゾーストシステム

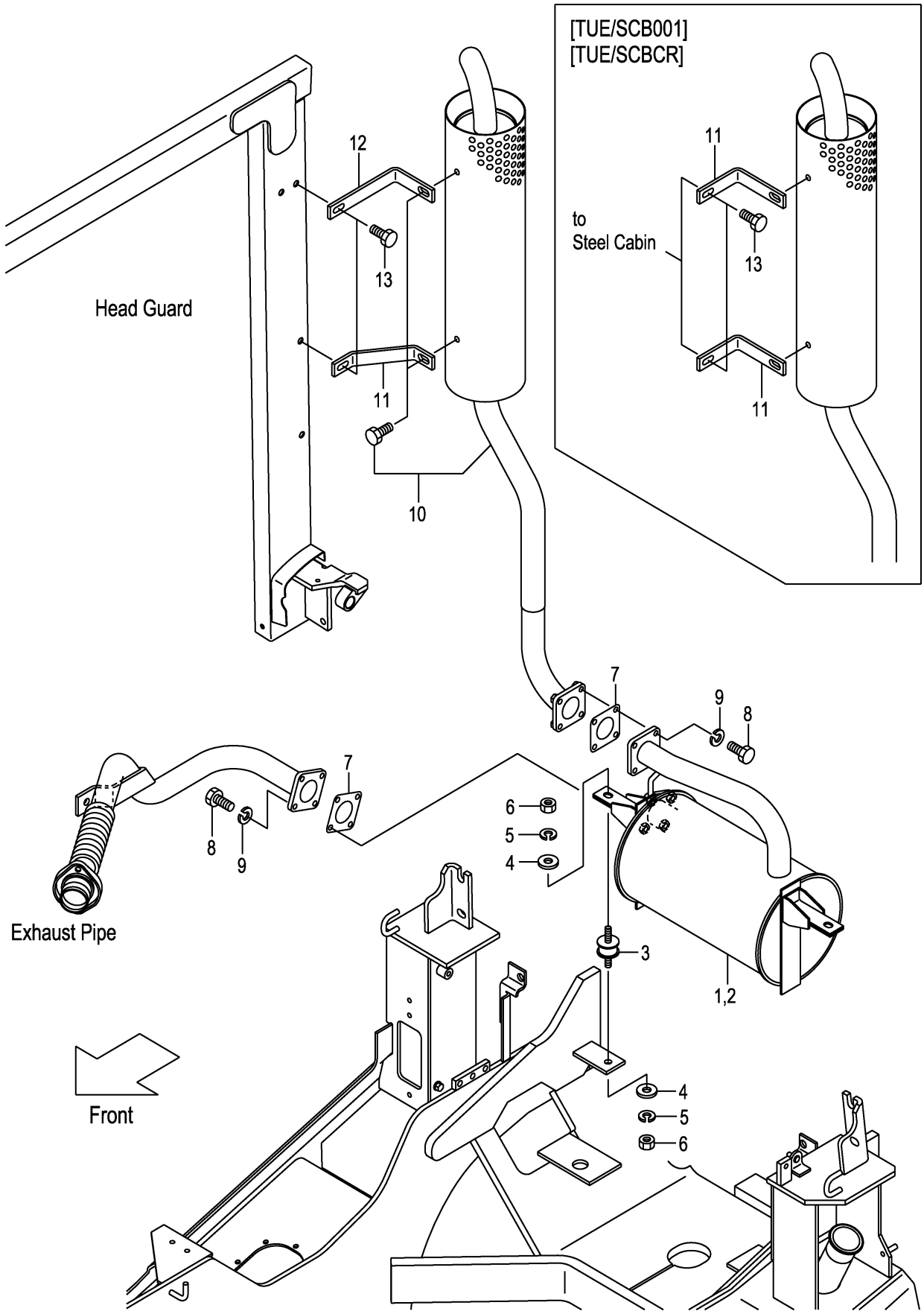

FIG.12

(F7Z22330)

A:FD20C3Z FD20T3Z FD25C3Z FD25T3Z

Item No	Part No.	Mark	Description		Req'd	Remarks : Serial No.
1	52N50-80201		MUFFLER	ﾏﾌﾗ	1	[TUE]
-	52N50-80211		MUFFLER	ﾏﾌﾗ	1	[EPM/TUE] INC.2
-	52N50-80221		MUFFLER	ﾏﾌﾗ	1	[CBM/TUE]
2	532A1-70201		CATALYST	ｷｬﾀﾘｽﾄ	1	[EPM/TUE]
3	539A0-82201		RUBBER	ﾗﾊﾞｰ	2	[TUE]
4	124T3-43041		PLATE	ﾌﾟﾚｰﾄ	4	[TUE]
5	02010-00008		WASHER	ﾜｯｼｬ	4	[TUE]
6	01400-00008		NUT	ﾅｯﾄ	4	[TUE]
7	217G2-32001		GASKET	ｶﾞｽｹｯﾄ	2	[TUE]
8	01181-08025		BOLT	ﾎﾞﾙﾄ	8	[TUE]
9	02000-00008		WASHER	ﾜｯｼｬ	8	[TUE]
10	52N50-80301		MUFFLER,VERTICAL	ﾏﾌﾗ	1	[TUE]
11	52N50-82001		STAY	ｽﾃｰ	1	[TUE]
-	52N50-82021		STAY	ｽﾃｰ	2	[TUE/SCB001][TUE/SCBCR]
12	52N50-82011		STAY	ｽﾃｰ	1	[TUE] (WITHOUT TUE/SCB001,TUE/SCBCR)
13	01185-08020		BOLT	ﾎﾞﾙﾄ	2	[TUE]

FIG.13 FRONT TUBE & JOINT

(F7Z22380) フロントチューブ&ジョイント

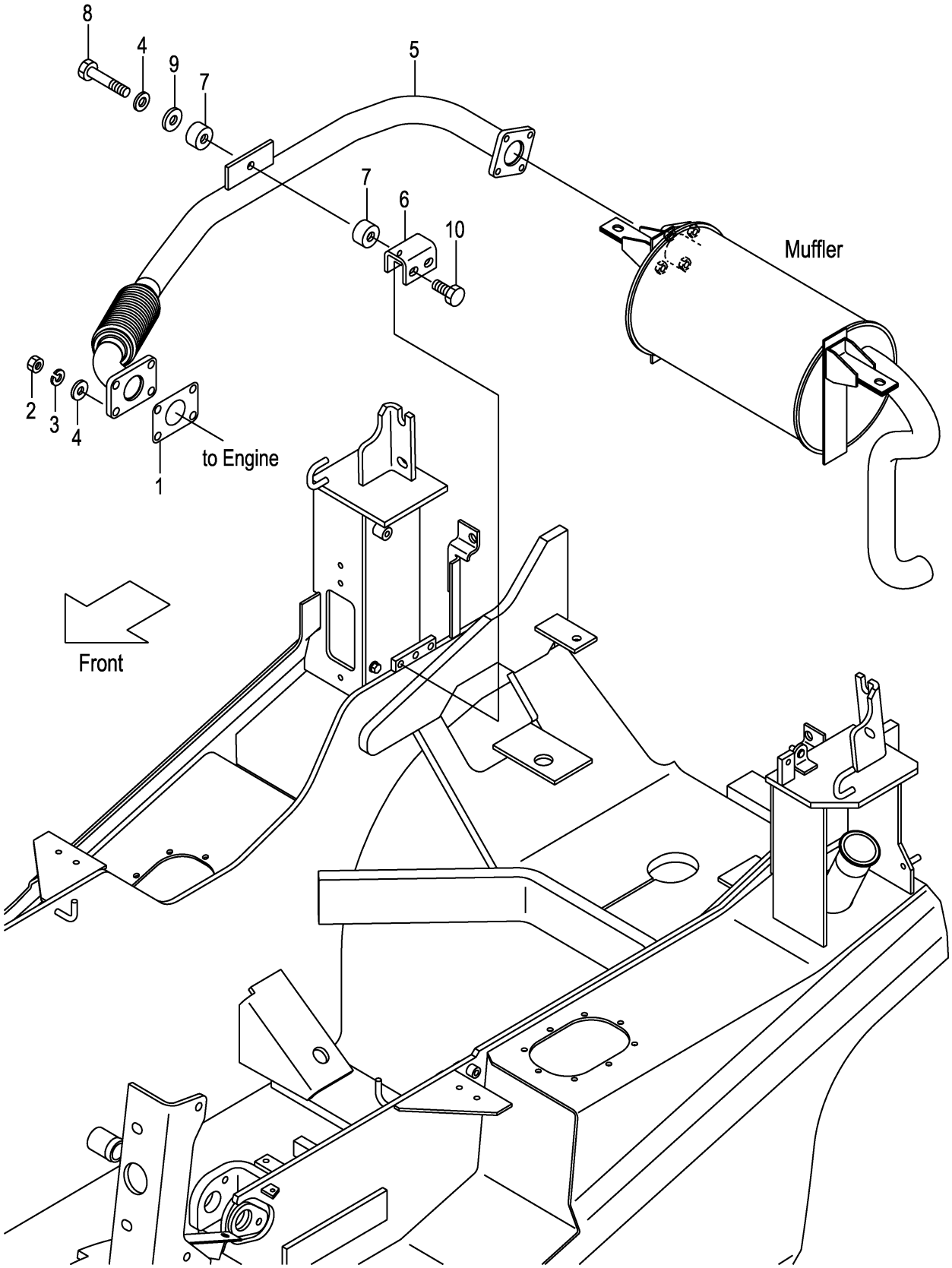

FIG.13

(F7Z22380)

A:FD20C3Z FD20T3Z FD25C3Z FD25T3Z

Item No	Part No.	Mark	Description		Req'd	Remarks : Serial No.
1	224G2-32011		GASKET	ｶﾞｽｹｯﾄ	1	
2	01400-20010		NUT	ﾅｯﾄ	4	
3	02010-00010		WASHER	ﾜｯｼｬ	4	
4	02000-00010		WASHER	ﾜｯｼｬ	5	
5	22U52-30111		PIPE,EXHAUST,C240	ﾊﾟｲﾌﾟ	1	
6	22N52-32021		BRACKET	ﾌﾞﾗｹｯﾄ	1	
7	22252-32241		RUBBER,CUSHION	ﾗﾊﾞｰ	2	
8	21232-32551		BOLT	ﾎﾞﾙﾄ	1	
9	23451-02011		WASHER	ﾜｯｼｬ	1	
10	01186-10020		BOLT	ﾎﾞﾙﾄ	2	

FIG.14 COMBINATION METER

(F7Z22410) コンビネーションメータ

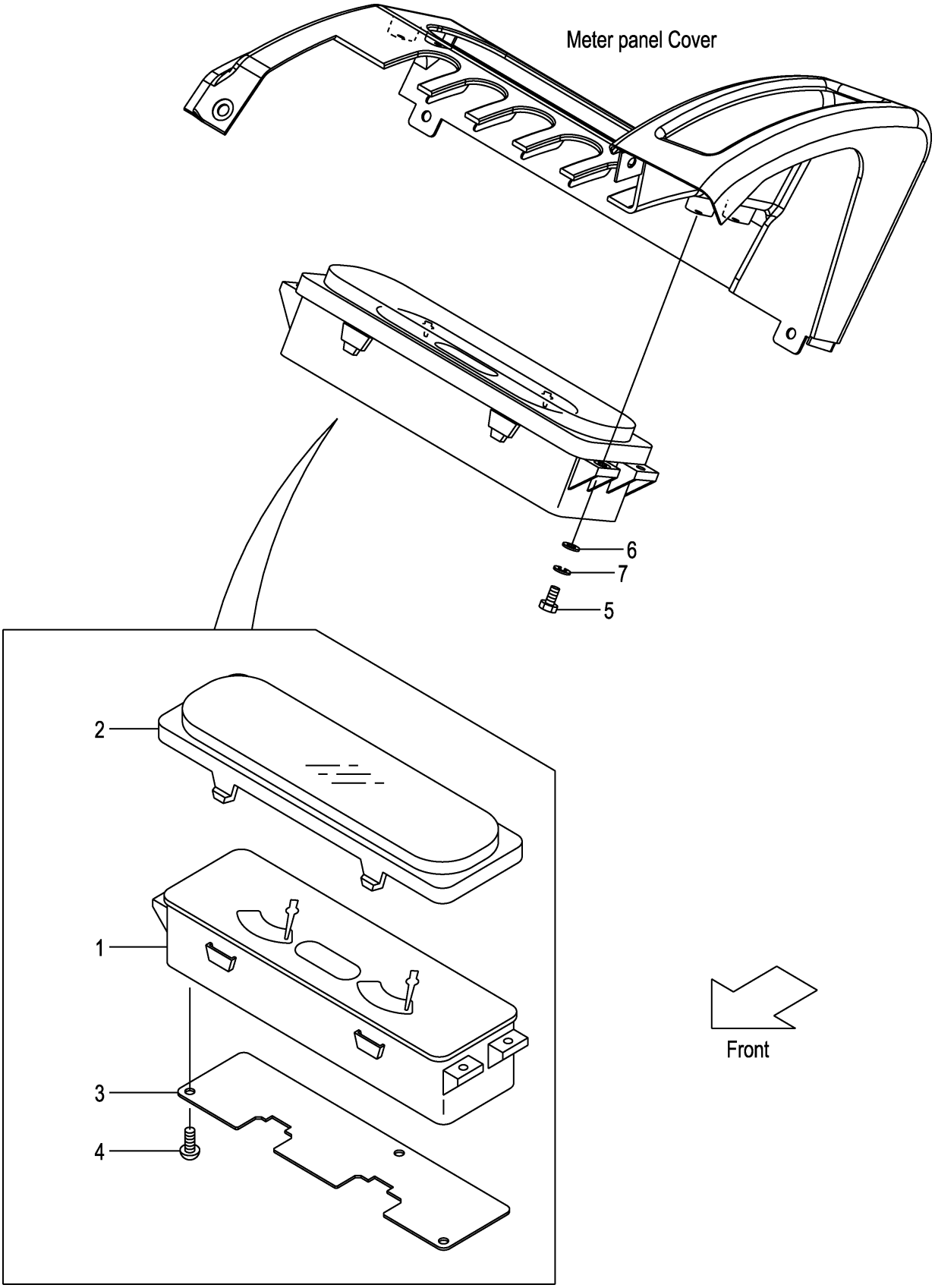

FIG.14

(F7Z22410)

A:FD20C3Z FD20T3Z FD25C3Z FD25T3Z

Item No	Part No.	Mark	Description	Req'd	Remarks : Serial No.
A1	22N52-40301		METER-ASSY,COMBINATION ｺﾝﾋﾞﾈｰｼｮﾝﾒｰﾀｱｯｾﾝ	1	INC.1-4
-	52N56-20101		METER-ASSY,COMBINATION ｺﾝﾋﾞﾈｰｼｮﾝﾒｰﾀｱｯｾﾝ	1	[OKM][SIL] INC.1-4
1	NO PART NO.	#	METER,COMBINATION ﾒｰﾀ	1	
-	NO PART NO.	#	METER,COMBINATION ﾒｰﾀ	1	[OKM][SIL]
2	22N52-42501		COVER ｶﾊﾞｰ	1	
3	22N52-42511		PLATE ﾌﾟﾚｰﾄ	1	
4	01043-03010		SCREW ｽｸﾘｭ	3	
5	01100-04012		BOLT ﾎﾞﾙﾄ	4	1-109
-	01185-04012		BOLT ﾎﾞﾙﾄ	4	110-
6	02000-00004		WASHER ﾜｯｼｬ	4	1-109
7	02010-00004		WASHER ﾜｯｼｬ	4	1-109

FIG.15 FRONT GUARD WIRE HARNESS (CLUTCH)

(F7Z22420) ﾌﾛﾝﾄｶﾞｰﾄﾞﾜｲﾔﾊｰﾈｽ

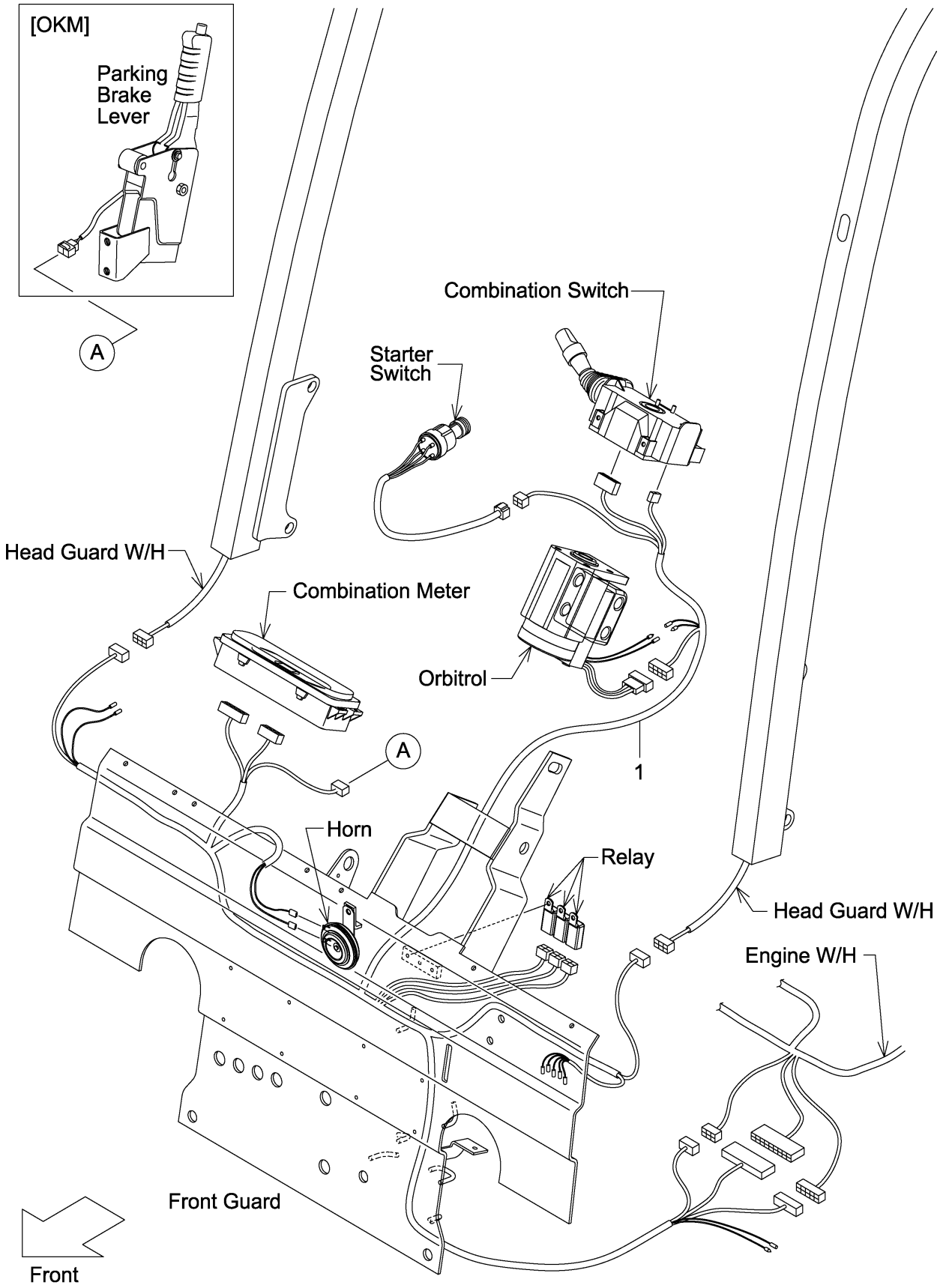

FIG.15

(F7Z22420)

A:FD20C3Z FD25C3Z

Item No	Part No.	Mark	Description	Req'd	Remarks : Serial No.
1	22N42-42201		WIRE-HARNESS,F.GUARD ﾜｲﾔﾊｰﾈｽ	1	
-	52N43-72101		WIRE-HARNESS,F.GUARD ﾜｲﾔﾊｰﾈｽ	1	[FC]

FIG.16 FRONT GUARD WIRE HARNESS (TOR-CON)

(F7Z22430) ﾌﾛﾝﾄｶﾞｰﾄﾞﾜｲﾔﾊｰﾈｽ

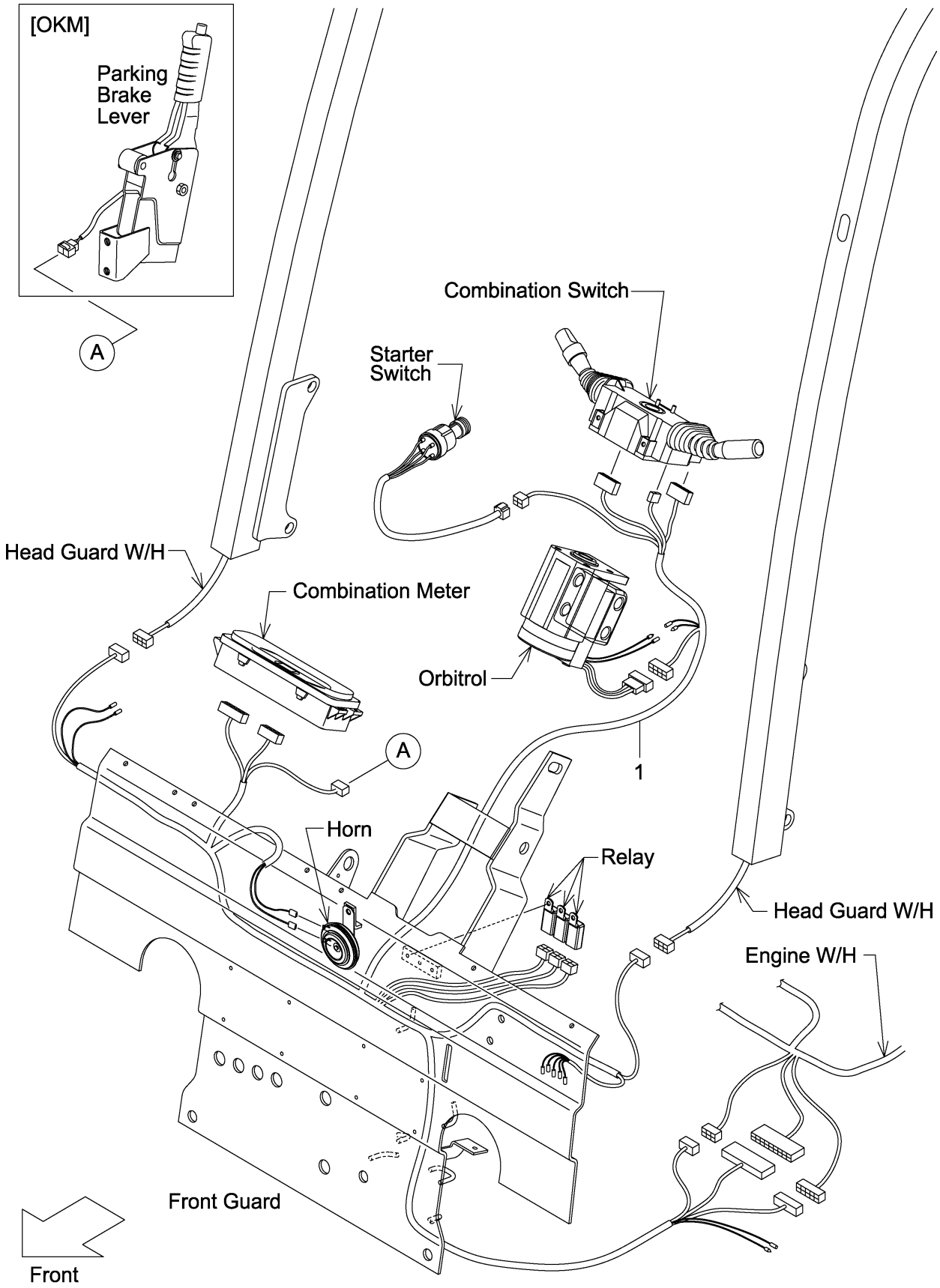

FIG.16

(F7Z22430)

A:FD20T3Z FD25T3Z

Item No	Part No.	Mark	Description	Req'd	Remarks : Serial No.
1	22N52-42201		WIRE-HARNESS,F.GUARD ﾜｲﾔﾊｰﾈｽ	1	
-	52N53-72101		WIRE-HARNESS,F.GUARD ﾜｲﾔﾊｰﾈｽ	1	[FC]
-	52N52-32001		WIRE-HARNESS,F.GUARD ﾜｲﾔﾊｰﾈｽ	1	[LCR]
-	52N53-72301		WIRE-HARNESS,F.GUARD ﾜｲﾔﾊｰﾈｽ	1	[FC/LCR]

FIG.17 COMBINATION SWITCH (CLUTCH)

(F7Z22440) コンビネーションスイッチ

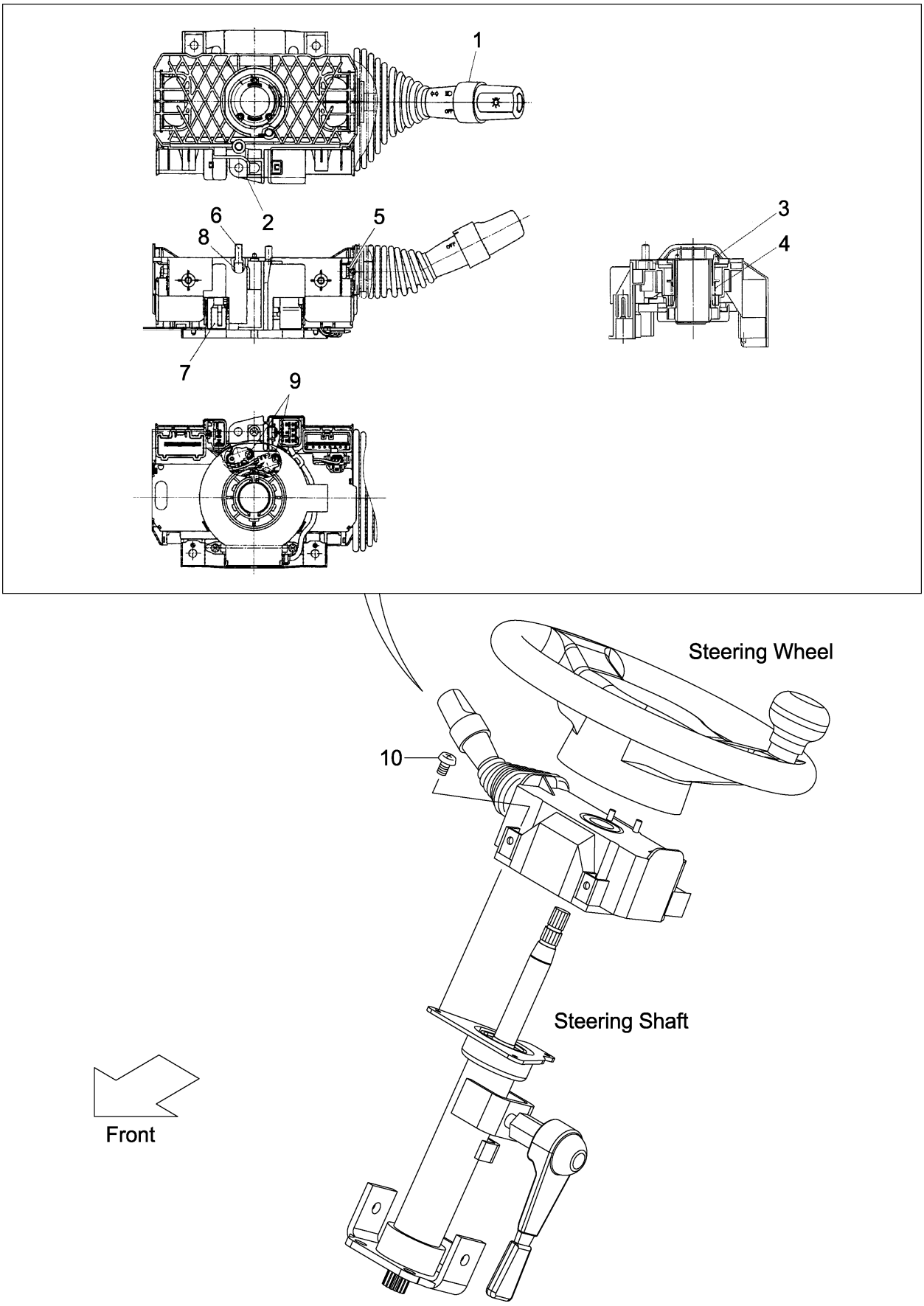

FIG.17

(F7Z22440)

A:FD20C3Z FD25C3Z

Item No	Part No.	Mark	Description	Req'd	Remarks : Serial No.
A1	239A2-40501		SWITCH-ASSY,COMBINATION ｺﾝﾋﾞﾈｰｼｮﾝｽｲｯﾁｱｯｾﾝ	1	INC.1-9
1	280C2-42331		SWITCH,TURN-SIGNAL ｽｲｯﾁ	1	
2	NO PART NO.	#	BODY ﾎﾞﾃﾞｨ	1	
3	NO PART NO.	#	CAM,CANCEL,RH ｶﾑ	1	
4	NO PART NO.	#	SPRING ｽﾌﾟﾘﾝｸﾞ	1	
5	NO PART NO.	#	SCREW ｽｸﾘｭ	4	
6	280C2-42351		CONTACT,HORN ｺﾝﾀｸﾄ	2	
7	NO PART NO.	#	CODE,CP-HORN ｺｰﾄﾞ	1	
8	NO PART NO.	#	SPRING ｽﾌﾟﾘﾝｸﾞ	2	
9	NO PART NO.	#	SCREW ｽｸﾘｭ	2	
10	01033-05014		SCREW ｽｸﾘｭ	3	

FIG.18 COMBINATION SWITCH (TOR-CON)

(F7Z22450) コンビネーションスイッチ

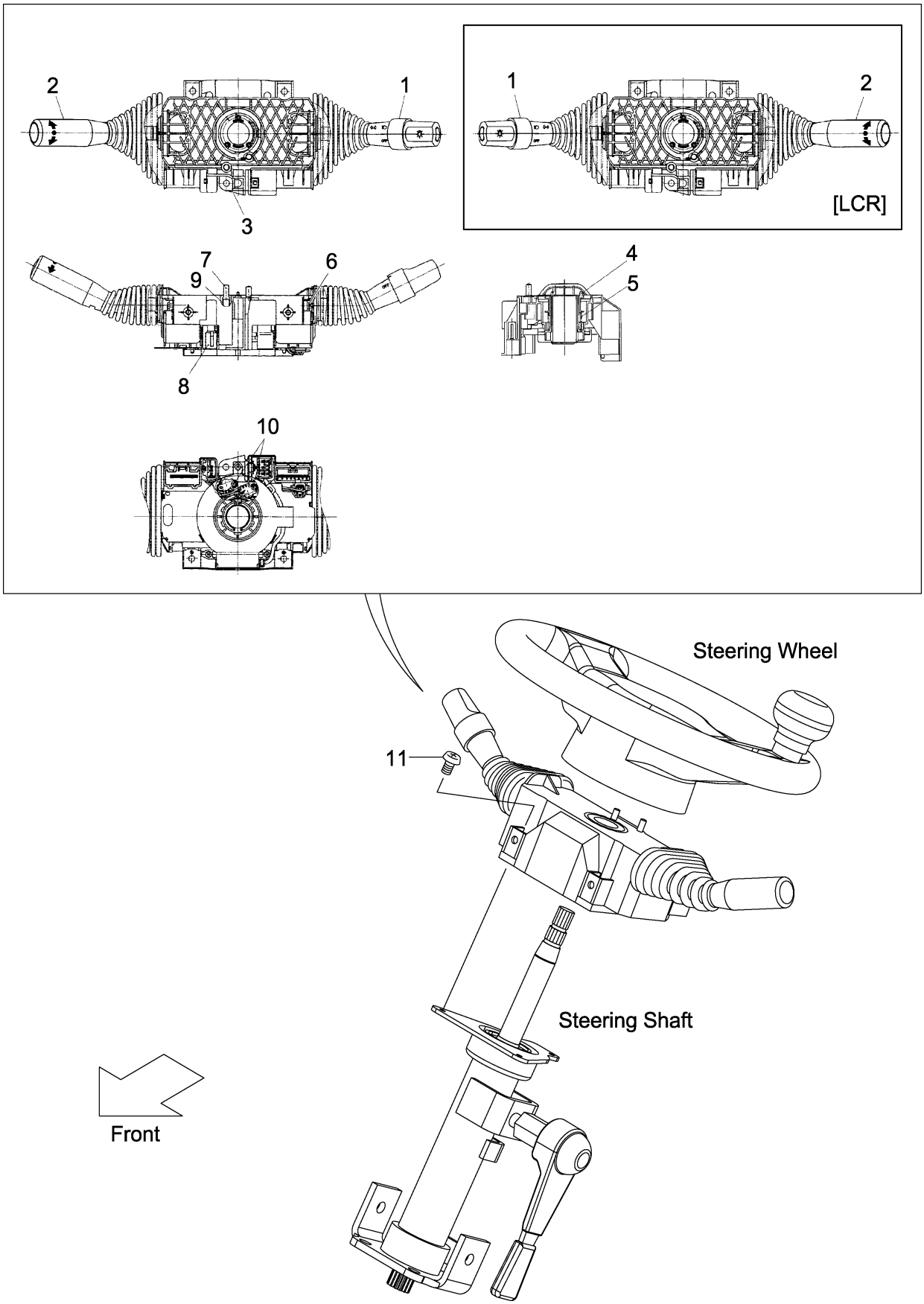

FIG.18

(F7Z22450)

A:FD20T3Z FD25T3Z

Item No	Part No.	Mark	Description	Req'd	Remarks : Serial No.
A1	209K2-40501		SWITCH-ASSY,COMBINATION ｺﾝﾋﾞﾈｰｼｮﾝｽｲｯﾁｱｯｾﾝ	1	INC.1-10
-	509K2-30101		SWITCH-ASSY,COMBINATION ｺﾝﾋﾞﾈｰｼｮﾝｽｲｯﾁｱｯｾﾝ	1	[LCR] INC.1-10
1	280C2-42331		SWITCH,TURN-SIGNAL ｽｲｯﾁ	1	
-	280C2-42301		SWITCH,TURN-SIGNAL ｽｲｯﾁ	1	[LCR]
2	280C2-42341		SWITCH,DIRECTION ｽｲｯﾁ	1	
-	280C2-42311		SWITCH,DIRECTION ｽｲｯﾁ	1	[LCR]
3	NO PART NO.	#	BODY ﾎﾞﾃﾞｨ	1	
4	NO PART NO.	#	CAM,CANCEL,RH ｶﾑ	1	
-	NO PART NO.	#	CAM,CANCEL,RH ｶﾑ	1	[LCR]
5	NO PART NO.	#	SPRING ｽﾌﾟﾘﾝｸﾞ	1	
6	NO PART NO.	#	SCREW ｽｸﾘｭ	4	
7	280C2-42351		CONTACT,HORN ｺﾝﾀｸﾄ	2	
8	NO PART NO.	#	CODE,CP-HORN ｺｰﾄﾞ	1	
9	NO PART NO.	#	SPRING ｽﾌﾟﾘﾝｸﾞ	2	
10	NO PART NO.	#	SCREW ｽｸﾘｭ	2	
11	01033-05014		SCREW ｽｸﾘｭ	3	

FIG.19 ELECTRIC PARTS (CLUTCH)

(F7Z22480) エレクトリックパーツ

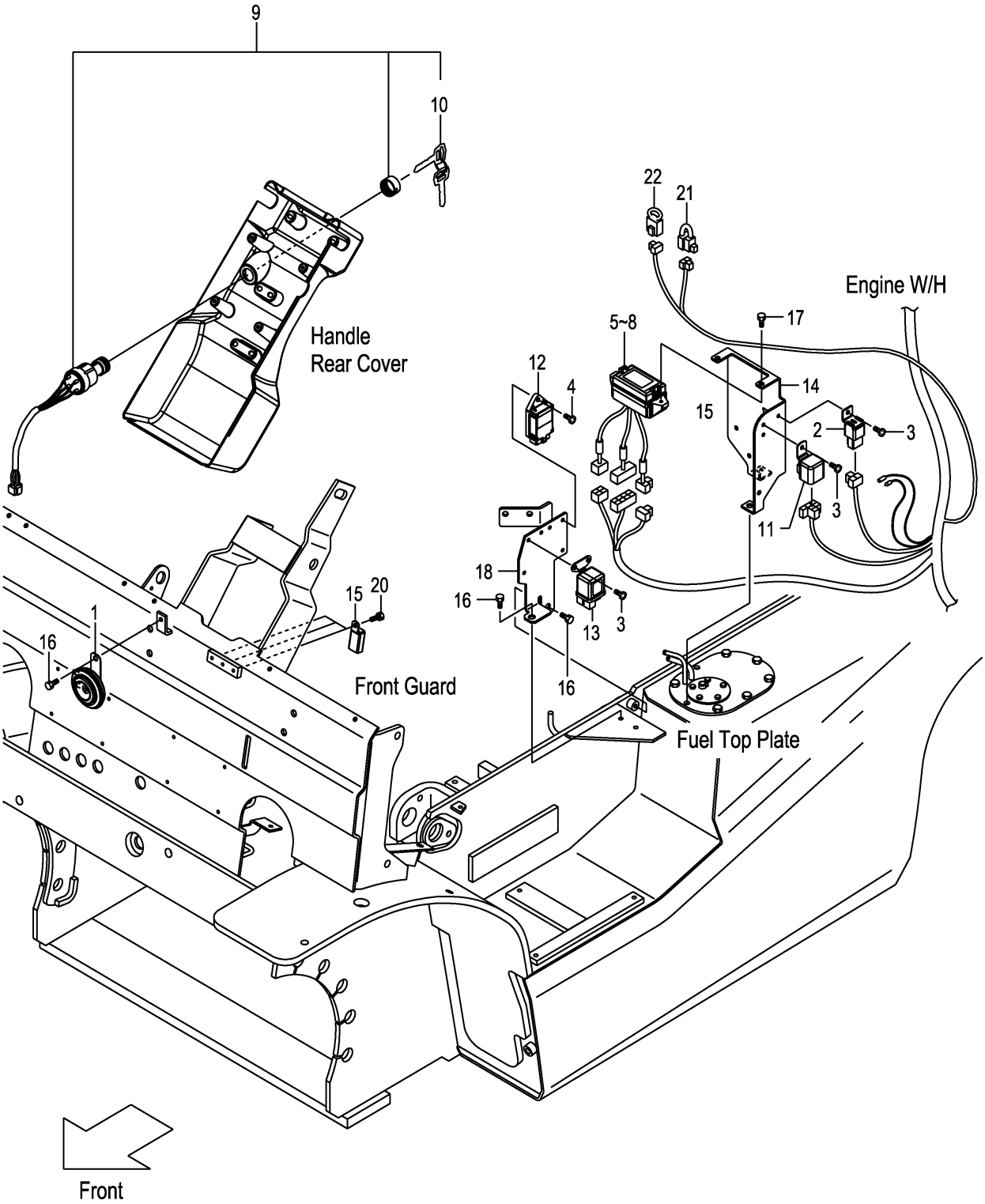

FIG.19

(F7Z22480)

A:FD20C3Z FD25C3Z

Item No	Part No.	Mark	Description		Req'd	Remarks : Serial No.
1	216G2-43651		HORN	ﾎｰﾝ	1	
2	216G2-43711		UNIT,FLASHER	ﾕﾆｯﾄ	1	
3	214A2-42611		SCREW	ｽｸﾘｭ	4	
4	214A2-42621		SCREW	ｽｸﾘｭ	1	
5	22N52-42101		BOX,FUSE	ﾎﾞｯｸｽ	1	INC.6-8
6	22N52-42311		FUSE,3A	ﾋｭｰｽﾞ	5	
7	22N52-42321		FUSE,7.5A	ﾋｭｰｽﾞ	5	
8	22N52-42331		FUSE,15A	ﾋｭｰｽﾞ	3	
9	216G2-42311		SWITCH,STARTER	ｽｲｯﾁ	1	INC.10
10	216G2-43401		KEY,SPARE,511323	ｷｰ	1	(1SET=2PCS)
-	216G2-43411		KEY,SPARE,512421	ｷｰ	(1)	(1SET=2PCS)
-	216G2-43421		KEY,SPARE,513454	ｷｰ	(1)	(1SET=2PCS)
11	217G2-42301		RELAY,STARTER	ﾘﾚｰ	1	
12	239A2-42311		TIMER,QOS-3	ﾀｲﾏｰ	1	
13	239A2-42301		RELAY,GLOW-PLUG	ﾘﾚｰ	1	
14	22N52-42021		BRACKET,ELECTRIC	ﾌﾞﾗｹｯﾄ	1	
15	209K2-42351		RELAY,1A	ﾘﾚｰ	3	
16	01185-08016		BOLT	ﾎﾞﾙﾄ	3	
17	01185-06016		BOLT	ﾎﾞﾙﾄ	2	
18	22N52-42031		BRACKET,ELECTRIC	ﾌﾞﾗｹｯﾄ	1	
19	04913-10200	+	BAND	ﾊﾞﾝﾄﾞ	4	
20	01183-06010		BOLT	ﾎﾞﾙﾄ	3	
21	22N52-43001		RESISTOR	ﾚｼﾞｽﾀ	1	
22	21152-42091		DIODE	ﾀﾞｲｵｰﾄﾞ	1	

FIG.20 ELECTRIC PARTS (TOR-CON)

(F7Z22490) エレクトリックパーツ

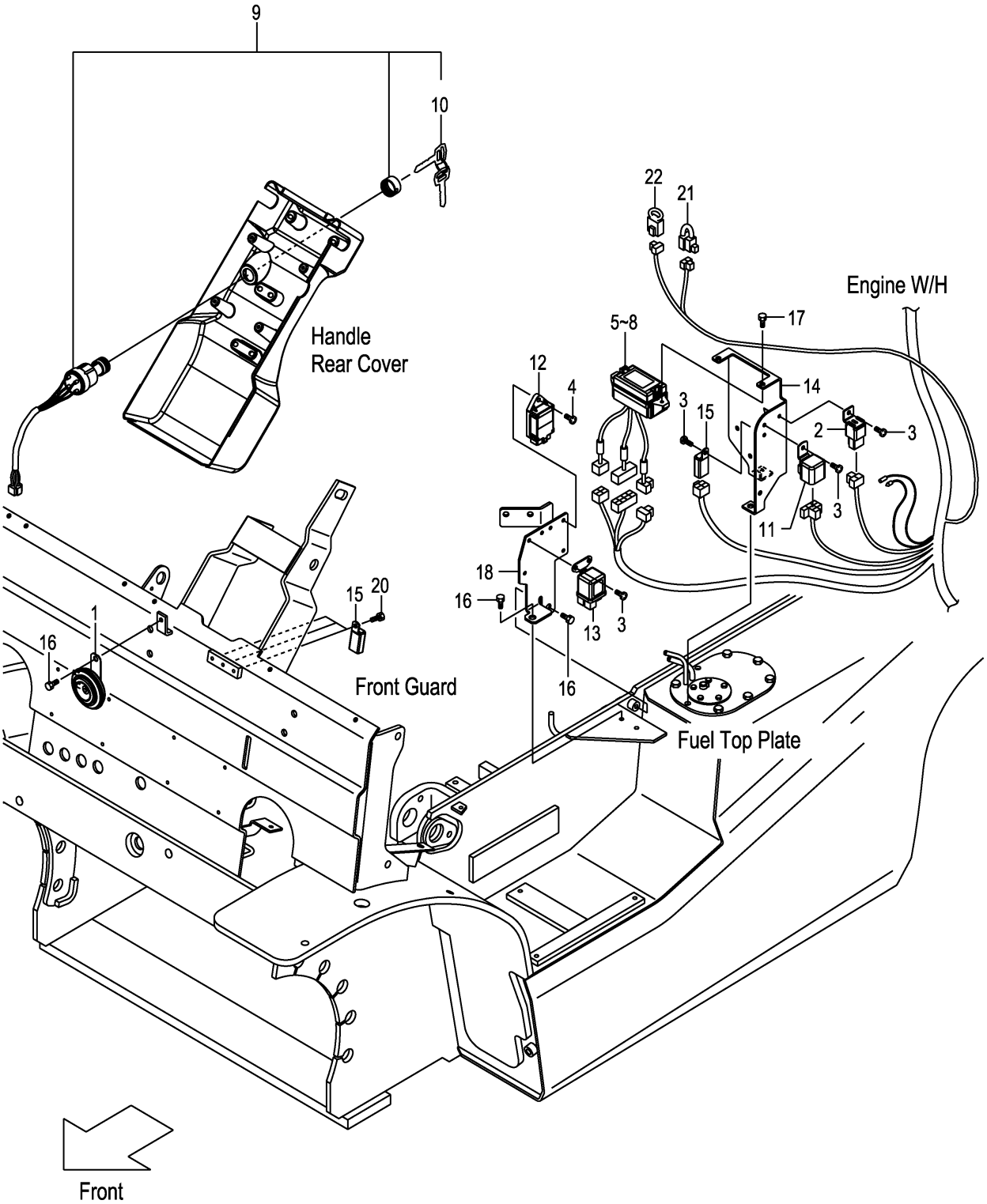

A:FD20T3Z FD25T3Z

Item No	Part No.	Mark	Description		Req'd	Remarks : Serial No.
1	216G2-43651		HORN	ﾎｰﾝ	1	
2	216G2-43711		UNIT,FLASHER	ﾕﾆｯﾄ	1	
3	214A2-42611		SCREW	ｽｸﾘｭ	5	
4	214A2-42621		SCREW	ｽｸﾘｭ	1	
5	22N52-42101		BOX,FUSE	ﾎﾞｯｸｽ	1	INC.6-8
6	22N52-42311		FUSE,3A	ﾋｭｰｽﾞ	5	
7	22N52-42321		FUSE,7.5A	ﾋｭｰｽﾞ	5	
8	22N52-42331		FUSE,15A	ﾋｭｰｽﾞ	3	
9	216G2-42311		SWITCH,STARTER	ｽｲｯﾁ	1	INC.10
10	216G2-43401		KEY,SPARE,511323	ｷｰ	1	(1SET=2PCS)
-	216G2-43411		KEY,SPARE,512421	ｷｰ	(1)	(1SET=2PCS)
-	216G2-43421		KEY,SPARE,513454	ｷｰ	(1)	(1SET=2PCS)
11	217G2-42301		RELAY,STARTER	ﾘﾚｰ	1	
12	239A2-42311		TIMER,QOS-3	ﾀｲﾏｰ	1	
13	239A2-42301		RELAY,GLOW-PLUG	ﾘﾚｰ	1	
14	22N52-42021		BRACKET,ELECTRIC	ﾌﾞﾗｹｯﾄ	1	
15	209K2-42351		RELAY,1A	ﾘﾚｰ	4	
16	01185-08016		BOLT	ﾎﾞﾙﾄ	3	
17	01185-06016		BOLT	ﾎﾞﾙﾄ	2	
18	22N52-42031		BRACKET,ELECTRIC	ﾌﾞﾗｹｯﾄ	1	
19	04913-10200	+	BAND	ﾊﾞﾝﾄﾞ	4	
20	01183-06010		BOLT	ﾎﾞﾙﾄ	3	
21	22N52-43001		RESISTOR	ﾚｼﾞｽﾀ	1	
22	21152-42091		DIODE	ﾀﾞｲｵｰﾄﾞ	1	

FIG.21 ENGINE WIRE HARNESS (CLUTCH)

(F7Z224C0) エンジンワイヤハーネス

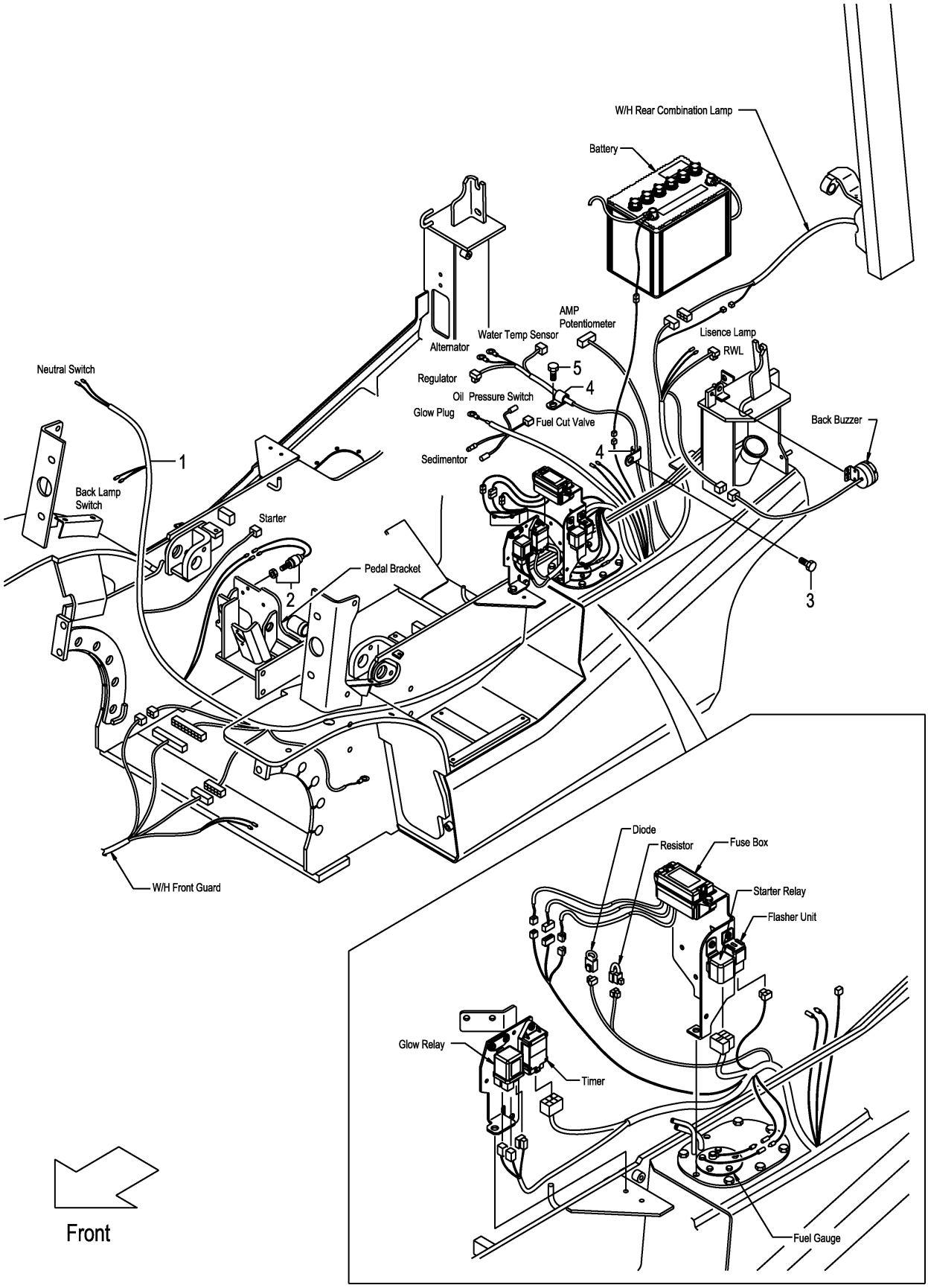

FIG.21

(F7Z224C0)

A:FD20C3Z FD25C3Z

Item No	Part No.	Mark	Description		Req'd	Remarks : Serial No.
1	22U42-42211		WIRE-HARNESS,ENGINE	ﾜｲﾔﾊｰﾈｽ	1	
2	23232-42072		SWITCH,STOP-LAMP	ｽｲｯﾁ	1	
3	01183-06016		BOLT	ﾎﾞﾙﾄ	1	
4	214A2-42331		CLIP	ｸﾘｯﾌﾟ	2	
5	01183-08016		BOLT	ﾎﾞﾙﾄ	1	

FIG.22 ENGINE WIRE HARNESS (TOR-CON)

(F7Z224D0) エンジンワイヤハーネス

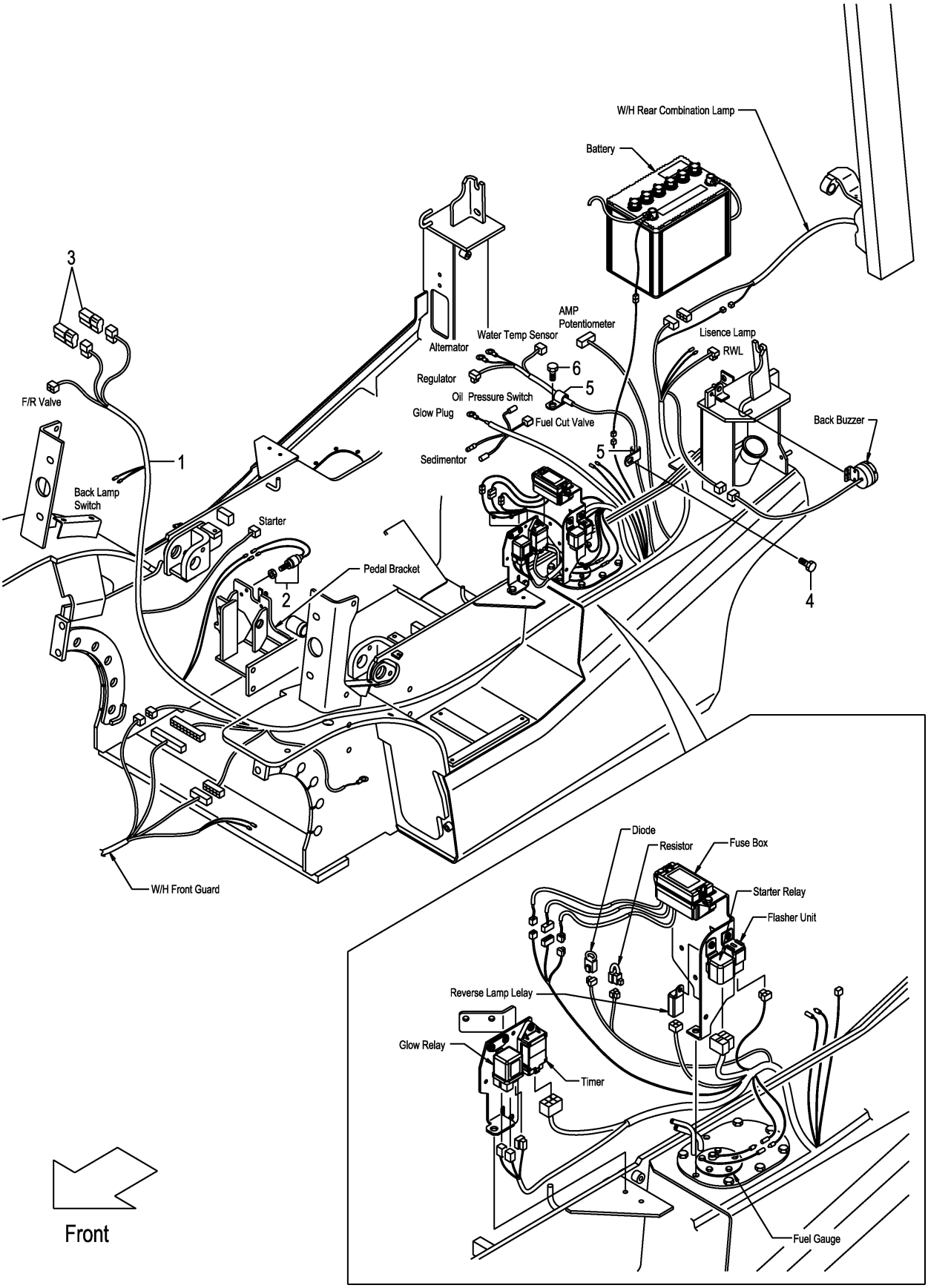

FIG.22

(F7Z224D0)

A:FD20T3Z FD25T3Z

Item No	Part No.	Mark	Description		Req'd	Remarks : Serial No.
1	22U52-42211		WIRE-HARNESS,ENGINE	ﾜｲﾔﾊｰﾈｽ	1	
2	23232-42072		SWITCH,STOP-LAMP	ｽｲｯﾁ	1	
3	230C2-42201		DIODE,3A	ﾀﾞｲｵｰﾄﾞ	2	
4	01183-06016		BOLT	ﾎﾞﾙﾄ	1	
5	214A2-42331		CLIP	ｸﾘｯﾌﾟ	2	
6	01183-08016		BOLT	ﾎﾞﾙﾄ	1	

FIG.23 BATTERY

(F7Z224F0) ﾊﾞｯﾃﾘ

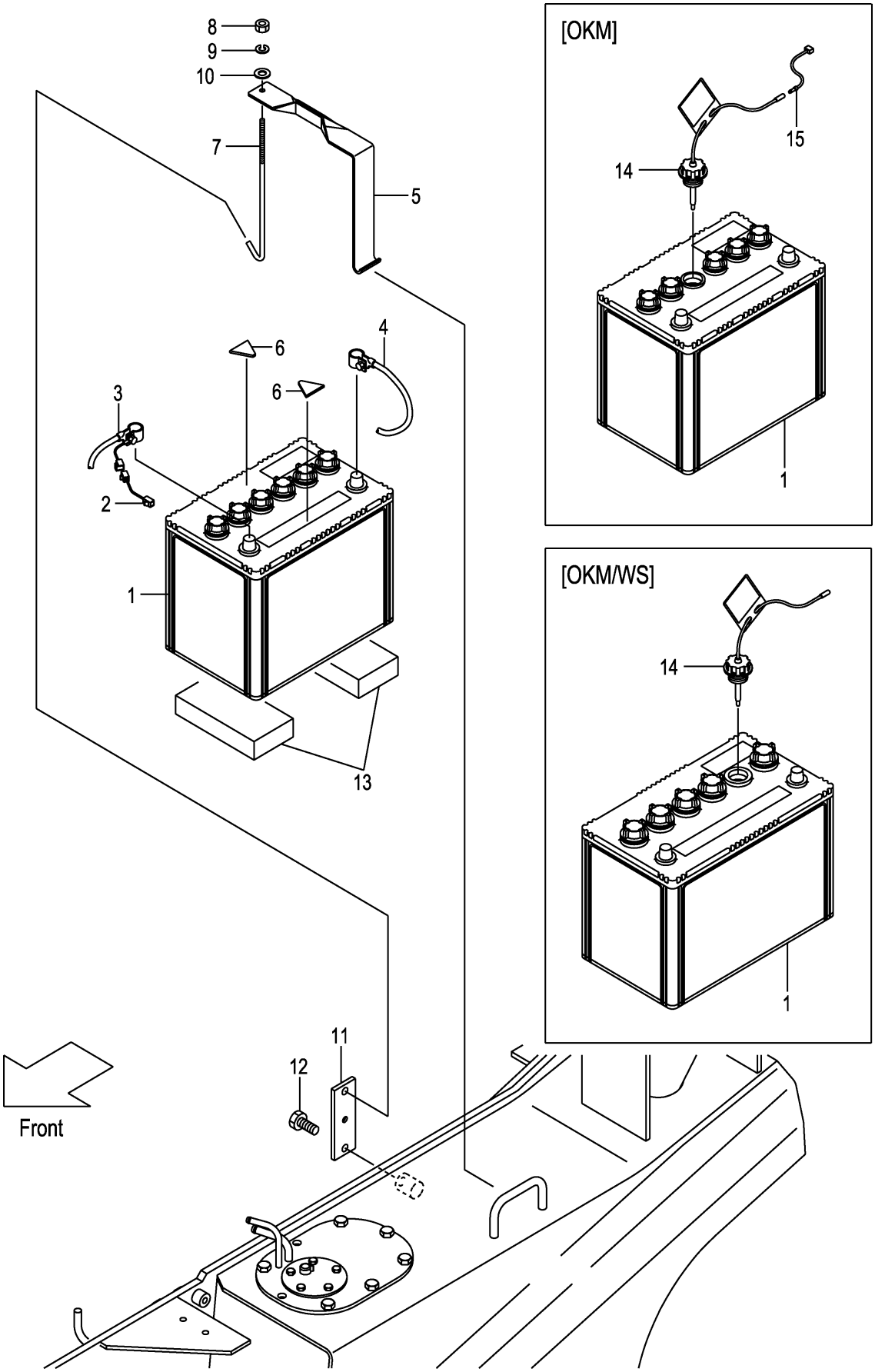

FIG.23

(F7Z224F0)

A:FD20C3Z FD20T3Z FD25C3Z FD25T3Z

Item No	Part No.	Mark	Description		Req'd	Remarks : Serial No.
1	58106-31011		BATTERY,WET,80D26R	ﾊﾞｯﾃﾘ	1	
-	534A7-02001		BATTERY,WET,115D31R	ﾊﾞｯﾃﾘ	1	[WS]
2	25592-42081		WIRE,FUSIBLE-LINK	ﾜｲﾔ	1	
3	22U52-42151		CABLE,BATTERY(+)	ｹｰﾌﾞﾙ	1	
4	238A2-42151		CABLE,BATTERY(-)	ｹｰﾌﾞﾙ	1	
5	217G2-42021		HOLDER,BATTERY	ﾎﾙﾀﾞ	1	
6	216G2-43111		RUBBER	ﾗﾊﾞｰ	2	
7	256C2-42231		BOLT,ANCHOR	ﾎﾞﾙﾄ	1	
8	01420-00006		NUT	ﾅｯﾄ	1	(-2005.7.4)
-	01400-00006		NUT	ﾅｯﾄ	1	(2005.7.5-)
9	02010-00006		WASHER	ﾜｯｼｬ	1	
10	23452-42181		WASHER	ﾜｯｼｬ	1	(-2005.7.4)
-	02000-00006		WASHER	ﾜｯｼｬ	1	(2005.7.5-)
11	22N52-42111		HOOK,ANCHOR-BOLT	ﾌｯｸ	1	
12	01185-08016		BOLT	ﾎﾞﾙﾄ	1	
13	22N52-42301		RUBBER	ﾗﾊﾞｰ	2	
14	521A2-42001		CAP,BATTERY	ｷｬｯﾌﾟ	1	[OKM]
-	522A2-42001		CAP,BATTERY	ｷｬｯﾌﾟ	1	[OKM/WS]
15	539A6-22021		WIRE,LEAD	ﾜｲﾔ	1	[OKM](WITHOUT OKM/WS)

FIG.24 HEAD LAMP & FRONT COMBINATION LAMP

(F7Z224G0) ﾍｯﾄﾞﾗﾝﾌﾟ&ﾌﾛﾝﾄｺﾝﾋﾞﾈｰｼｮﾝﾗﾝﾌﾟ

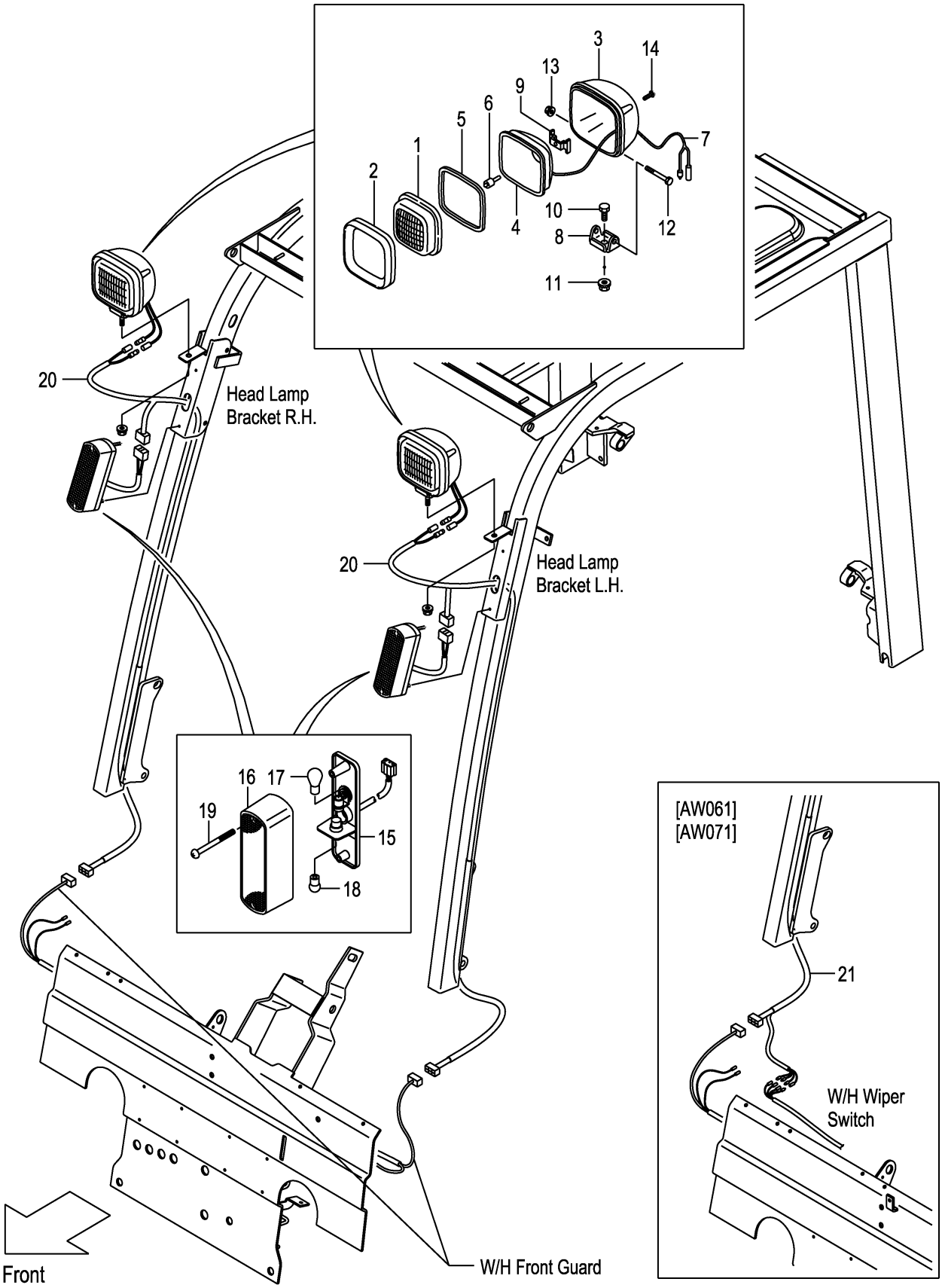

A:FD20C3Z FD20T3Z FD25C3Z FD25T3Z

Item No	Part No.	Mark	Description		Req'd	Remarks : Serial No.
A1	216G2-40602		LAMP-ASSY,HEAD	ﾍｯﾄﾞﾗﾝﾌﾟｱｯｾﾝ	2	INC.1-14
1	216G2-43502		LENS	ﾚﾝｽﾞ	2	
2	216G2-43631		RIM	ﾘﾑ	2	
3	NO PART NO.	#	HOUSING	ﾊｳｼﾞﾝｸﾞ	2	
4	NO PART NO.	#	REFLECTOR	ﾘﾌﾚｸﾀ	2	
5	216G2-43531		GASKET	ｶﾞｽｹｯﾄ	2	
6	216G2-43542		BULB,12V/55W	ﾊﾞﾙﾌﾞ	2	
7	216G2-43551		WIRE,LEAD	ﾜｲﾔ	2	
8	216G2-43562		BRACKET	ﾌﾞﾗｹｯﾄ	2	
9	216G2-43571		SPRING	ｽﾌﾟﾘﾝｸﾞ	2	
10	216G2-43582		BOLT	ﾎﾞﾙﾄ	2	
11	216G2-43592		NUT	ﾅｯﾄ	2	
12	216G2-43602		BOLT	ﾎﾞﾙﾄ	2	
13	216G2-43611		NUT	ﾅｯﾄ	2	
14	216G2-43622		SCREW	ｽｸﾘｭ	8	
A2	216G2-40701		LAMP-ASSY,FRONT-COMBINATION	ﾌﾛﾝﾄｺﾝﾋﾞﾈｰｼｮﾝﾗﾝﾌﾟｱｯｾﾝ	2	INC.15-19
15	NO PART NO.	#	BODY	ﾎﾞﾃﾞｨ	2	
16	216G2-40731		LENS	ﾚﾝｽﾞ	2	
17	216G2-40711		BULB,12V/27W	ﾊﾞﾙﾌﾞ	2	
18	216G2-40721		BULB,12V/10W	ﾊﾞﾙﾌﾞ	2	
19	NO PART NO.		SCREW	ｽｸﾘｭ	4	
20	239A2-42221		WIRE-HARNESS,H.GUARD	ﾜｲﾔﾊｰﾈｽ	2	
-	534A9-22211		WIRE-HARNESS,H.GUARD	ﾜｲﾔﾊｰﾈｽ	2	[HL][BKH]
-	239A2-42221		WIRE-HARNESS,H.GUARD	ﾜｲﾔﾊｰﾈｽ	1	[AW061][AW071]
21	52N55-42301		WIRE-HARNESS,H.GUARD	ﾜｲﾔﾊｰﾈｽ	1	[AW061][AW071]

FIG.25 REAR COMBINATION LAMP

(F7Z224H0) ﾘﾔｰｺﾝﾋﾞﾈｰｼｮﾝﾗﾝﾌﾟ

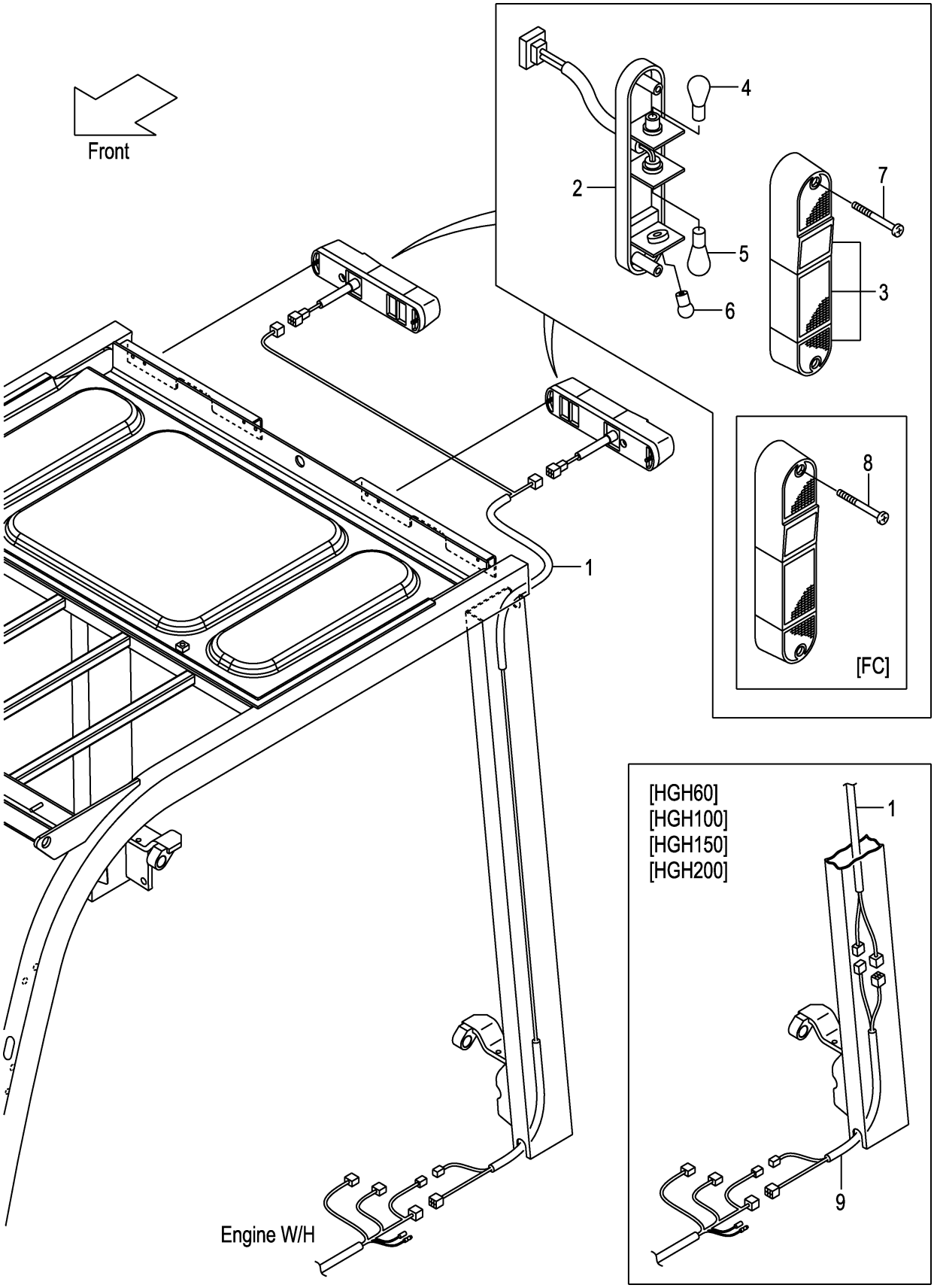

FIG.25

(F7Z224H0)

A:FD20C3Z FD20T3Z FD25C3Z FD25T3Z

Item No	Part No.	Mark	Description		Req'd	Remarks : Serial No.
1	22N52-42251		WIRE-HARNESS,R-COMBNATION	ﾜｲﾔﾊｰﾈｽ	1	
A1	209K2-42002		LAMP-ASSY,REAR-COMBNATION	ﾘﾔｰｺﾝﾋﾞﾈｰｼｮﾝﾗﾝﾌﾟｱｯｾﾝ	2	INC.2-7
2	NO PART NO.	#	BODY	ﾎﾞﾃﾞｨ	2	
3	209K2-42021		LENS,PLASTIC	ﾚﾝｽﾞ	2	
4	210F2-42021		BULB,12V/23,8W	ﾊﾞﾙﾌﾞ	2	
5	209K2-42041		BULB,12V/27W	ﾊﾞﾙﾌﾞ	2	
6	210F2-42031		BULB,12V/10W	ﾊﾞﾙﾌﾞ	2	
7	01030-05055		SCREW	ｽｸﾘｭ	4	(WITHOUT FC)
8	514A3-72091		BOLT,PAN-HEAD	ﾎﾞﾙﾄ	4	[FC]
9	52N55-02451		WIRE-HARNESS,JOINT	ﾜｲﾔﾊｰﾈｽ	1	[HGH060][HGH100][HGH150] [HGH200]

FIG.26 REAR COMBINATION LAMP [RRE][SCB001][SCBCR]

(F7Z224J0) ﾘﾔｰｺﾝﾋﾞﾈｰｼｮﾝﾗﾝﾌﾟ

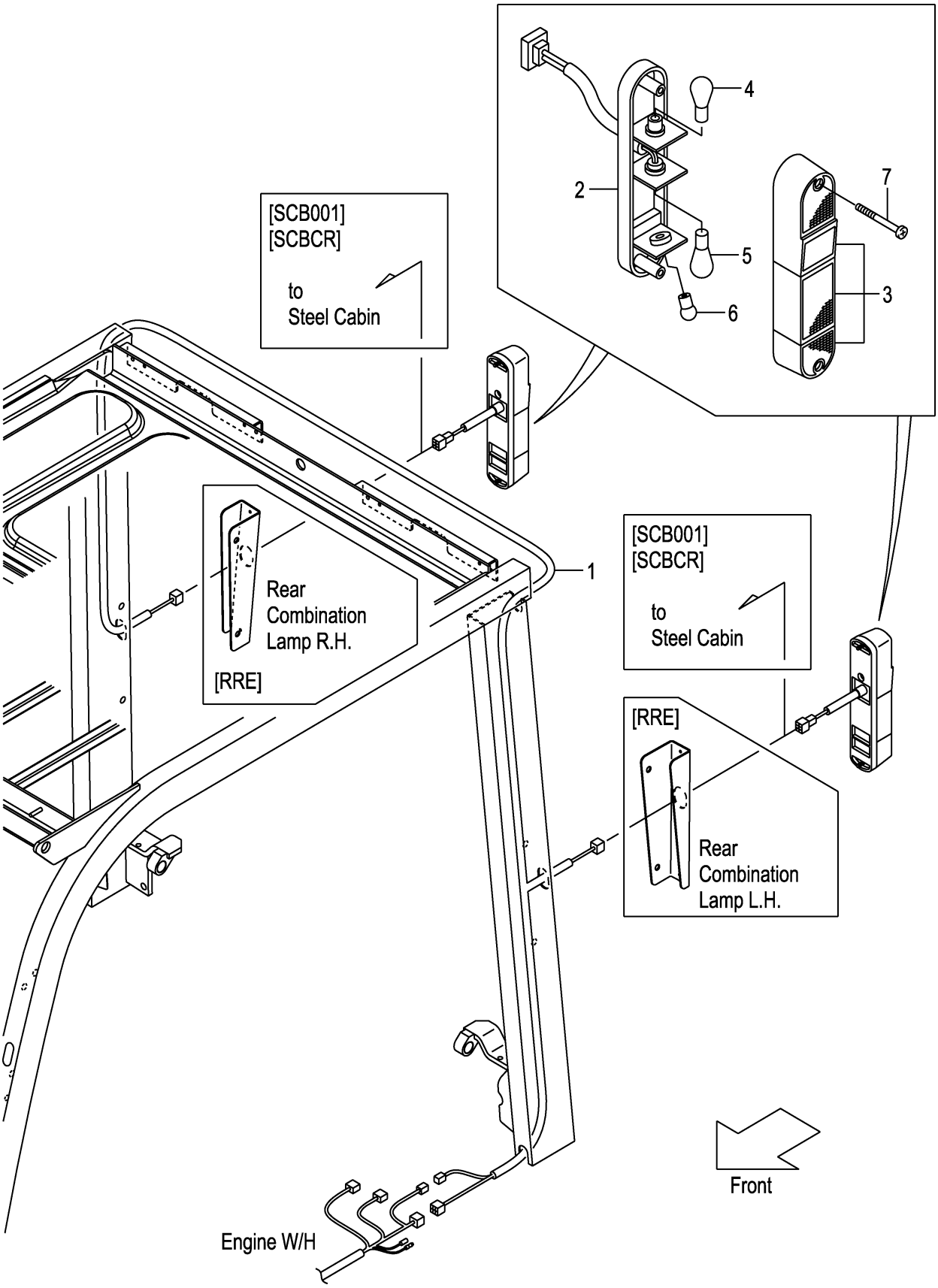

FIG.26

(F7Z224J0)

A:FD20C3Z FD20T3Z FD25C3Z FD25T3Z

Item No	Part No.	Mark	Description	Req'd	Remarks : Serial No.
1	52N59-92201		WIRE-HARNESS,R-COMBNATION ﾜｲﾔﾊｰﾈｽ	1	[RRE]
-	52N59-92201		WIRE-HARNESS,R-COMBNATION ﾜｲﾔﾊｰﾈｽ	1	[SCB001][SCBCR]
A1	209K2-42002		LAMP-ASSY,REAR-COMBNATION ﾘﾔｰｺﾝﾋﾞﾈｰｼｮﾝﾗﾝﾌﾟｱｯｾﾝ	2	[RRE][SCB001][SCBCR] INC.2-7
2	NO PART NO.	#	BODY ﾎﾞﾃﾞｨ	2	[RRE][SCB001][SCBCR]
3	209K2-42021		LENS,PLASTIC ﾚﾝｽﾞ	2	[RRE][SCB001][SCBCR]
4	210F2-42021		BULB,12V/23,8W ﾊﾞﾙﾌﾞ	2	[RRE][SCB001][SCBCR]
5	209K2-42041		BULB,12V/27W ﾊﾞﾙﾌﾞ	2	[RRE][SCB001][SCBCR]
6	210F2-42031		BULB,12V/10W ﾊﾞﾙﾌﾞ	2	[RRE][SCB001][SCBCR]
7	01030-05055		SCREW ｽｸﾘｭ	4	[RRE][SCB001][SCBCR]

FIG.27 LICENSE LAMP [RRE]

(F7Z224K0) ﾗｲｾﾝｽﾗﾝﾌﾟ

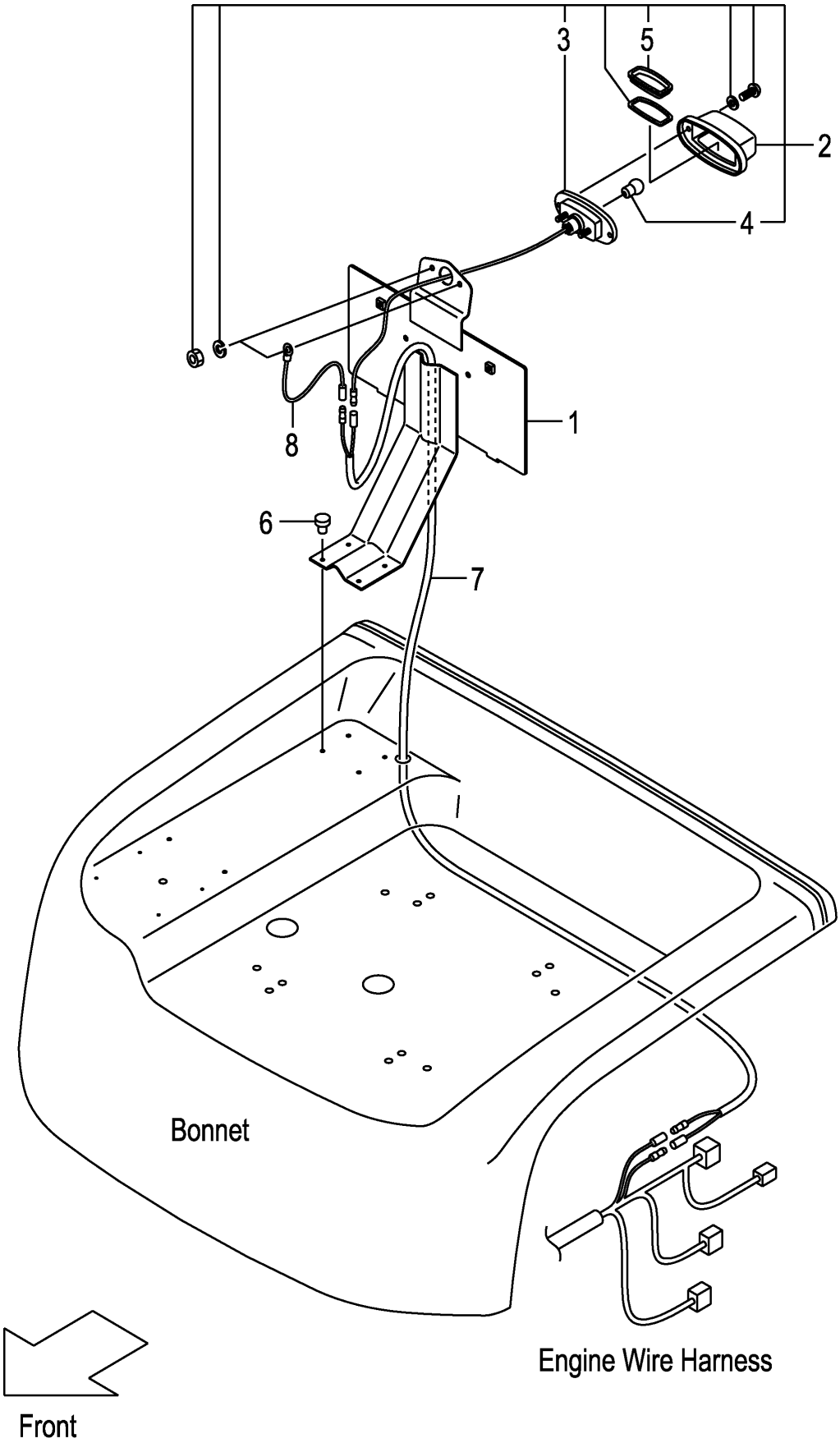

FIG.27

(F7Z224K0)

A:FD20C3Z FD20T3Z FD25C3Z FD25T3Z

Item No	Part No.	Mark	Description		Req'd	Remarks : Serial No.
1	52N59-92101		BRACKET,NUMBER-PLATE	ﾌﾞﾗｹｯﾄ	1	[RRE]
2	22132-40202		LAMP,LICENSE	ﾗﾝﾌﾟ	1	[RRE] INC.3-5
3	NO PART NO.	#	BODY	ﾎﾞﾃﾞｨ	1	[RRE]
4	22132-40041		BULB,12V/10W	ﾊﾞﾙﾌﾞ	1	[RRE]
5	22192-42411		LENS,PLASTIC	ﾚﾝｽﾞ	1	[RRE]
6	22256-42001		RIVET	ﾘﾍﾞｯﾄ	4	[RRE]
7	558A9-92001		WIRE-HARNESS,LICENSE	ﾜｲﾔﾊｰﾈｽ	1	[RRE]
8	222A2-42511		WIRE,LEAD	ﾜｲﾔ	1	[RRE]

FIG.28 LICENSE LAMP [SCB001/RRE][SCBCR/RRE]

(F7Z224L0) ﾗｲｾﾝｽﾗﾝﾌﾟ

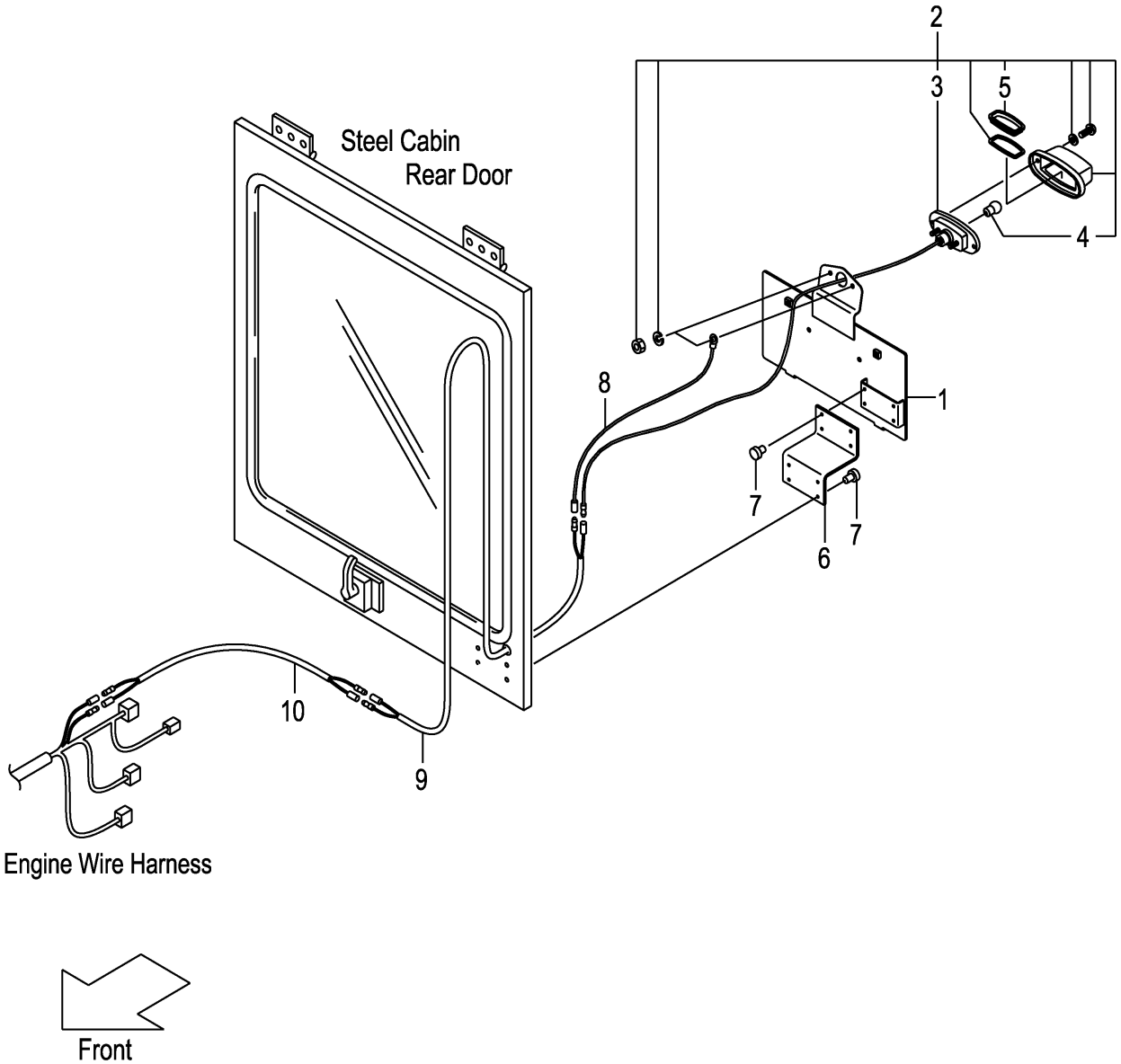

FIG.28

(F7Z224L0)

A:FD20C3Z FD20T3Z FD25C3Z FD25T3Z

Item No	Part No.	Mark	Description		Req'd	Remarks : Serial No.
1	531A0-52521		BRACKET,NUMBER-PLATE	ﾌﾞﾗｹｯﾄ	1	[SCB001/RRE][SCBCR/RRE]
2	22132-40202		LAMP,LICENSE	ﾗﾝﾌﾟ	1	[SCB001/RRE][SCBCR/RRE]
						INC.3-5
3	NO PART NO.	#	BODY	ﾎﾞﾃﾞｨ	1	[SCB001/RRE][SCBCR/RRE]
4	22132-40041		BULB,12V/10W	ﾊﾞﾙﾌﾞ	1	[SCB001/RRE][SCBCR/RRE]
5	22192-42411		LENS,PLASTIC	ﾚﾝｽﾞ	1	[SCB001/RRE][SCBCR/RRE]
6	539A5-32361		BRACKET	ﾌﾞﾗｹｯﾄ	1	[SCB001/RRE][SCBCR/RRE]
7	22256-42001		RIVET	ﾘﾍﾞｯﾄ	8	[SCB001/RRE][SCBCR/RRE]
8	222A2-42511		WIRE,LEAD	ﾜｲﾔ	1	[SCB001/RRE][SCBCR/RRE]
9	534A9-92131		WIRE-HARNESS,LICENSE	ﾜｲﾔﾊｰﾈｽ	1	[SCB001/RRE][SCBCR/RRE]
10	558A9-92001		WIRE-HARNESS,LICENSE	ﾜｲﾔﾊｰﾈｽ	1	[SCB001/RRE][SCBCR/RRE]

FIG.29 LICENSE LAMP [LP]

(F7Z224N0) ﾗｲｾﾝｽﾗﾝﾌﾟ

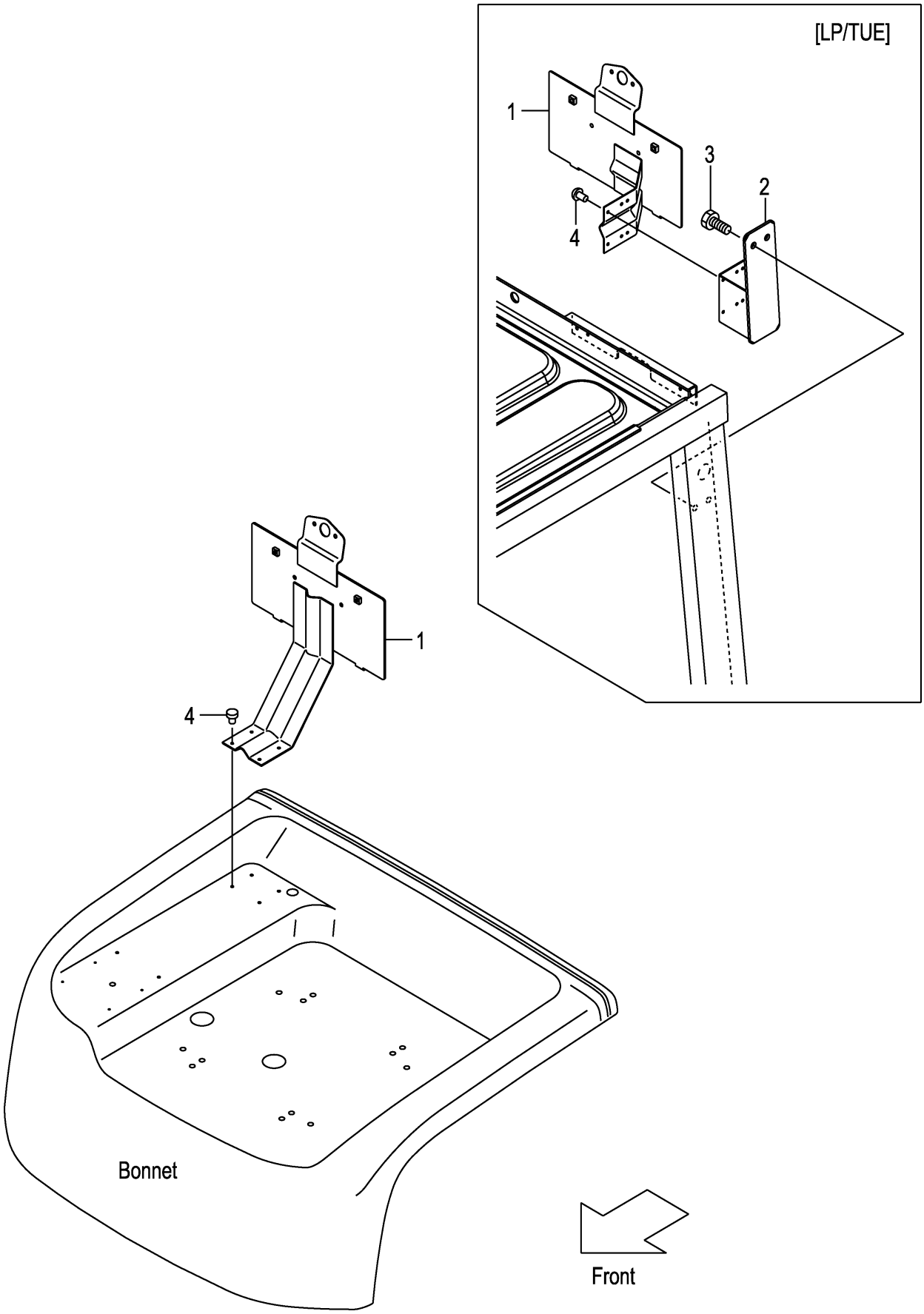

FIG.29

(F7Z224N0)

A:FD20C3Z FD20T3Z FD25C3Z FD25T3Z

Item No	Part No.	Mark	Description	Req'd	Remarks : Serial No.
1	52N59-92101		BRACKET,NUMBER-PLATE ﾌﾞﾗｹｯﾄ	1	[LP]
-	509P9-90101		BRACKET,NUMBER-PLATE ﾌﾞﾗｹｯﾄ	1	[LP/TUE]
2	52N59-92501		BRACKET,LP ﾌﾞﾗｹｯﾄ	1	[LP/TUE]
3	01185-08016		BOLT ﾎﾞﾙﾄ	2	[LP/TUE]
4	22256-42001		RIVET ﾘﾍﾞｯﾄ	4	[LP]

FIG.30 REAR WORKING LIGHT [RWLR]

(F7Z224P0) ﾘﾔｰﾜｰｷﾝｸﾞﾗｲﾄ

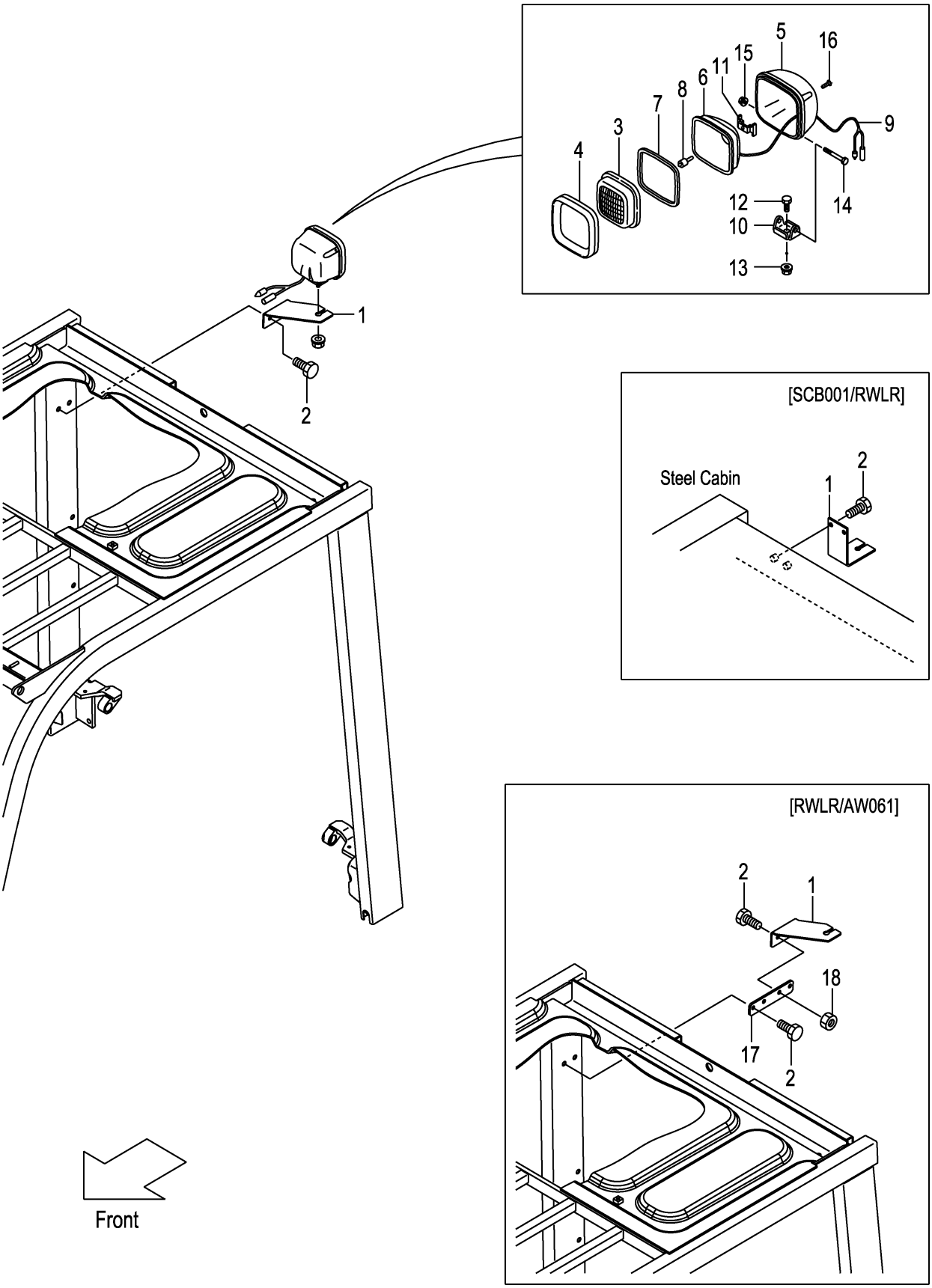

A:FD20C3Z FD20T3Z FD25C3Z FD25T3Z

Item No	Part No.	Mark	Description		Req'd	Remarks : Serial No.
1	52N51-42161		BRACKET,RWL,RH	ﾌﾞﾗｹｯﾄ	1	[RWLR]
-	530C1-42001		BRACKET,RWL	ﾌﾞﾗｹｯﾄ	1	[SCB001/RWLR]
2	01185-08016		BOLT	ﾎﾞﾙﾄ	2	[RWLR]
-	01185-08016		BOLT	ﾎﾞﾙﾄ	4	[RWLR/AW061]
-	01185-08020		BOLT	ﾎﾞﾙﾄ	2	[SCB001/RWLR]
A1	216G2-40602		LAMP-ASSY,HEAD	ﾍｯﾄﾞﾗﾝﾌﾟｱｯｾﾝ	1	[RWLR] INC.3-16
3	216G2-43502		LENS	ﾚﾝｽﾞ	1	[RWLR]
4	216G2-43631		RIM	ﾘﾑ	1	[RWLR]
5	NO PART NO.	#	HOUSING	ﾊｳｼﾞﾝｸﾞ	1	[RWLR]
6	NO PART NO.	#	REFLECTOR	ﾘﾌﾚｸﾀ	1	[RWLR]
7	216G2-43531		GASKET	ｶﾞｽｹｯﾄ	1	[RWLR]
8	216G2-43542		BULB,12V/55W	ﾊﾞﾙﾌﾞ	1	[RWLR]
9	216G2-43551		WIRE,LEAD	ﾜｲﾔ	1	[RWLR]
10	216G2-43562		BRACKET	ﾌﾞﾗｹｯﾄ	1	[RWLR]
11	216G2-43571		SPRING	ｽﾌﾟﾘﾝｸﾞ	1	[RWLR]
12	216G2-43582		BOLT	ﾎﾞﾙﾄ	1	[RWLR]
13	216G2-43592		NUT	ﾅｯﾄ	1	[RWLR]
14	216G2-43602		BOLT	ﾎﾞﾙﾄ	1	[RWLR]
15	216G2-43611		NUT	ﾅｯﾄ	1	[RWLR]
16	216G2-43622		SCREW	ｽｸﾘｭ	4	[RWLR]
17	52N51-42301		PLATE	ﾌﾟﾚｰﾄ	1	[RWLR/AW061]
18	01400-00008		NUT	ﾅｯﾄ	2	[RWLR/AW061]

FIG.31 REAR WORKING LIGHT [RWLL]

(F7Z224Q0) ﾘﾔｰﾜｰｷﾝｸﾞﾗｲﾄ

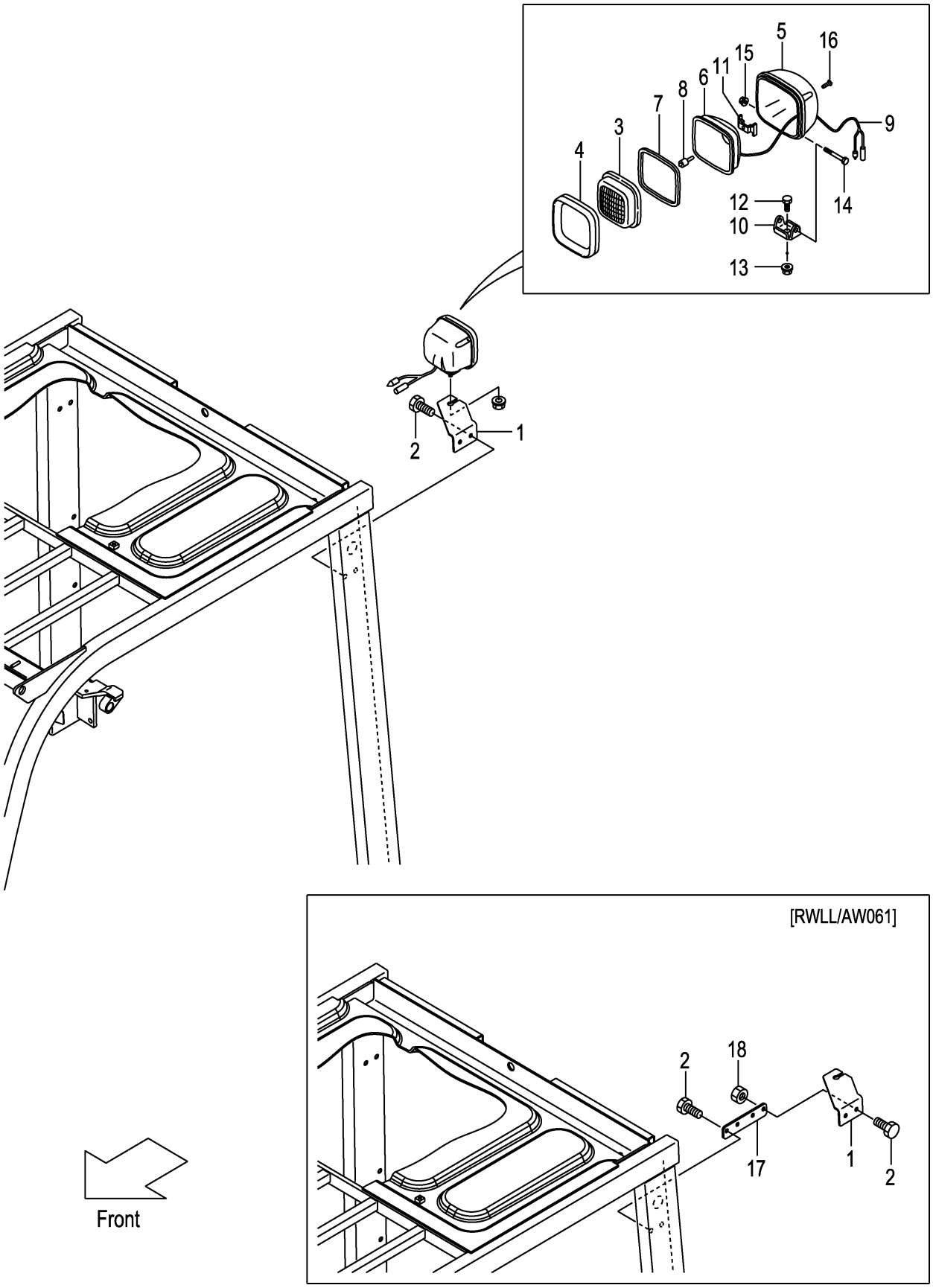

FIG.31

(F7Z224Q0)

A:FD20C3Z FD20T3Z FD25C3Z FD25T3Z

Item No	Part No.	Mark	Description		Req'd	Remarks : Serial No.
1	52N51-42151		BRACKET,RWL,LH	ﾌﾞﾗｹｯﾄ	1	[RWLL]
2	01185-08016		BOLT	ﾎﾞﾙﾄ	2	[RWLL]
-	01185-08016		BOLT	ﾎﾞﾙﾄ	4	[RWLL/AW061]
A1	216G2-40602		LAMP-ASSY,HEAD	ﾍｯﾄﾞﾗﾝﾌﾟｱｯｾﾝ	1	[RWLL] INC.3-16
3	216G2-43502		LENS	ﾚﾝｽﾞ	1	[RWLL]
4	216G2-43631		RIM	ﾘﾑ	1	[RWLL]
5	NO PART NO.	#	HOUSING	ﾊｳｼﾞﾝｸﾞ	1	[RWLL]
6	NO PART NO.	#	REFLECTOR	ﾘﾌﾚｸﾀ	1	[RWLL]
7	216G2-43531		GASKET	ｶﾞｽｹｯﾄ	1	[RWLL]
8	216G2-43542		BULB,12V/55W	ﾊﾞﾙﾌﾞ	1	[RWLL]
9	216G2-43551		WIRE,LEAD	ﾜｲﾔ	1	[RWLL]
10	216G2-43562		BRACKET	ﾌﾞﾗｹｯﾄ	1	[RWLL]
11	216G2-43571		SPRING	ｽﾌﾟﾘﾝｸﾞ	1	[RWLL]
12	216G2-43582		BOLT	ﾎﾞﾙﾄ	1	[RWLL]
13	216G2-43592		NUT	ﾅｯﾄ	1	[RWLL]
14	216G2-43602		BOLT	ﾎﾞﾙﾄ	1	[RWLL]
15	216G2-43611		NUT	ﾅｯﾄ	1	[RWLL]
16	216G2-43622		SCREW	ｽｸﾘｭ	4	[RWLL]
17	52N51-42301		PLATE	ﾌﾟﾚｰﾄ	1	[RWLL/AW061]
18	01400-00008		NUT	ﾅｯﾄ	2	[RWLL/AW061]

FIG.32 REAR WORKING LIGHT [RWL2]

(F7Z224R0) ﾘﾔｰﾜｰｷﾝｸﾞﾗｲﾄ

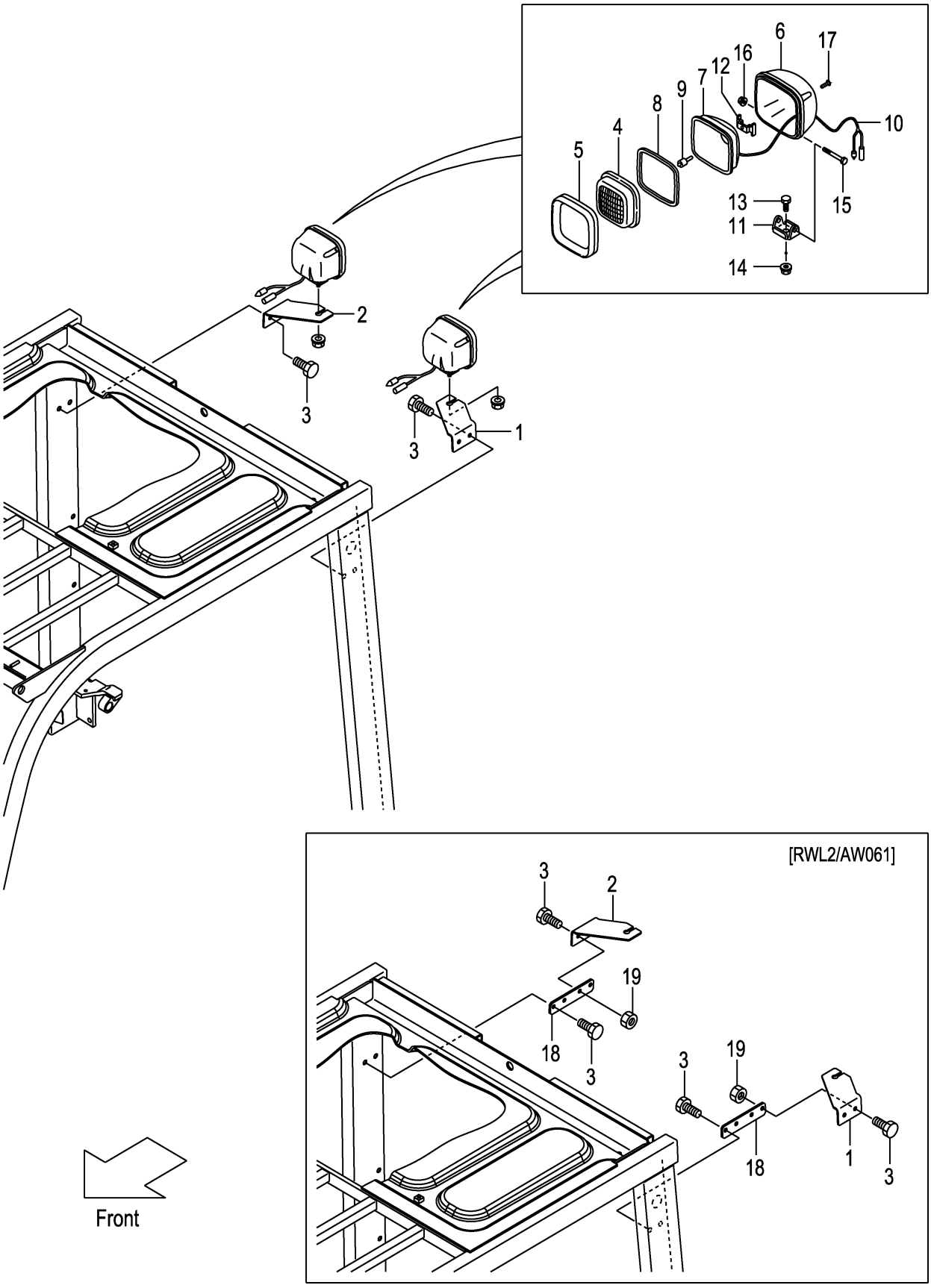

A:FD20C3Z FD20T3Z FD25C3Z FD25T3Z

Item No	Part No.	Mark	Description		Req'd	Remarks : Serial No.
1	52N51-42151		BRACKET,RWL,LH	ﾌﾞﾗｹｯﾄ	1	[RWL2]
2	52N51-42161		BRACKET,RWL,RH	ﾌﾞﾗｹｯﾄ	1	[RWL2]
3	01185-08016		BOLT	ﾎﾞﾙﾄ	4	[RWL2]
-	01185-08016		BOLT	ﾎﾞﾙﾄ	8	[RWL2/AW061]
A1	216G2-40602		LAMP-ASSY,HEAD	ﾍｯﾄﾞﾗﾝﾌﾟｱｯｾﾝ	2	[RWL2] INC.4-17
4	216G2-43502		LENS	ﾚﾝｽﾞ	2	[RWL2]
5	216G2-43631		RIM	ﾘﾑ	2	[RWL2]
6	NO PART NO.	#	HOUSING	ﾊｳｼﾞﾝｸﾞ	2	[RWL2]
7	NO PART NO.	#	REFLECTOR	ﾘﾌﾚｸﾀ	2	[RWL2]
8	216G2-43531		GASKET	ｶﾞｽｹｯﾄ	2	[RWL2]
9	216G2-43542		BULB,12V/55W	ﾊﾞﾙﾌﾞ	2	[RWL2]
10	216G2-43551		WIRE,LEAD	ﾜｲﾔ	2	[RWL2]
11	216G2-43562		BRACKET	ﾌﾞﾗｹｯﾄ	2	[RWL2]
12	216G2-43571		SPRING	ｽﾌﾟﾘﾝｸﾞ	2	[RWL2]
13	216G2-43582		BOLT	ﾎﾞﾙﾄ	2	[RWL2]
14	216G2-43592		NUT	ﾅｯﾄ	2	[RWL2]
15	216G2-43602		BOLT	ﾎﾞﾙﾄ	2	[RWL2]
16	216G2-43611		NUT	ﾅｯﾄ	2	[RWL2]
17	216G2-43622		SCREW	ｽｸﾘｭ	8	[RWL2]
18	52N51-42301		PLATE	ﾌﾟﾚｰﾄ	2	[RWL2/AW061]
19	01400-00008		NUT	ﾅｯﾄ	4	[RWL2/AW061]

FIG.33 REAR WORKING LIGHT [RWL/FE][RWL/TUE]

(F7Z224S0) エレクトリックパーツ

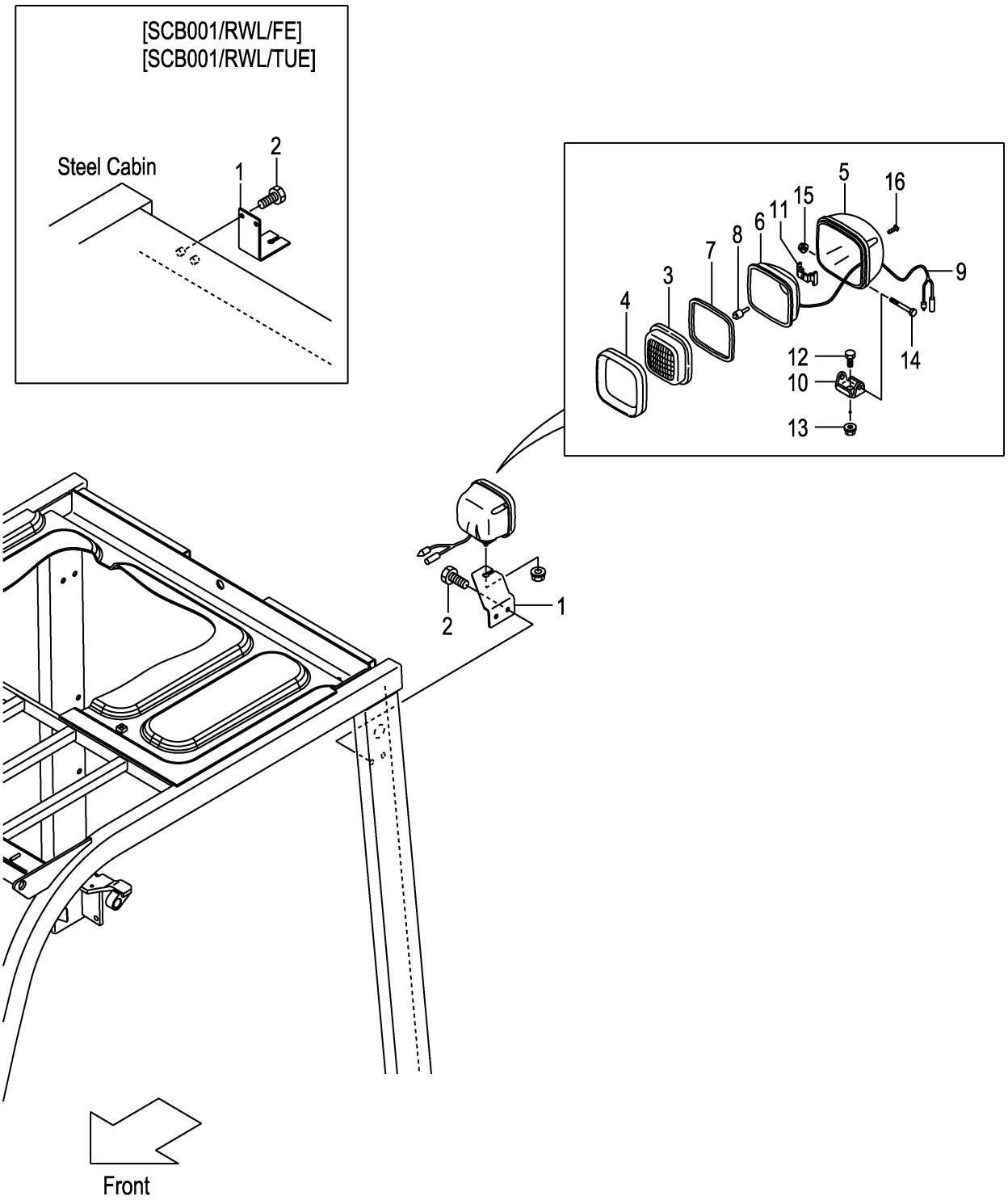

FIG.33

(F7Z224S0)

A:FD20C3Z FD20T3Z FD25C3Z FD25T3Z:119-

Item No	Part No.	Mark	Description		Req'd	Remarks : Serial No.
1	52N51-42151		BRACKET,RWL,LH	ﾌﾞﾗｹｯﾄ	1	[RWL/FE][RWL/TUE]
-	530C1-42001		BRACKET,RWL	ﾌﾞﾗｹｯﾄ	1	[SCB001/RWL/FE]
						[SCB001/RWL/TUE]
2	01185-08016		BOLT	ﾎﾞﾙﾄ	2	[RWL/FE][RWL/TUE]
-	01185-08020		BOLT	ﾎﾞﾙﾄ	2	[SCB001/RWL/FE]
						[SCB001/RWL/TUE]
A1	216G2-40602		LAMP-ASSY,HEAD	ﾍｯﾄﾞﾗﾝﾌﾟｱｯｾﾝ	1	[RWL/FE][RWL/TUE] INC.3-16
3	216G2-43502		LENS	ﾚﾝｽﾞ	1	[RWL/FE][RWL/TUE]
4	216G2-43631		RIM	ﾘﾑ	1	[RWL/FE][RWL/TUE]
5	NO PART NO.	#	HOUSING	ﾊｳｼﾞﾝｸﾞ	1	[RWL/FE][RWL/TUE]
6	NO PART NO.	#	REFLECTOR	ﾘﾌﾚｸﾀ	1	[RWL/FE][RWL/TUE]
7	216G2-43531		GASKET	ｶﾞｽｹｯﾄ	1	[RWL/FE][RWL/TUE]
8	216G2-43542		BULB,12V/55W	ﾊﾞﾙﾌﾞ	1	[RWL/FE][RWL/TUE]
9	216G2-43551		WIRE,LEAD	ﾜｲﾔ	1	[RWL/FE][RWL/TUE]
10	216G2-43562		BRACKET	ﾌﾞﾗｹｯﾄ	1	[RWL/FE][RWL/TUE]
11	216G2-43571		SPRING	ｽﾌﾟﾘﾝｸﾞ	1	[RWL/FE][RWL/TUE]
12	216G2-43582		BOLT	ﾎﾞﾙﾄ	1	[RWL/FE][RWL/TUE]
13	216G2-43592		NUT	ﾅｯﾄ	1	[RWL/FE][RWL/TUE]
14	216G2-43602		BOLT	ﾎﾞﾙﾄ	1	[RWL/FE][RWL/TUE]
15	216G2-43611		NUT	ﾅｯﾄ	1	[RWL/FE][RWL/TUE]
16	216G2-43622		SCREW	ｽｸﾘｭ	4	[RWL/FE][RWL/TUE]

FIG.34 REAR WORKING LIGHT WIRE HARNESS [RWL]

(F7Z224T0) ﾘﾔｰﾜｰｷﾝｸﾞﾗｲﾄﾜｲﾔﾊｰﾈｽ

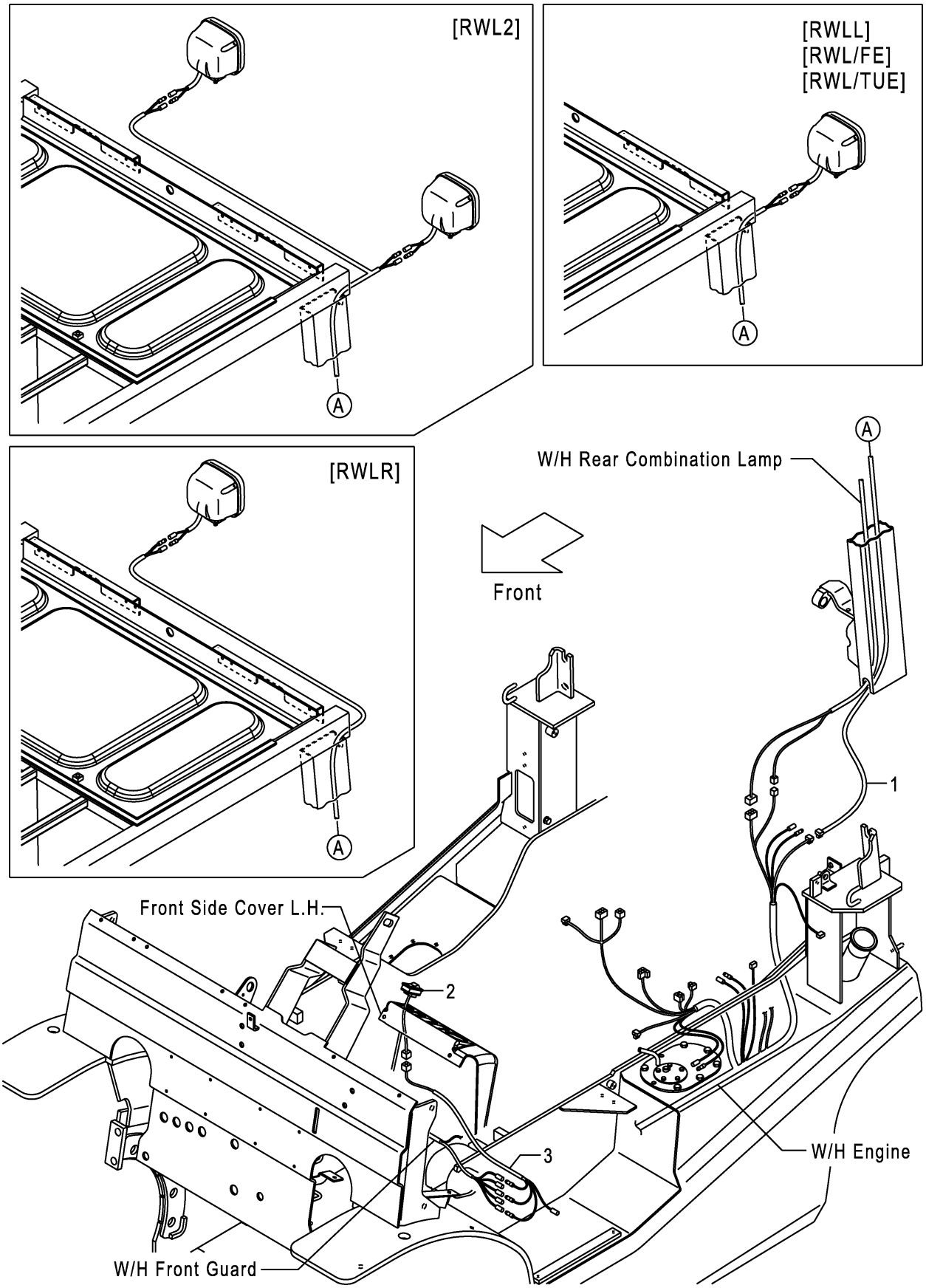

FIG.34
(F7Z224T0)

A:FD20C3Z FD20T3Z FD25C3Z FD25T3Z

Item No	Part No.	Mark	Description		Req'd	Remarks : Serial No.
1	52N51-42101		WIRE,LEAD,RWL	ﾜｲﾔ	1	[RWLR]
-	52N51-42111		WIRE,LEAD,RWL	ﾜｲﾔ	1	[RWLL]
-	52N51-42121		WIRE,LEAD,RWL	ﾜｲﾔ	1	[RWL2]
-	52N51-42111		WIRE,LEAD,RWL	ﾜｲﾔ	1	[RWL/FE][RWL/TUE]
2	52N51-42401		SWITCH,RWL	ｽｲｯﾁ	1	[RWLR][RWLL][RWL2]
-	52N51-42401		SWITCH,RWL	ｽｲｯﾁ	1	[RWL/FE][RWL/TUE]
3	52N51-42411		WIRE-HARNESS,SWITCH	ﾜｲﾔﾊｰﾈｽ	1	[RWLR][RWLL][RWL2]
-	52N51-42411		WIRE-HARNESS,SWITCH	ﾜｲﾔﾊｰﾈｽ	1	[RWL/FE][RWL/TUE]
-	52N51-42511		WIRE-HARNESS,SWITCH	ﾜｲﾔﾊｰﾈｽ	1	[RWLR/PLR][RWLL/PLR] [RWL2/PLR]
-	52N51-42511		WIRE-HARNESS,SWITCH	ﾜｲﾔﾊｰﾈｽ	1	[RWL/PLR/FE][RWL/PLR/TUE]

FIG.35 REAR WORKING LIGHT WIRE HARNESS [RWL/BBR]

(F7Z224U0) リヤーワーキング゛ライトワイヤハーネス

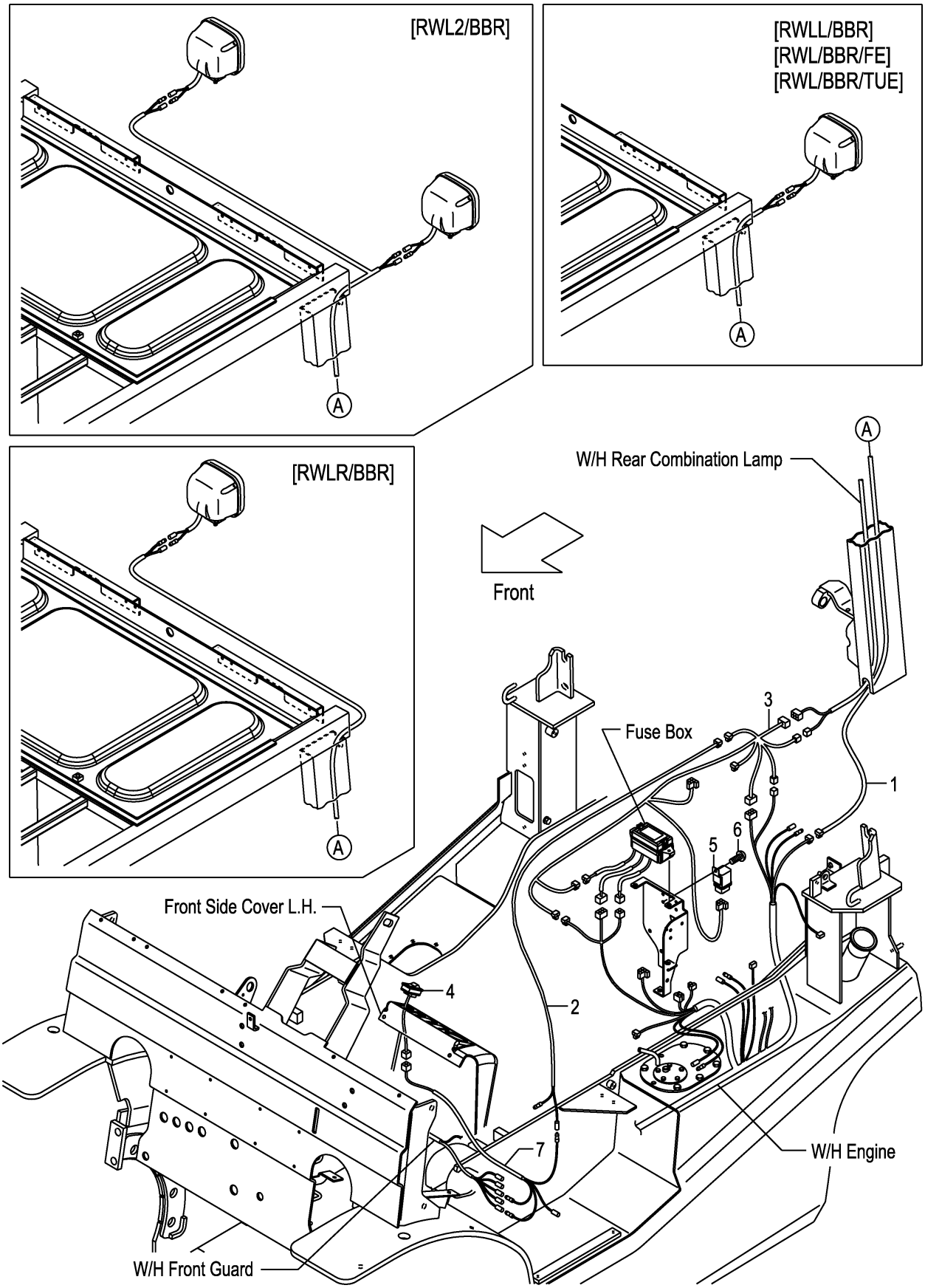

FIG.35
(F7Z224U0)

A:FD20C3Z FD20T3Z FD25C3Z FD25T3Z

Item No	Part No.	Mark	Description		Req'd	Remarks : Serial No.
1	52N51-42101		WIRE,LEAD,RWL	ﾜｲﾔ	1	[RWLR/BBR]
-	52N51-42111		WIRE,LEAD,RWL	ﾜｲﾔ	1	[RWLL/BBR]
-	52N51-42121		WIRE,LEAD,RWL	ﾜｲﾔ	1	[RWL2/BBR]
-	52N51-42111		WIRE,LEAD,RWL	ﾜｲﾔ	1	[RWL/BBR/FE][RWL/BBR/TUE]
2	516G1-42111		WIRE,LEAD,RWL	ﾜｲﾔ	1	[RWLR/BBR][RWLL/BBR]
						[RWL2/BBR]
-	516G1-42111		WIRE,LEAD,RWL	ﾜｲﾔ	1	[RWL/BBR/FE][RWL/BBR/TUE]
3	52N58-92111		WIRE-HARNESS,BBR	ﾜｲﾔﾊｰﾈｽ	1	[RWLR/BBR][RWLL/BBR]
						[RWL2/BBR]
-	52N58-92111		WIRE-HARNESS,BBR	ﾜｲﾔﾊｰﾈｽ	1	[RWL/BBR/FE][RWL/BBR/TUE]
4	52N51-42401		SWITCH,RWL	ｽｲｯﾁ	1	[RWLR/BBR][RWLL/BBR]
						[RWL2/BBR]
-	52N51-42401		SWITCH,RWL	ｽｲｯﾁ	1	[RWL/BBR/FE][RWL/BBR/TUE]
5	26062-42881		RELAY,12V	ﾘﾚｰ	1	[RWLR/BBR][RWLL/BBR]
						[RWL2/BBR]
-	26062-42881		RELAY,12V	ﾘﾚｰ	1	[RWL/BBR/FE][RWL/BBR/TUE]
6	214A2-42611		SCREW	ｽｸﾘｭ	1	[RWLR/BBR][RWLL/BBR]
						[RWL2/BBR]
-	214A2-42611		SCREW	ｽｸﾘｭ	1	[RWL/BBR/FE][RWL/BBR/TUE]
7	52N51-42411		WIRE-HARNESS,SWITCH	ﾜｲﾔﾊｰﾈｽ	1	[RWLR/BBR][RWLL/BBR]
						[RWL2/BBR]
-	52N51-42411		WIRE-HARNESS,SWITCH	ﾜｲﾔﾊｰﾈｽ	1	[RWL/BBR/FE][RWL/BBR/TUE]
-	52N51-42511		WIRE-HARNESS,SWITCH	ﾜｲﾔﾊｰﾈｽ	1	[RWLR/BBR/PLR][RWLL/BBR/PLR]
						[RWL2/BBR/PLR]

FIG.36 REVOLVING LIGHT [RLY][RLR]

(F7Z224V0) ﾘﾎﾞﾙﾋﾞﾝｸﾞﾗｲﾄ

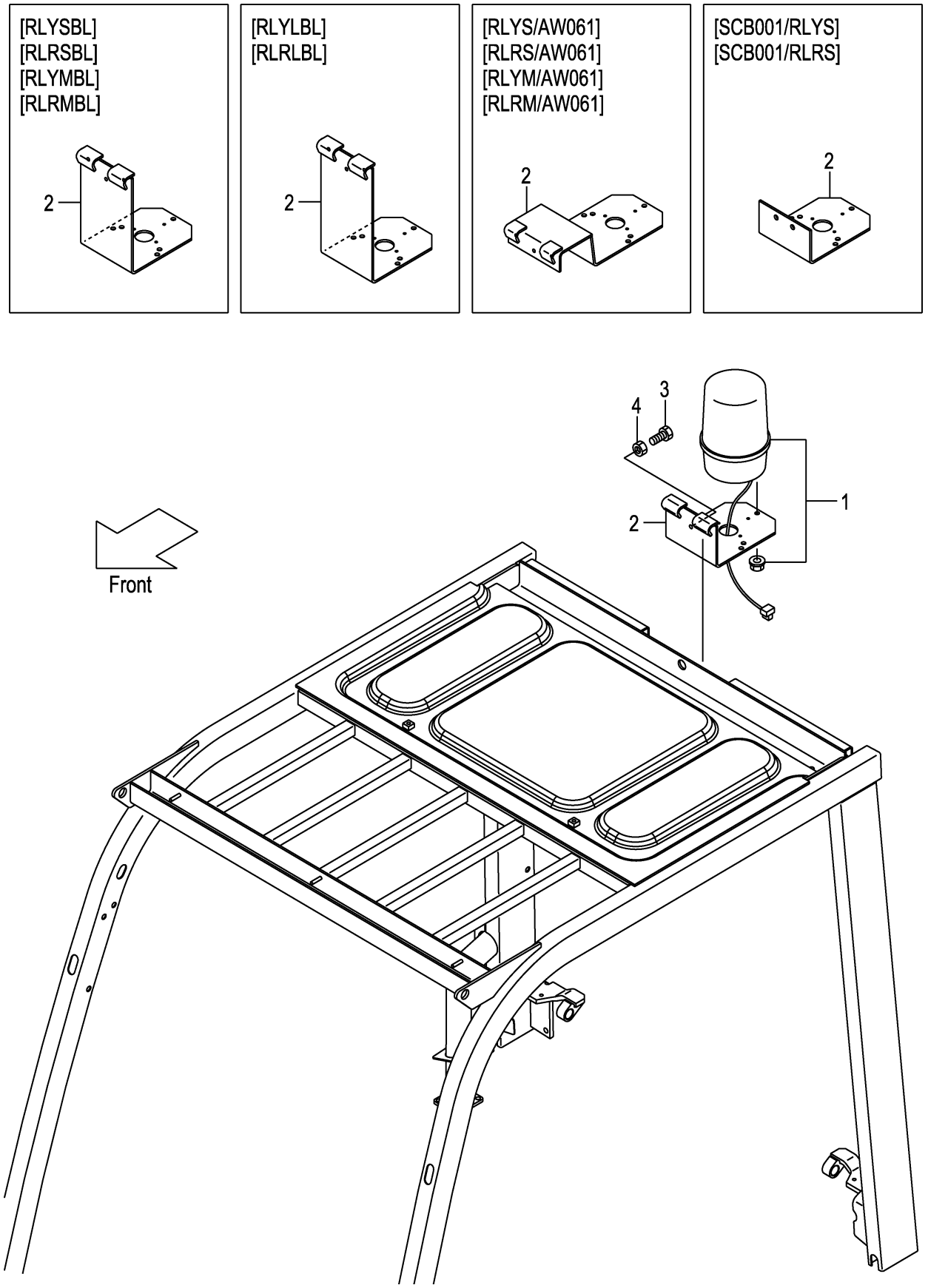

A:FD20C3Z FD20T3Z FD25C3Z FD25T3Z

Item No	Part No.	Mark	Description		Req'd	Remarks : Serial No.
1	514A1-41001		LIGHT,REVOLVING	ﾗｲﾄ	1	[RLYS][RLYSBL]
-	514A1-41011		LIGHT,REVOLVING	ﾗｲﾄ	1	[RLRS][RLRSBL]
-	514A1-41021		LIGHT,REVOLVING	ﾗｲﾄ	1	[RLYM][RLYMBL]
-	514A1-41031		LIGHT,REVOLVING	ﾗｲﾄ	1	[RLRM][RLRMBL]
-	52N58-92201		LIGHT,REVOLVING	ﾗｲﾄ	1	[RLYL][RLYLBL]
-	52N58-92211		LIGHT,REVOLVING	ﾗｲﾄ	1	[RLRL][RLRLBL]
2	529F1-42251		BRACKET,REVOLVING	ﾌﾞﾗｹｯﾄ	1	[RLYS][RLRS][RLYM][RLRM] [RLYL][RLRL]
-	529F1-42201		BRACKET,REVOLVING	ﾌﾞﾗｹｯﾄ	1	[RLYSBL][RLRSBL][RLYMBL] [RLRMBL]
-	52N58-92251		BRACKET,REVOLVING	ﾌﾞﾗｹｯﾄ	1	[RLYLBL][RLRLBL]
-	539A8-92251		BRACKET,REVOLVING	ﾌﾞﾗｹｯﾄ	1	[RLYS/AW061][RLRS/AW061] [RLYM/AW061][RLRM/AW061]
-	535C8-92051		BRACKET,REVOLVING	ﾌﾞﾗｹｯﾄ	1	[SCB001/RLYS][SCB001/RLRS]
3	01100-08020		BOLT	ﾎﾞﾙﾄ	3	[RLYS][RLYM][RLYL]
-	01100-08020		BOLT	ﾎﾞﾙﾄ	3	[RLRS][RLRM][RLRL]
-	01100-08020		BOLT	ﾎﾞﾙﾄ	3	[RLYSBL][RLRSBL][RLYMBL] [RLRMBL][RLYLBL][RLRLBL]
-	01185-08020		BOLT	ﾎﾞﾙﾄ	2	[SCB001/RLYS][SCB001/RLRS]
4	01400-00008		NUT	ﾅｯﾄ	3	[RLYS][RLYM][RLYL] (WITHOUT SCB001/RLYS)
-	01400-00008		NUT	ﾅｯﾄ	3	[RLRS][RLRM][RLRL] (WITHOUT SCB001/RLRS)
-	01400-00008		NUT	ﾅｯﾄ	3	[RLYSBL][RLRSBL][RLYMBL] [RLRMBL][RLYLBL][RLRLBL]

FIG.37 REVOLVING LIGHT WIRE HARNESS [RLY][RLR]

(F7Z224W0) ﾘﾎﾞﾙﾋﾞﾝｸﾞﾗｲﾄﾜｲﾔﾊｰﾈｽ

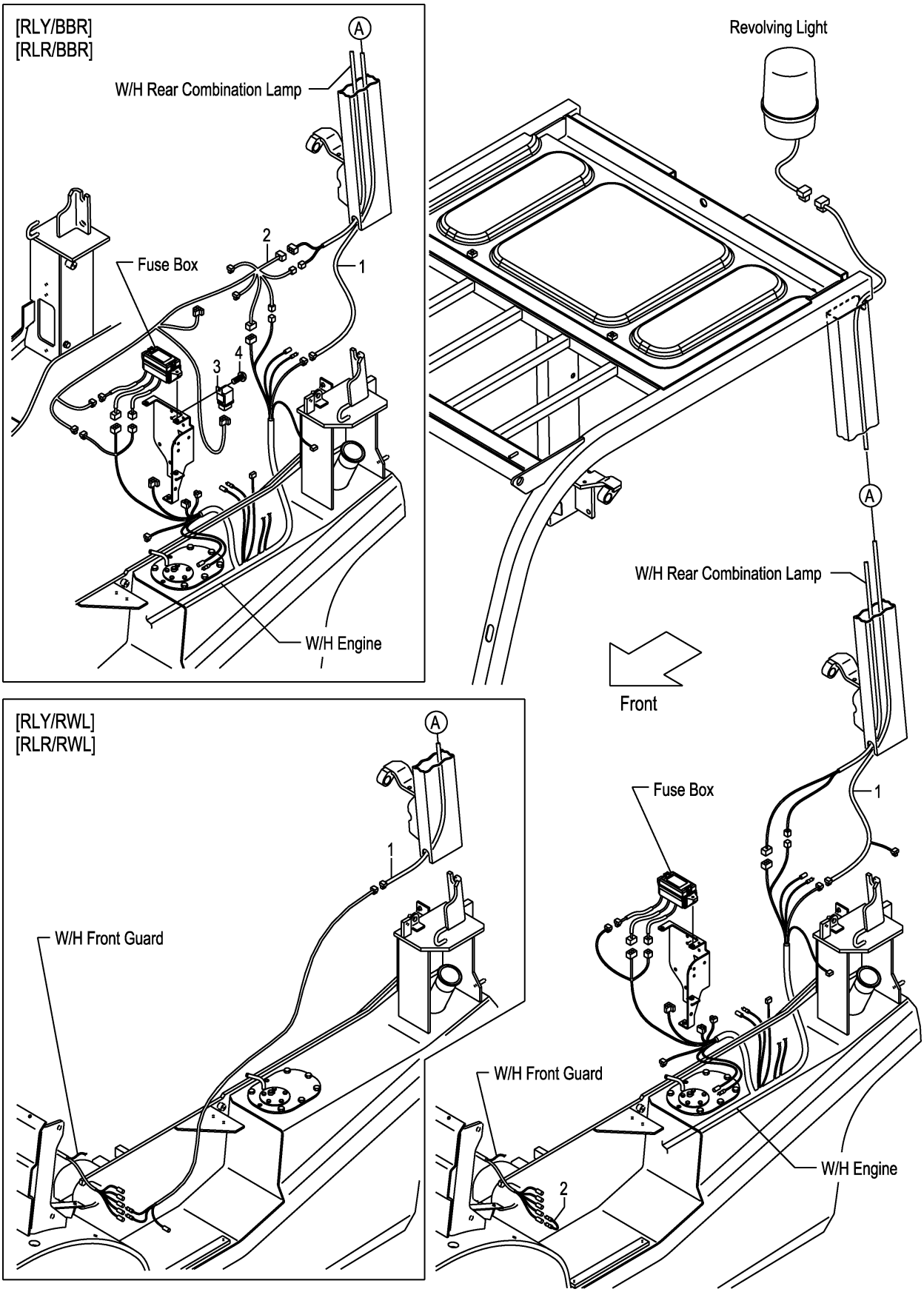

FIG.37

(F7Z224W0)

A:FD20C3Z FD20T3Z FD25C3Z FD25T3Z

Item No	Part No.	Mark	Description		Req'd	Remarks : Serial No.
1	52N58-92001		WIRE,LEAD	ﾜｲﾔ	1	[RLY][RLR]
-	52N58-92021		WIRE,LEAD	ﾜｲﾔ	1	[RLY/BBR][RLR/BBR][RLY/RWL] [RLR/RWL]
2	516G1-42211		WIRE,LEAD	ﾜｲﾔ	1	[RLY][RLR]
-	52N58-92111		WIRE-HARNESS,BBR	ﾜｲﾔﾊｰﾈｽ	1	[RLY/BBR][RLR/BBR]
-	52N58-92041		WIRE,LEAD	ﾜｲﾔ	1	[RLY/RWL][RLR/RWL]
3	26062-42881		RELAY,12V	ﾘﾚｰ	1	[RLY/BBR][RLR/BBR]
4	214A2-42611		SCREW	ｽｸﾘｭ	1	[RLY/BBR][RLR/BBR]

FIG.38 SPOT LIGHT [SPL]

(F7Z22640) スポットライト

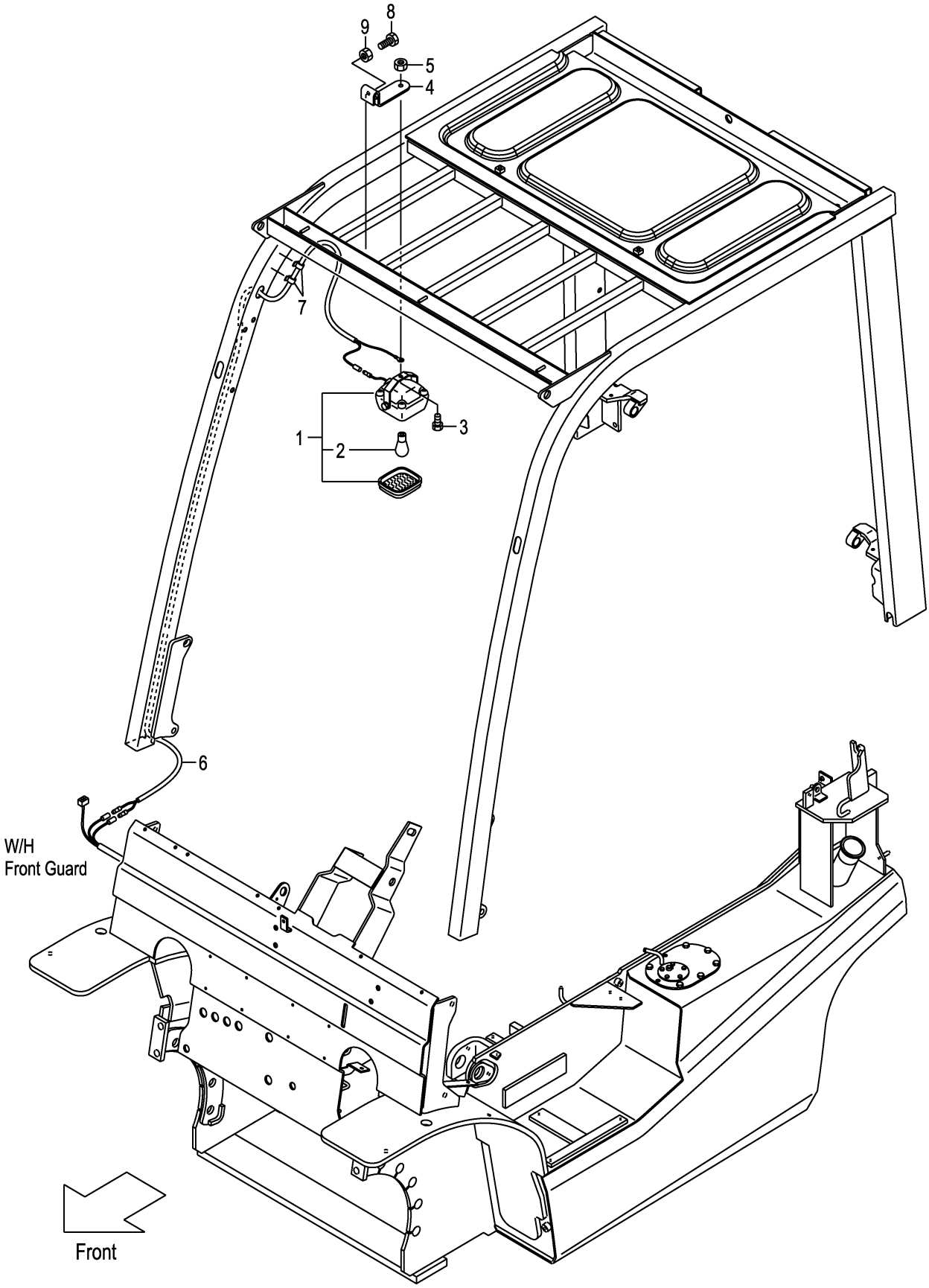

FIG.38

(F7Z22640)

A:FD20C3Z FD20T3Z FD25C3Z FD25T3Z

Item No	Part No.	Mark	Description		Req'd	Remarks : Serial No.
1	516G9-10101		LAMP	ﾗﾝﾌﾟ	1	[SPL] INC.2
2	516G9-12011		BULB,12V/18.2W	ﾊﾞﾙﾌﾞ	1	[SPL]
3	01185-08016		BOLT	ﾎﾞﾙﾄ	1	[SPL]
4	52N59-02001		BRACKET,SPOT-LAMP	ﾌﾞﾗｹｯﾄ	1	[SPL]
5	01400-00008		NUT	ﾅｯﾄ	1	[SPL]
6	539A9-02011		WIRE-HARNESS,SPOT-L.	ﾜｲﾔﾊｰﾈｽ	1	[SPL]
7	27732-42311		CLAMP,HARNESS	ｸﾗﾝﾌﾟ	2	[SPL]
8	01100-08025		BOLT	ﾎﾞﾙﾄ	2	[SPL]
9	01402-00008		NUT	ﾅｯﾄ	2	[SPL]

FIG.39 BACK BUZZER

(F7Z224X0) ﾊﾞｯｸﾌﾞｻﾞｰ

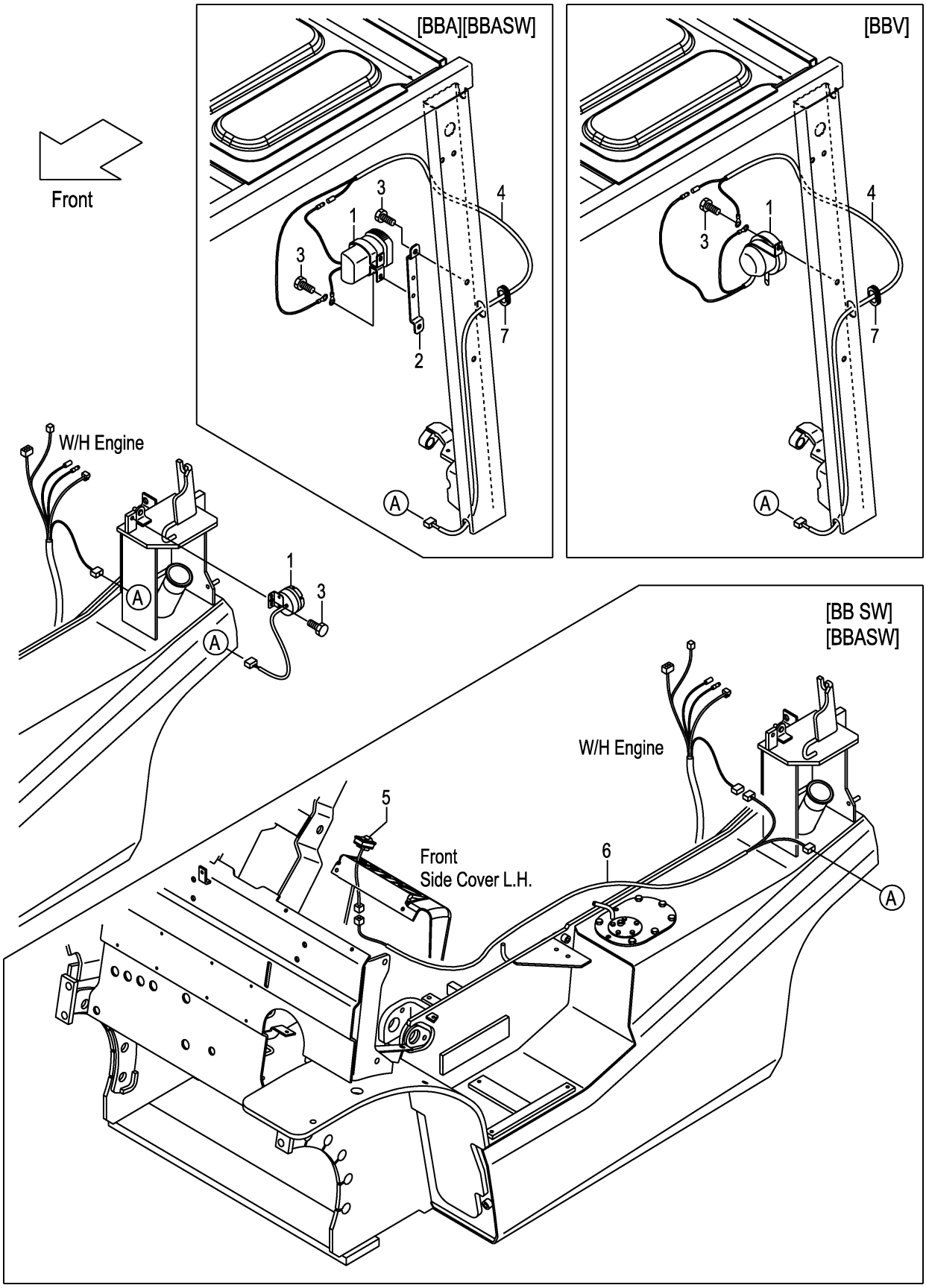

FIG.39

(F7Z224X0)

A:FD20C3Z FD20T3Z FD25C3Z FD25T3Z

Item No	Part No.	Mark	Description		Req'd	Remarks : Serial No.
1	234A2-42301		BUZZER,BACK,12V	ﾌﾞｻﾞｰ	1	
-	214A2-44001		BUZZER,BACK,12V	ﾌﾞｻﾞｰ	1	[BBA][BBASW]
-	52N51-30201		ALARM,VOICE	ｱﾗｰﾑ	1	[BBV]
2	52N51-31001		BRACKET,BBA	ﾌﾞﾗｹｯﾄ	1	[BBA][BBASW]
3	01185-08016		BOLT	ﾎﾞﾙﾄ	1	1-109
-	01183-08012		BOLT	ﾎﾞﾙﾄ	1	110-
-	01183-08016		BOLT	ﾎﾞﾙﾄ	4	[BBA][BBASW]
-	01183-08016		BOLT	ﾎﾞﾙﾄ	1	[BBV]
4	52N51-32011		WIRE,LEAD,BBA	ﾜｲﾔ	1	[BBA][BBASW][BBV]
5	52N51-32101		SWITCH,ON/OFF	ｽｲｯﾁ	1	[BB SW][BBASW]
6	52N51-32001		WIRE,LEAD,BBSW	ﾜｲﾔ	1	[BB SW][BBASW]
7	54315-32561		GROMMET	ｸﾞﾛﾒｯﾄ	1	110-
						[BBA][BBASW][BBV]

FIG.40 FAN [FAN]

(F7Z22650) ファン

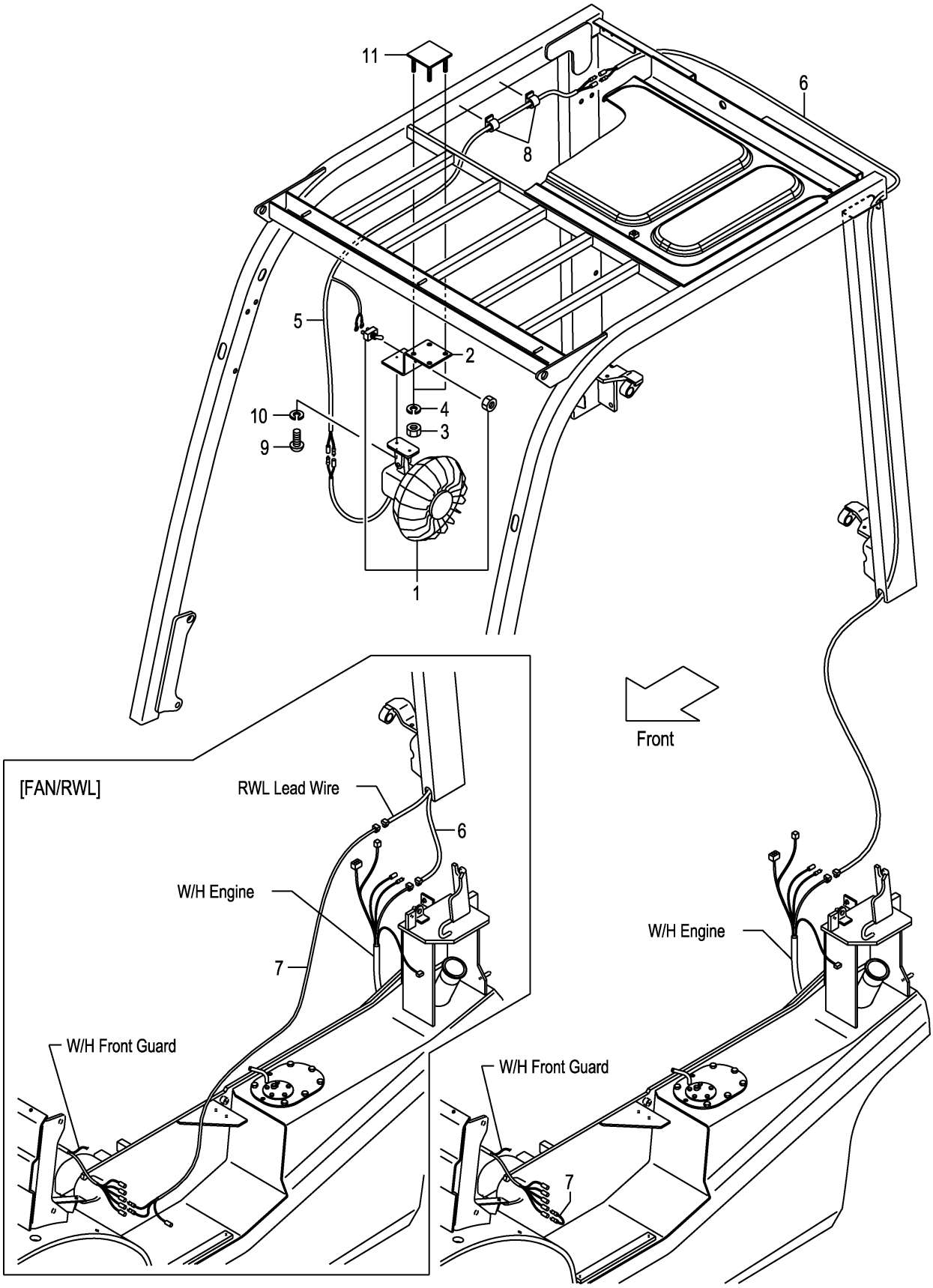

FIG.40

(F7Z22650)

A:FD20C3Z FD20T3Z FD25C3Z FD25T3Z

Item No	Part No.	Mark	Description		Req'd	Remarks : Serial No.
1	514A5-32341		FAN,CAR	ﾌｧﾝ	1	[FAN]
2	52N58-22001		BRACKET,FAN	ﾌﾞﾗｹｯﾄ	1	[FAN](WITHOUT FAN/SCB001)
3	01400-00008		NUT	ﾅｯﾄ	4	[FAN](WITHOUT FAN/SCB001)
4	02010-00008		WASHER	ﾜｯｼｬ	4	[FAN](WITHOUT FAN/SCB001)
5	539A8-22151		WIRE-HARNESS,FAN	ﾜｲﾔﾊｰﾈｽ	1	[FAN](WITHOUT FAN/SCB001)
6	516G1-42111		WIRE,LEAD	ﾜｲﾔ	1	[FAN](WITHOUT FAN/SCB001)
7	516G1-42211		WIRE,LEAD	ﾜｲﾔ	1	[FAN](WITHOUT FAN/SCB001)
-	514A1-42041		WIRE,LEAD	ﾜｲﾔ	1	[FAN/RWL]
8	27732-42311		CLAMP,HARNESS	ｸﾗﾝﾌﾟ	4	[FAN](WITHOUT FAN/SCB001)
9	01030-04014		SCREW	ｽｸﾘｭ	2	[FAN]
-	01044-04014		SCREW	ｽｸﾘｭ	2	[FAN/SCB001]
10	02010-00004		WASHER	ﾜｯｼｬ	2	[FAN](WITHOUT FAN/SCB001)
11	52N58-22101		BRACKET,FAN	ﾌﾞﾗｹｯﾄ	1	[FAN](WITHOUT FAN/SCB001)
12	209K2-42351	+	RELAY,1A	ﾘﾚｰ	1	[FAN/SCB001]

FIG.41 LIFT LOCK VALVE WIRE HARNESS [VLL]

(F7Z22660) ﾘﾌﾄﾛｯｸﾊﾞﾙﾌﾞﾜｲﾔﾊｰﾈｽ

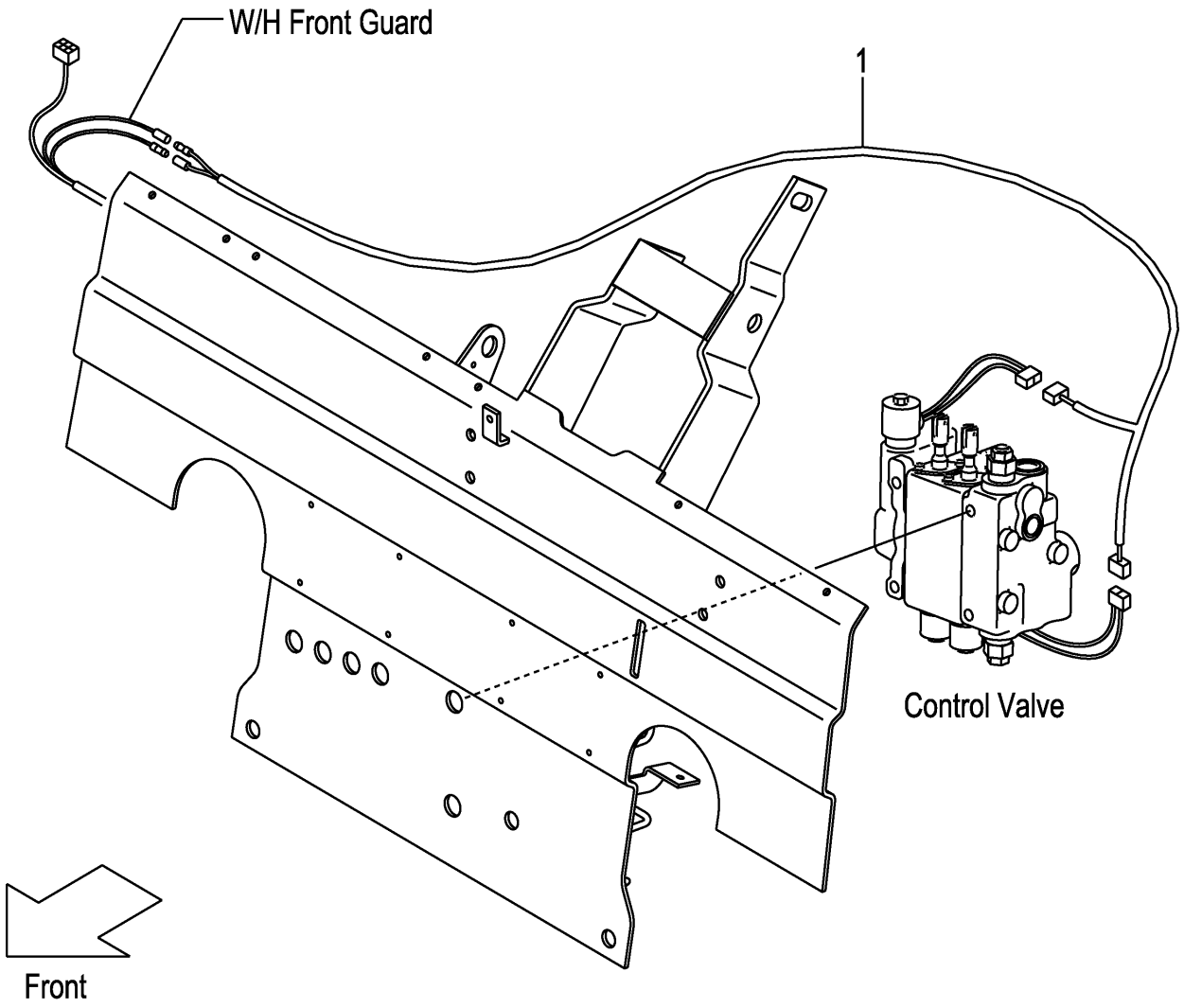

FIG.41

(F7Z22660)

A:FD20C3Z FD20T3Z FD25C3Z FD25T3Z

Item No	Part No.	Mark	Description	Req'd	Remarks : Serial No.
1	52N56-72001		WIRE-HARNESS,VLL ﾜｲﾔﾊｰﾈｽ	1	[VLL](WITHOUT VLL/SIL)

FIG.42 AMMETER [AM]

(F7Z226A0) アンメータ

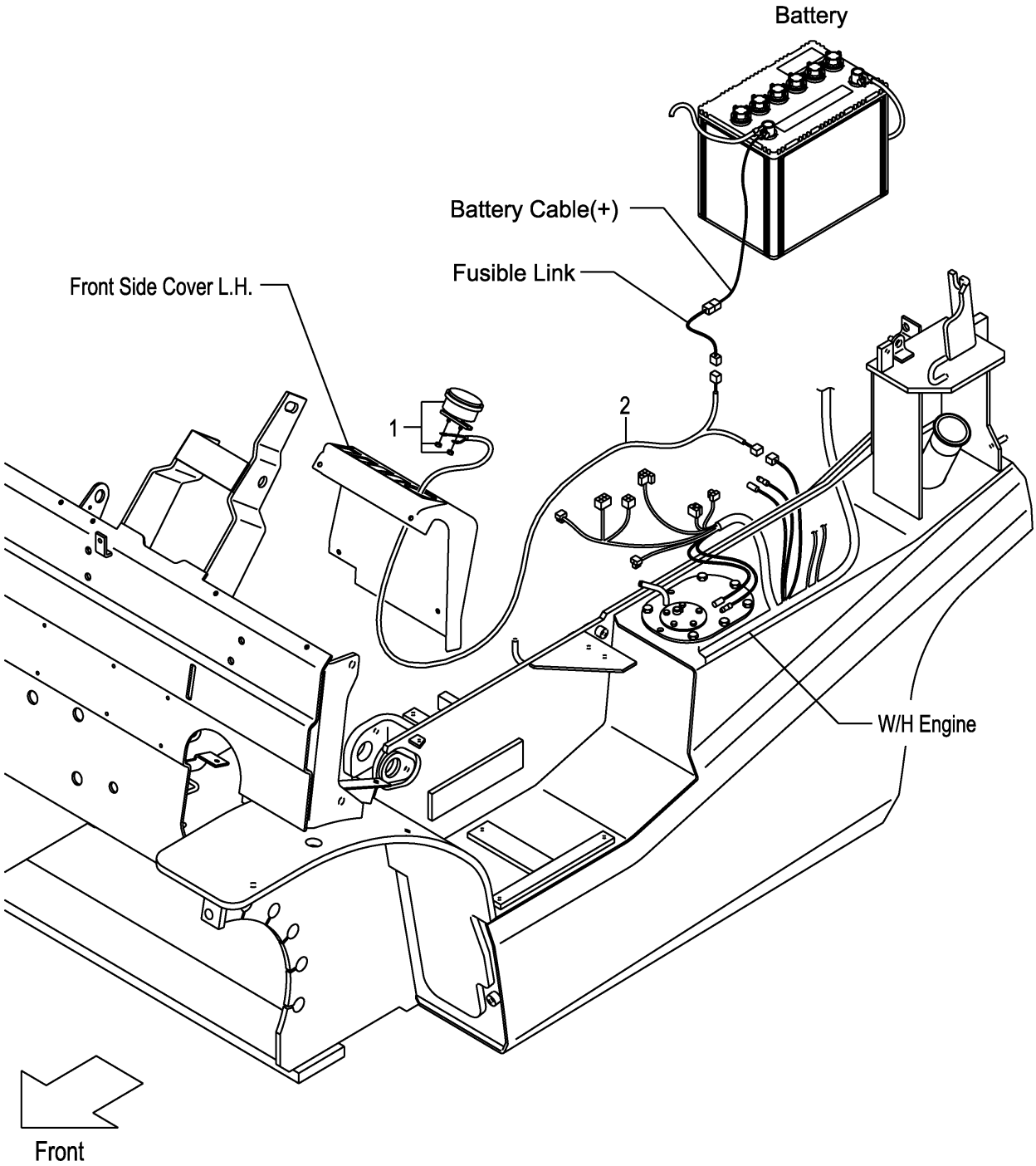

FIG.42

(F7Z226A0)

A:FD20C3Z FD20T3Z FD25C3Z FD25T3Z

Item No	Part No.	Mark	Description	Req'd	Remarks : Serial No.
1	3956323		AMMETER,50A ｱﾝﾒｰﾀ	1	[AM]
2	52N56-12051		WIRE,LEAD,AMMETER ﾜｲﾔ	1	[AM]

FIG.43 SPEED METER [SM]

(F7Z226B0) ｽﾋﾟｰﾄﾞﾒｰﾀ

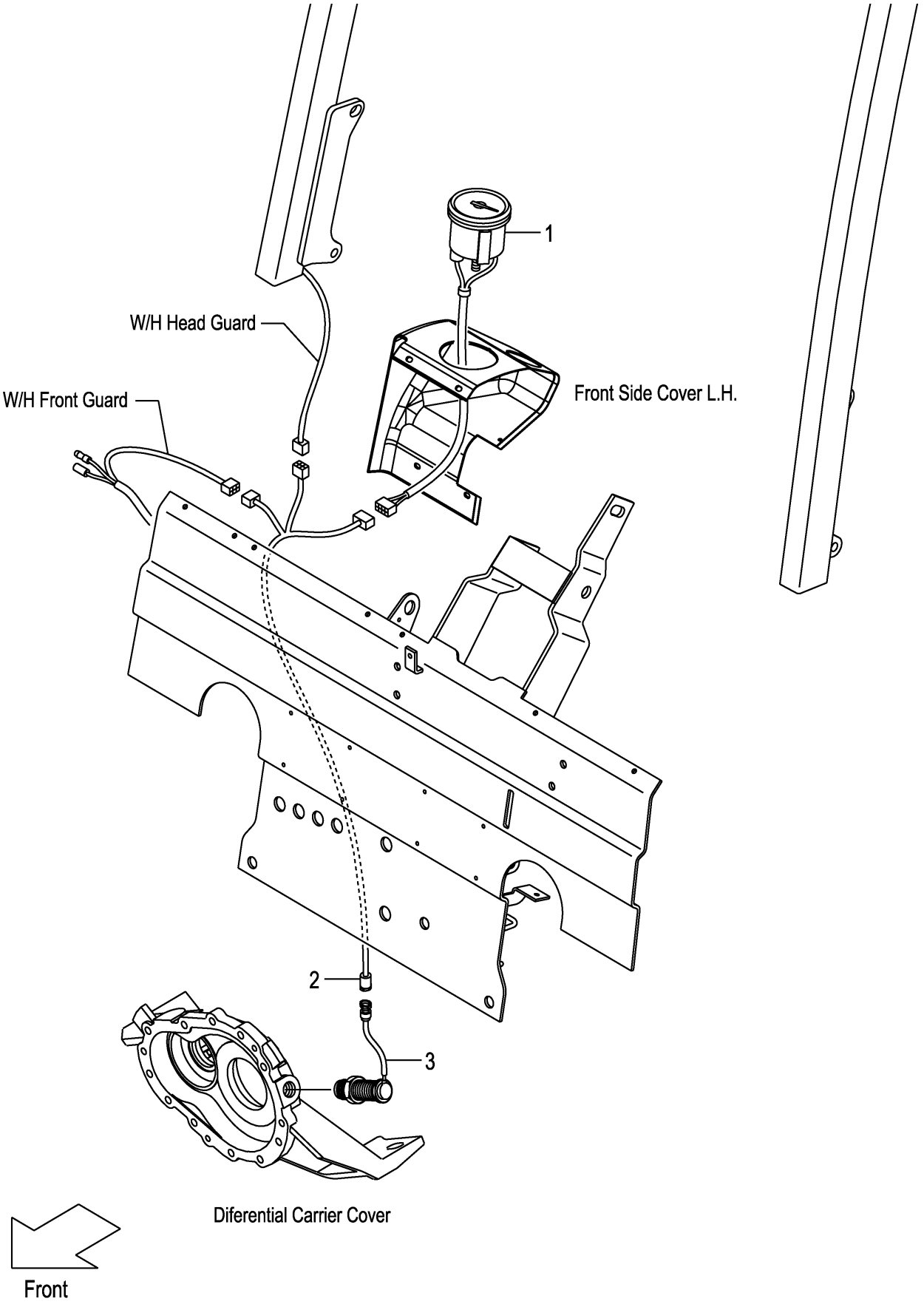

FIG.43

(F7Z226B0)

A:FD20C3Z FD20T3Z FD25C3Z FD25T3Z

Item No	Part No.	Mark	Description		Req'd	Remarks : Serial No.
1	52N57-50101		METER,SPEED	ﾒｰﾀ	1	[SM]
2	52N57-50301		WIRE-HARNESS,SM	ﾜｲﾔﾊｰﾈｽ	1	[SM]
3	16402-54331		SENSOR	ｾﾝｻ	1	[SM]

FIG.44 TORQUE CONVERTER THERMOMETER [TTM]

(F7Z226C0) トルクコンバータサーモメータ

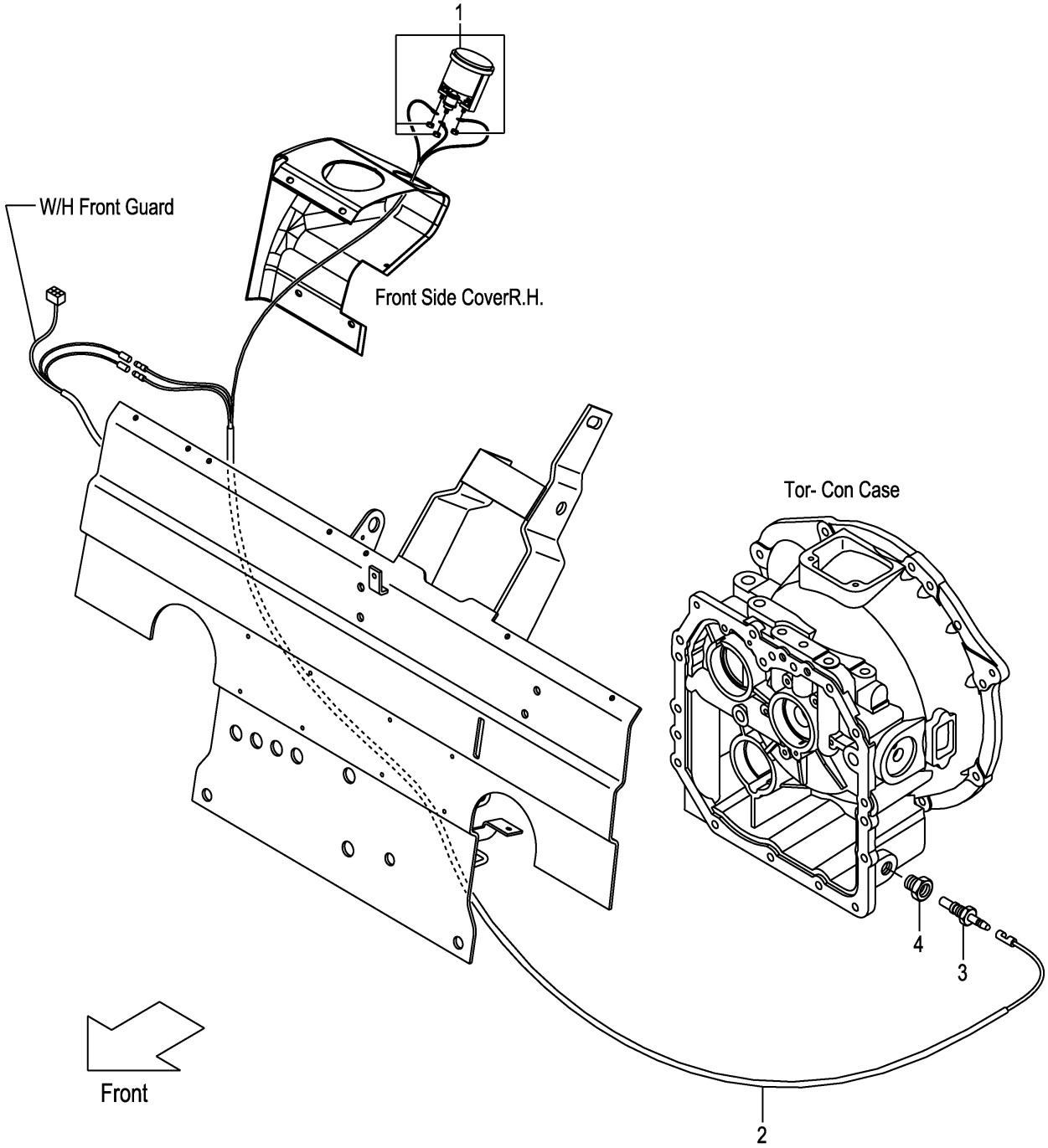

FIG.44
(F7Z226C0)

A:FD20T3Z FD25T3Z

Item No	Part No.	Mark	Description		Req'd	Remarks : Serial No.
1	52N58-82001		THERMOMETER	ｻｰﾓﾒｰﾀ	1	[TTM]
2	52N58-82101		WIRE-HARNESS,TTM	ﾜｲﾔﾊｰﾈｽ	1	[TTM]
3	23652-44001		UNIT,SENDING	ﾕﾆｯﾄ	1	[TTM]
4	521A2-42061		ADAPTER,THERMO-SW.	ｱﾀﾞﾌﾟﾀ	1	[TTM]

FIG.45 TORQUE CONVERTER PRESSURE METER [TPM]

(F7Z226D0) トルクコンバータプレッシャメータ

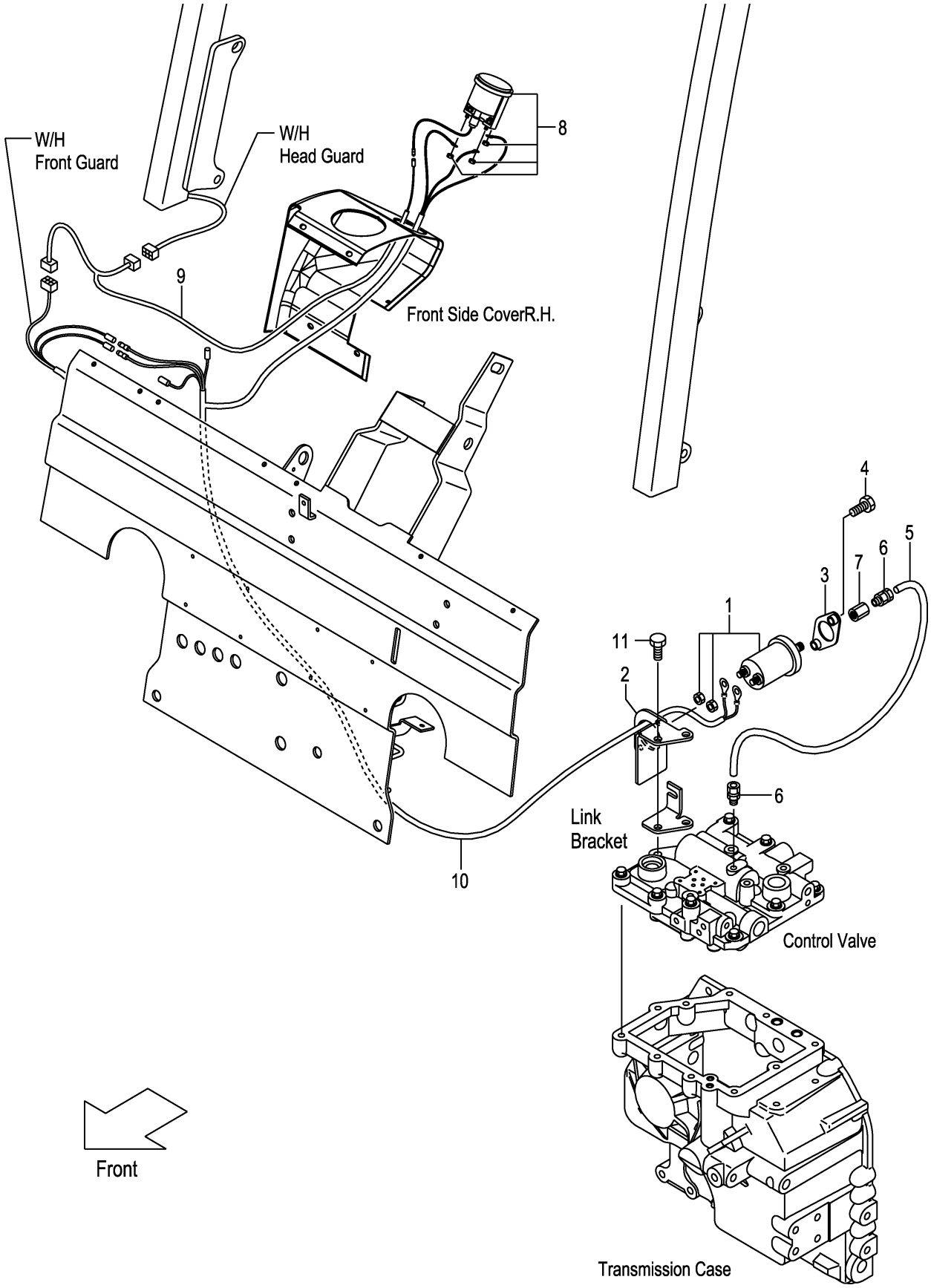

FIG.45
(F7Z226D0)

A:FD20T3Z FD25T3Z

Item No	Part No.	Mark	Description		Req'd	Remarks : Serial No.
1	516G6-92001		SENSOR,PRESS.GAUGE	ｾﾝｻ	1	[TPM]
2	52N56-92101		BRACKET,SENSOR	ﾌﾞﾗｹｯﾄ	1	[TPM]
3	516G6-92151		COVER,SENSOR	ｶﾊﾞｰ	1	[TPM]
4	01186-08025		BOLT	ﾎﾞﾙﾄ	2	[TPM]
5	52N56-92001		PIPE,CAPPER	ﾊﾟｲﾌﾟ	1	[TPM]
6	516G6-92011		JOINT	ｼﾞｮｲﾝﾄ	2	[TPM]
7	516G6-92031		ADAPTER	ｱﾀﾞﾌﾟﾀ	1	[TPM]
8	516G6-92022		GAUGE,PRESSURE	ｹﾞｰｼﾞ	1	[TPM]
9	52N56-92211		WIRE-HARNESS	ﾜｲﾔﾊｰﾈｽ	1	[TPM]
10	52N56-92201		WIRE-HARNESS,TPM	ﾜｲﾔﾊｰﾈｽ	1	[TPM]
11	01103-10035		BOLT	ﾎﾞﾙﾄ	2	[TPM]

FIG.46 SPEED DETECTOR UNIT [SAS]

(F7Z226E0) ｽﾋﾟｰﾄﾞﾃﾞｨﾃｸﾀﾕﾆｯﾄ

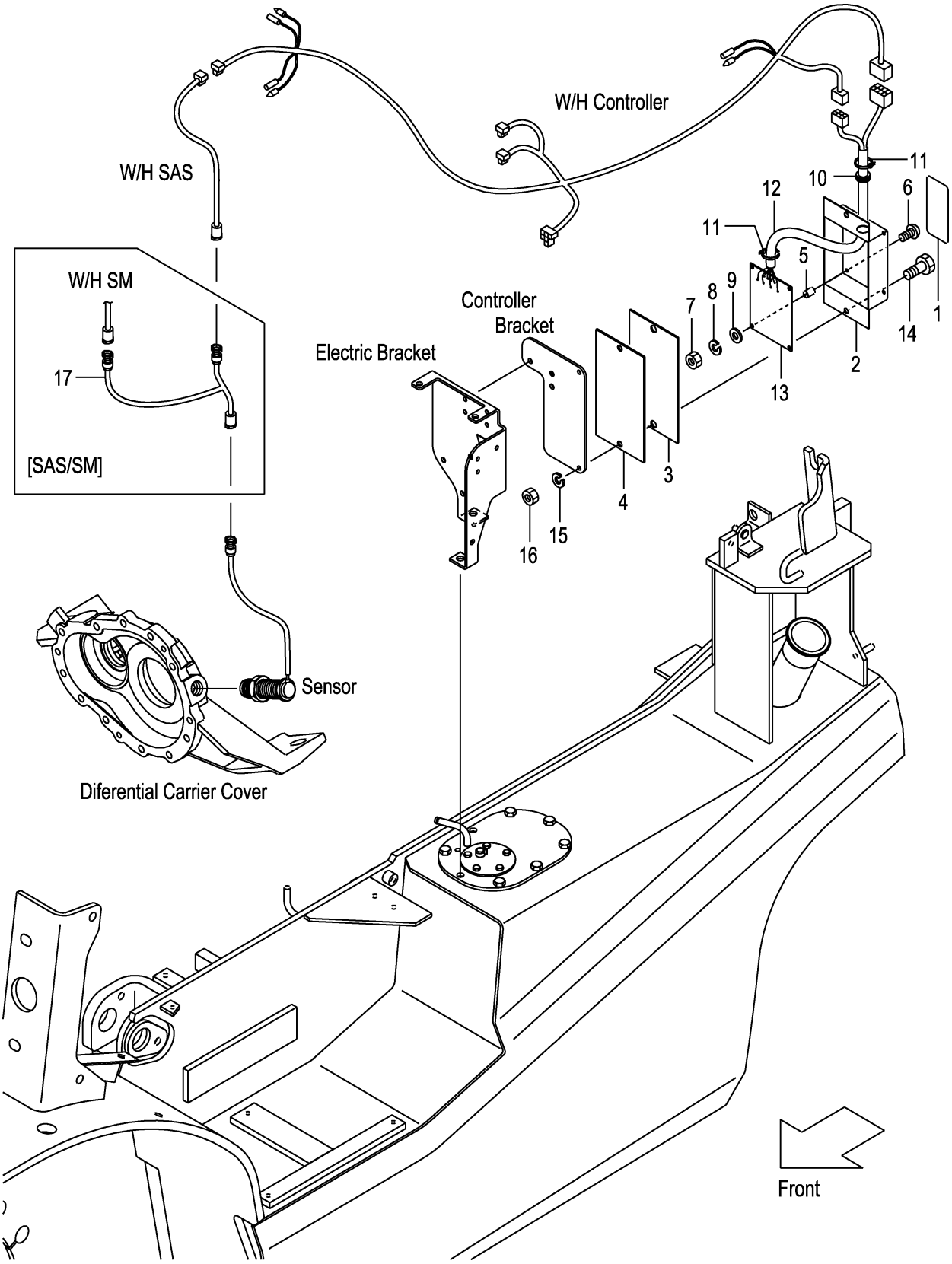

FIG.46
(F7Z226E0)

A:FD20C3Z FD20T3Z FD25C3Z FD25T3Z

Item No	Part No.	Mark	Description	Req'd	Remarks : Serial No.
A1	52N57-52051		UNIT-ASSY,SPEED-DETECTOR ｽﾋﾟｰﾄﾞﾃﾞｨﾃｸﾀﾕﾆｯﾄｱｯｾﾝ	1	[SASB05][SASR05][SASC05] INC.1-16
-	52N57-52101		UNIT-ASSY,SPEED-DETECTOR ｽﾋﾟｰﾄﾞﾃﾞｨﾃｸﾀﾕﾆｯﾄｱｯｾﾝ	1	[SASB10][SASR10][SASC10] INC.1-16
-	52N57-52151		UNIT-ASSY,SPEED-DETECTOR ｽﾋﾟｰﾄﾞﾃﾞｨﾃｸﾀﾕﾆｯﾄｱｯｾﾝ	1	[SASB15][SASR15][SASC15] INC.1-16
1	52N57-52061		PLATE,NAME ﾌﾟﾚｰﾄ	1	[SASB05][SASR05][SASC05]
-	52N57-52111		PLATE,NAME ﾌﾟﾚｰﾄ	1	[SASB10][SASR10][SASC10]
-	52N57-52161		PLATE,NAME ﾌﾟﾚｰﾄ	1	[SASB15][SASR15][SASC15]
2	55792-52601		CASE ｹｰｽ	1	[SASB05&10&15][SASR05&10&15] [SASC05&10&15]
3	55792-52611		SEAT,SPONG ｼｰﾄ	1	[SASB05&10&15][SASR05&10&15] [SASC05&10&15]
4	55792-52621		PLATE ﾌﾟﾚｰﾄ	1	[SASB05&10&15][SASR05&10&15] [SASC05&10&15]
5	27042-64311		SPACER ｽﾍﾟｰｻ	4	[SASB05&10&15][SASR05&10&15] [SASC05&10&15]
6	01030-04020		SCREW ｽｸﾘｭ	4	[SASB05&10&15][SASR05&10&15] [SASC05&10&15]
7	01400-00004		NUT ﾅｯﾄ	4	[SASB05&10&15][SASR05&10&15] [SASC05&10&15]
8	02010-00004		WASHER ﾜｯｼｬ	4	[SASB05&10&15][SASR05&10&15] [SASC05&10&15]
9	02000-00004		WASHER ﾜｯｼｬ	4	[SASB05&10&15][SASR05&10&15] [SASC05&10&15]
10	205A2-63311		GROMMET ｸﾞﾛﾒｯﾄ	1	[SASB05&10&15][SASR05&10&15] [SASC05&10&15]
11	27042-42312		BAND,CABLE ﾊﾞﾝﾄﾞ	2	[SASB05&10&15][SASR05&10&15] [SASC05&10&15]
12	55792-52641		WIRE-HARNESS,ATC ﾜｲﾔﾊｰﾈｽ	1	[SASB05&10&15][SASR05&10&15] [SASC05&10&15]
13	130C2-60302		BOARD,PRINTED ﾎﾞｰﾄﾞ	1	[SASB05&10&15][SASR05&10&15] [SASC05&10&15]
14	01100-06020		BOLT ﾎﾞﾙﾄ	2	[SASB05&10&15][SASR05&10&15] [SASC05&10&15]
15	02010-00006		WASHER ﾜｯｼｬ	2	[SASB05&10&15][SASR05&10&15] [SASC05&10&15]
16	01400-00006		NUT ﾅｯﾄ	2	[SASB05&10&15][SASR05&10&15] [SASC05&10&15]
17	539A7-52041		WIRE-HARNESS,SAS/SM ﾜｲﾔﾊｰﾈｽ	1	[SAS/SM]

FIG.47 SPEED ALARM SYSTEM [SASB]

(F7Z226F0) ｽﾋﾟｰﾄﾞｱﾗｰﾑｼｽﾃﾑ

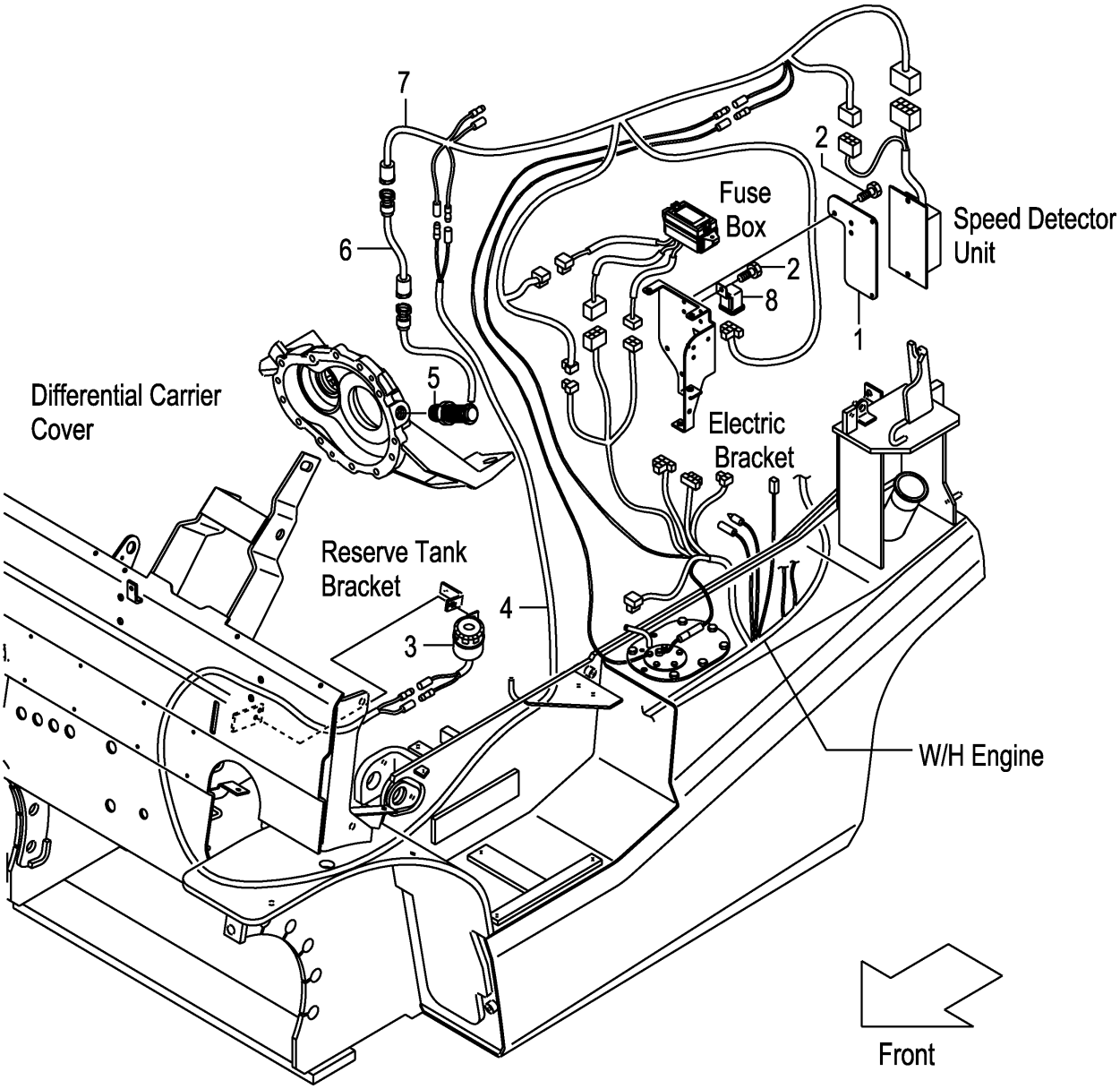

FIG.47

(F7Z226F0)

A:FD20C3Z FD20T3Z FD25C3Z FD25T3Z

Item No	Part No.	Mark	Description		Req'd	Remarks : Serial No.
1	52N57-52001		BRACKET,CONTROLLER	ﾌﾞﾗｹｯﾄ	1	[SASB05][SASB10][SASB15]
2	214A2-42621		SCREW	ｽｸﾘｭ	4	[SASB05][SASB10][SASB15]
3	529F7-52241		ALARM,BUZZER	ｱﾗｰﾑ	1	[SASB05][SASB10][SASB15]
4	558A9-92001		WIRE-HARNESS,LICENSE	ﾜｲﾔﾊｰﾈｽ	1	[SASB05][SASB10][SASB15]
5	16402-54331		SENSOR	ｾﾝｻ	1	[SASB05][SASB10][SASB15]
6	534A7-50601		WIRE-HARNESS,SAS	ﾜｲﾔﾊｰﾈｽ	1	[SASB05][SASB10][SASB15]
7	52N57-52031		WIRE-HARNESS,CONTROL	ﾜｲﾔﾊｰﾈｽ	1	[SASB05][SASB10][SASB15]
8	26062-42881		RELAY,12V	ﾘﾚｰ	1	[SASB05][SASB10][SASB15]

FIG.48 SPEED ALARM SYSTEM [SASR]

(F7Z226G0) ｽﾋﾟｰﾄﾞｱﾗｰﾑｼｽﾃﾑ

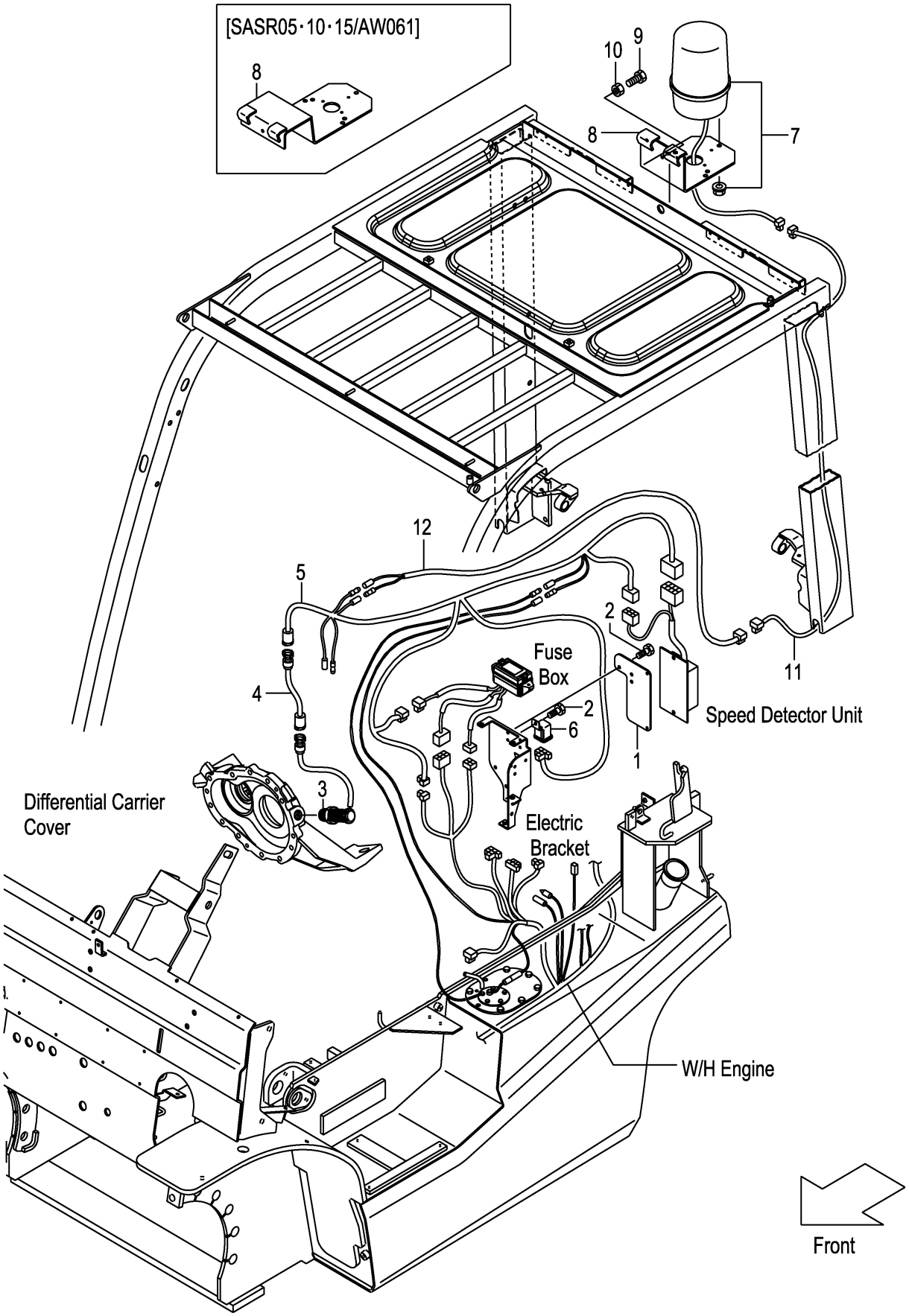

FIG.48

(F7Z226G0)

A:FD20C3Z FD20T3Z FD25C3Z FD25T3Z

Item No	Part No.	Mark	Description		Req'd	Remarks : Serial No.
1	52N57-52001		BRACKET,CONTROLLER	ﾌﾞﾗｹｯﾄ	1	[SASR05][SASR10][SASR15]
2	214A2-42621		SCREW	ｽｸﾘｭ	4	[SASR05][SASR10][SASR15]
3	16402-54331		SENSOR	ｾﾝｻ	1	[SASR05][SASR10][SASR15]
4	534A7-50601		WIRE-HARNESS,SAS	ﾜｲﾔﾊｰﾈｽ	1	[SASR05][SASR10][SASR15]
5	52N57-52031		WIRE-HARNESS,CONTROL	ﾜｲﾔﾊｰﾈｽ	1	[SASR05][SASR10][SASR15]
6	26062-42881		RELAY,12V	ﾘﾚｰ	1	[SASR05][SASR10][SASR15]
7	514A1-41001		LIGHT,REVOLVING	ﾗｲﾄ	1	[SASR05][SASR10][SASR15]
8	529F1-42251		BRACKET,REVOLVING	ﾌﾞﾗｹｯﾄ	1	[SASR05][SASR10][SASR15]
-	539A8-92251		BRACKET,REVOLVING	ﾌﾞﾗｹｯﾄ	1	[SASR05/AW061][SASR10/AW061] [SASR15/AW061]
9	01100-08020		BOLT	ﾎﾞﾙﾄ	3	[SASR05][SASR10][SASR15]
10	01400-00008		NUT	ﾅｯﾄ	3	[SASR05][SASR10][SASR15]
11	52N58-92021		WIRE,LEAD	ﾜｲﾔ	1	[SASR05][SASR10][SASR15]
12	539A7-52101		WIRE,LEAD	ﾜｲﾔ	1	[SASR05][SASR10][SASR15]

FIG.49 SPEED ALARM SYSTEM [SASC]

(F7Z226H0) ｽﾋﾟｰﾄﾞｱﾗｰﾑｼｽﾃﾑ

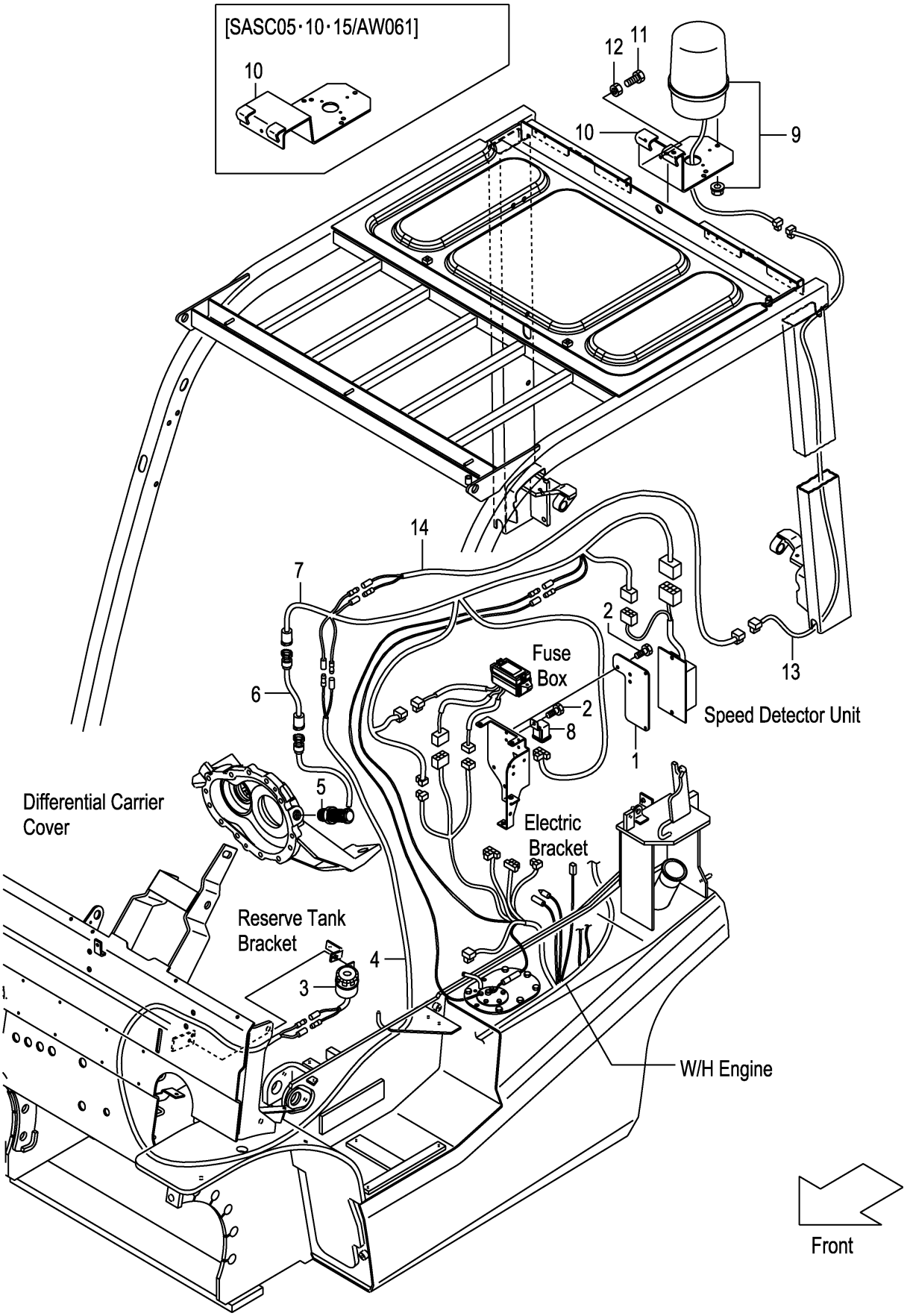

FIG.49
(F7Z226H0)

A:FD20C3Z FD20T3Z FD25C3Z FD25T3Z

Item No	Part No.	Mark	Description		Req'd	Remarks : Serial No.
1	52N57-52001		BRACKET,CONTROLLER	ﾌﾞﾗｹｯﾄ	1	[SASC05][SASC10][SASC15]
2	214A2-42621		SCREW	ｽｸﾘｭ	4	[SASC05][SASC10][SASC15]
3	529F7-52241		ALARM,BUZZER	ｱﾗｰﾑ	1	[SASC05][SASC10][SASC15]
4	558A9-92001		WIRE-HARNESS,LICENSE	ﾜｲﾔﾊｰﾈｽ	1	[SASC05][SASC10][SASC15]
5	16402-54331		SENSOR	ｾﾝｻ	1	[SASC05][SASC10][SASC15]
6	534A7-50601		WIRE-HARNESS,SAS	ﾜｲﾔﾊｰﾈｽ	1	[SASC05][SASC10][SASC15]
7	52N57-52031		WIRE-HARNESS,CONTROL	ﾜｲﾔﾊｰﾈｽ	1	[SASC05][SASC10][SASC15]
8	26062-42881		RELAY,12V	ﾘﾚｰ	1	[SASC05][SASC10][SASC15]
9	514A1-41001		LIGHT,REVOLVING	ﾗｲﾄ	1	[SASC05][SASC10][SASC15]
10	529F1-42251		BRACKET,REVOLVING	ﾌﾞﾗｹｯﾄ	1	[SASC05][SASC10][SASC15]
-	539A8-92251		BRACKET,REVOLVING	ﾌﾞﾗｹｯﾄ	1	[SASC05/AW061][SASC10/AW061] [SASC15/AW061]
11	01100-08020		BOLT	ﾎﾞﾙﾄ	3	[SASC05][SASC10][SASC15]
12	01400-00008		NUT	ﾅｯﾄ	3	[SASC05][SASC10][SASC15]
13	52N58-92021		WIRE,LEAD	ﾜｲﾔ	1	[SASC05][SASC10][SASC15]
14	539A7-52101		WIRE,LEAD	ﾜｲﾔ	1	[SASC05][SASC10][SASC15]

FIG.50 OK MONITOR [OKM]

(F7Z226J0) **OKモニタ**

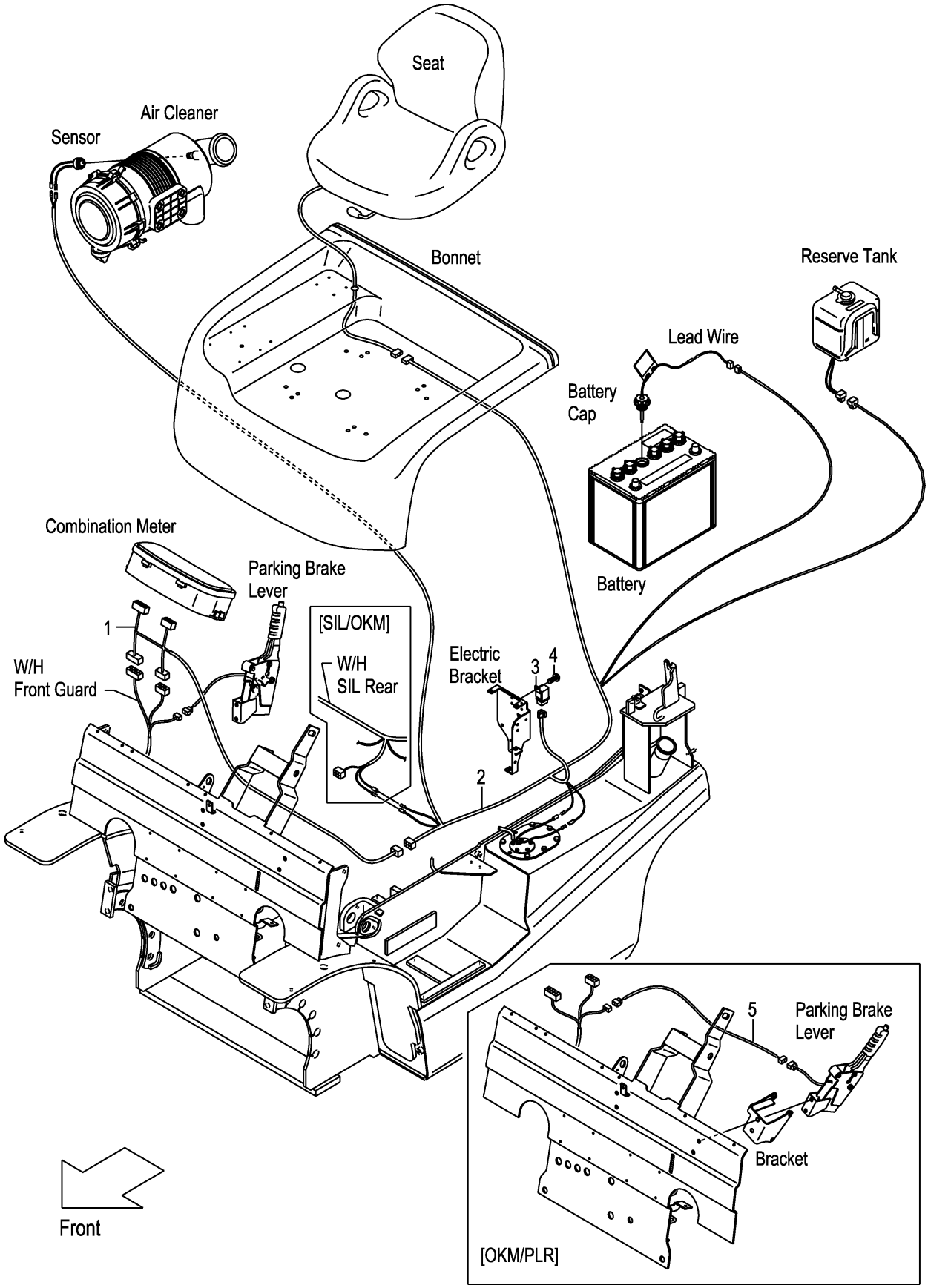

FIG.50

(F7Z226J0)

A:FD20C3Z FD20T3Z FD25C3Z FD25T3Z

Item No	Part No.	Mark	Description		Req'd	Remarks : Serial No.
1	52N56-22021		WIRE,LEAD,OKM	ﾜｲﾔ	1	[OKM]
2	52N56-22011		WIRE-HARNESS,OKM	ﾜｲﾔﾊｰﾈｽ	1	[OKM]
3	26062-42881		RELAY,12V	ﾘﾚｰ	1	[OKM]
4	214A2-42611		SCREW	ｽｸﾘｭ	1	[OKM]
5	52N56-22401		WIRE-HARNESS,SWITCH	ﾜｲﾔﾊｰﾈｽ	1	[OKM/PLR]

FIG.51 INTERLOCK (CLUTCH):[SIL]

(F7Z226M0) インターロック

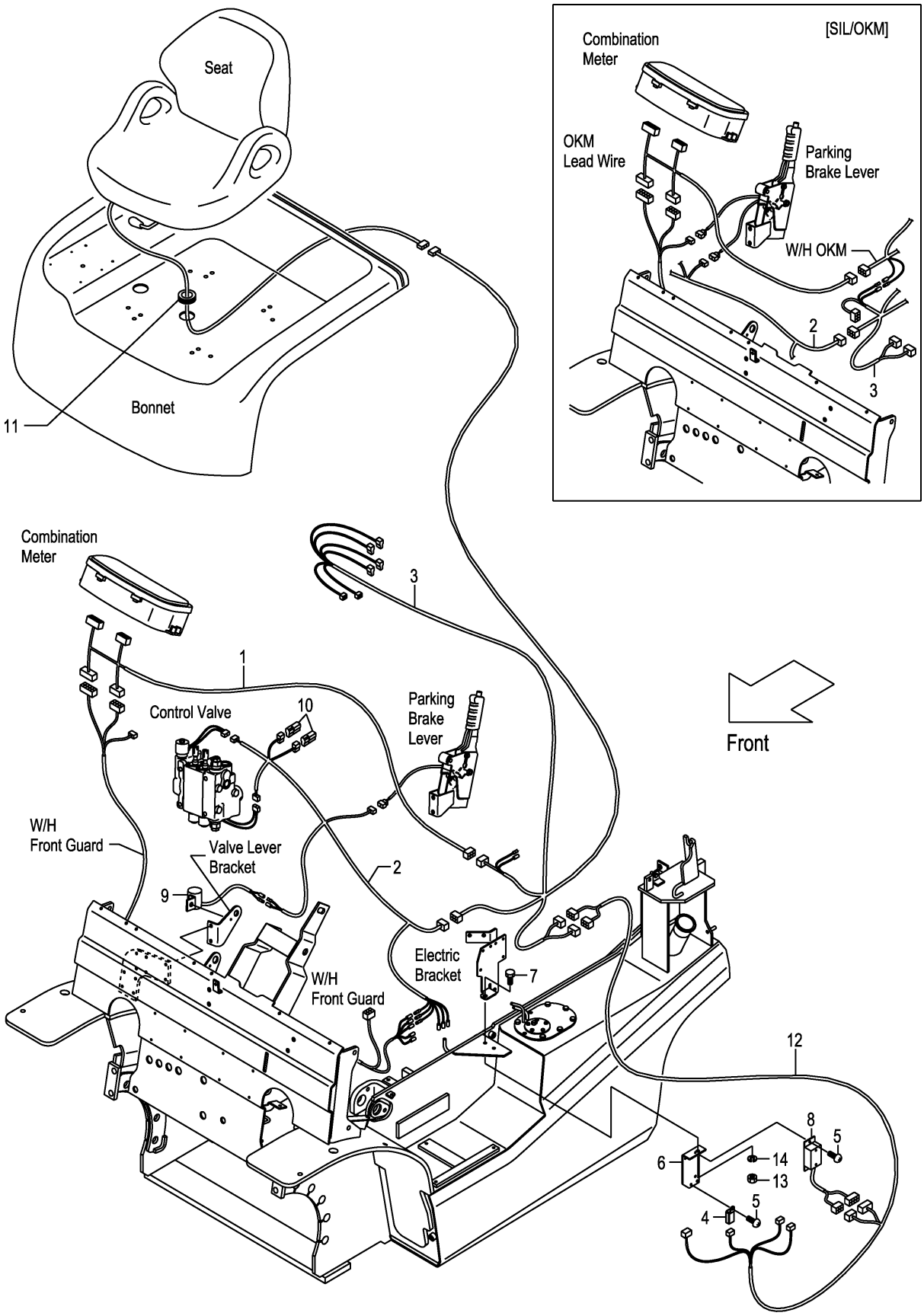

FIG.51

(F7Z226M0)

A:FD20C3Z FD25C3Z

Item No	Part No.	Mark	Description		Req'd	Remarks : Serial No.
1	52N56-22021		WIRE,LEAD,OKM	ﾜｲﾔ	1	[SIL](WITHOUT SIL/OKM)
2	52N57-E2001		WIRE-HARNESS,SIL,F	ﾜｲﾔﾊｰﾈｽ	1	[SIL]
3	52N57-E2011		WIRE-HARNESS,SIL,R	ﾜｲﾔﾊｰﾈｽ	1	[SIL]
4	209K2-42351		RELAY,1A	ﾘﾚｰ	1	[SIL]
5	214A2-42611		SCREW	ｽｸﾘｭ	3	[SIL]
6	52N57-E2201		BRACKET,RELAY	ﾌﾞﾗｹｯﾄ	1	[SIL]
7	01185-08025		BOLT	ﾎﾞﾙﾄ	1	[SIL]
8	247C2-43301		TIMER	ﾀｲﾏｰ	1	[SIL]
9	247C2-43601		BUZZER	ﾌﾞｻﾞｰ	1	[SIL]
10	230C2-42201		DIODE,3A	ﾀﾞｲｵｰﾄﾞ	2	[SIL]
11	27682-62131		GROMMET	ｸﾞﾛﾒｯﾄ	1	[SIL]
12	246B2-43221		WIRE,LEAD,SIL	ﾜｲﾔ	1	[SIL]
13	01400-00008		NUT	ﾅｯﾄ	1	[SIL]
14	02010-00008		WASHER	ﾜｯｼｬ	1	[SIL]

FIG.52 INTERLOCK (TOR-CON):[SIL]

(F7Z226N0) インターロック

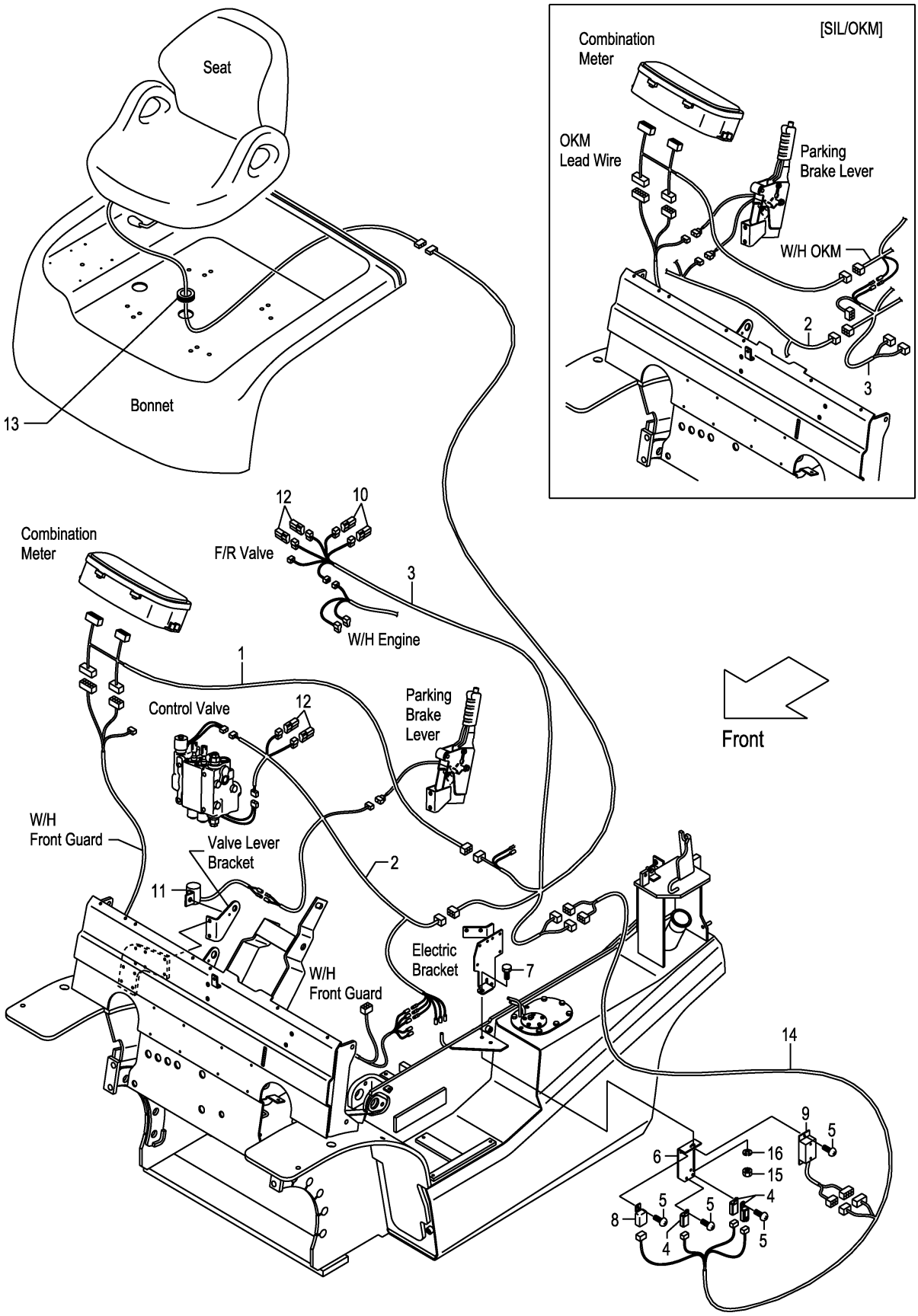

FIG.52

(F7Z226N0)

A:FD20T3Z FD25T3Z

Item No	Part No.	Mark	Description		Req'd	Remarks : Serial No.
1	52N56-22021		WIRE,LEAD,OKM	ﾜｲﾔ	1	[SIL](WITHOUT SIL/OKM)
2	52N57-E2001		WIRE-HARNESS,SIL,F	ﾜｲﾔﾊｰﾈｽ	1	[SIL]
3	52N57-E2011		WIRE-HARNESS,SIL,R	ﾜｲﾔﾊｰﾈｽ	1	[SIL]
4	209K2-42351		RELAY,1A	ﾘﾚｰ	3	[SIL]
5	214A2-42611		SCREW	ｽｸﾘｭ	5	[SIL]
6	52N57-E2201		BRACKET,RELAY	ﾌﾞﾗｹｯﾄ	1	[SIL]
7	01185-08025		BOLT	ﾎﾞﾙﾄ	1	[SIL]
8	247C2-43501		RELAY,1C	ﾘﾚｰ	1	[SIL]
9	247C2-43301		TIMER	ﾀｲﾏｰ	1	[SIL]
10	21152-42091		DIODE,1A	ﾀﾞｲｵｰﾄﾞ	2	[SIL]
11	247C2-43601		BUZZER	ﾌﾞｻﾞｰ	1	[SIL]
12	230C2-42201		DIODE,3A	ﾀﾞｲｵｰﾄﾞ	4	[SIL]
13	27682-62131		GROMMET	ｸﾞﾛﾒｯﾄ	1	[SIL]
14	246B2-43221		WIRE,LEAD,SIL	ﾜｲﾔ	1	[SIL]
15	01400-00008		NUT	ﾅｯﾄ	1	[SIL]
16	02010-00008		WASHER	ﾜｯｼｬ	1	[SIL]

FIG.53 DRIVE UNIT MOUNT (CLUTCH)

(F7Z22510) ﾄﾞﾗｲﾌﾞﾕﾆｯﾄﾏｳﾝﾄ

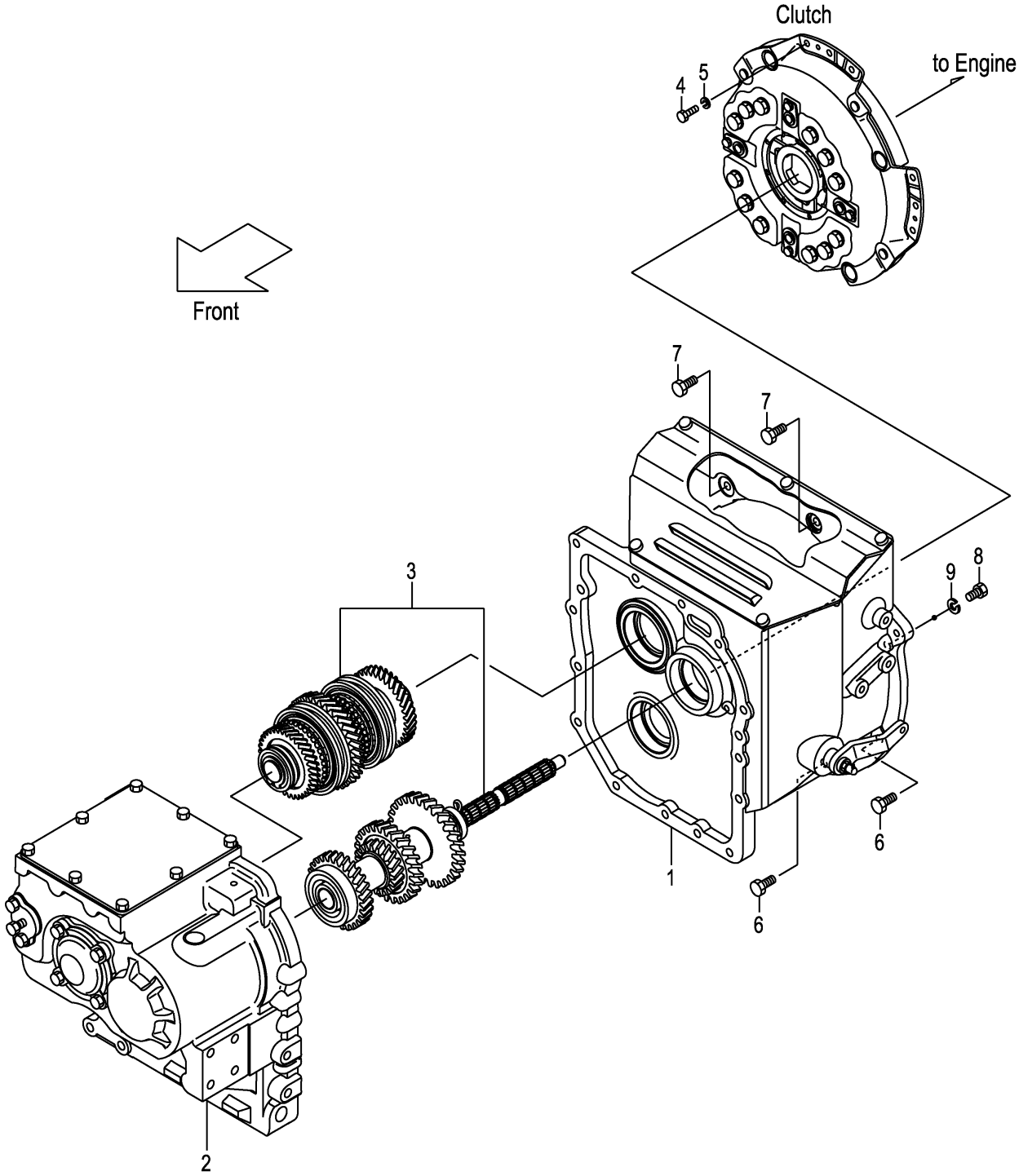

A:FD20C3Z FD25C3Z

Item No	Part No.	Mark	Description		Req'd	Remarks : Serial No.
A1	12N42-50201		UNIT-ASSY,DRIVE	ﾄﾞﾗｲﾌﾞﾕﾆｯﾄｱｯｾﾝ	1	INC.1-3
1	NO PART NO.		CLUTCH	ｸﾗｯﾁ	1	SEE FIG.56:1-17
2	NO PART NO.		CASE,T/M	ｹｰｽ	1	SEE FIG.57
3	NO PART NO.		GEAR,T/M	ｷﾞﾔｰ	1	SEE FIG.58
4	01103-08016		BOLT	ﾎﾞﾙﾄ	12	
5	02011-00008		WASHER	ﾜｯｼｬ	12	
6	01184-10030		BOLT	ﾎﾞﾙﾄ	5	
7	01184-10025		BOLT	ﾎﾞﾙﾄ	2	
8	01100-10040		BOLT	ﾎﾞﾙﾄ	1	
9	02010-00010		WASHER	ﾜｯｼｬ	1	

FIG.54 DRIVE UNIT MOUNT (TOR-CON)

(F7Z22520) ﾄﾞﾗｲﾌﾞﾕﾆｯﾄﾏｳﾝﾄ

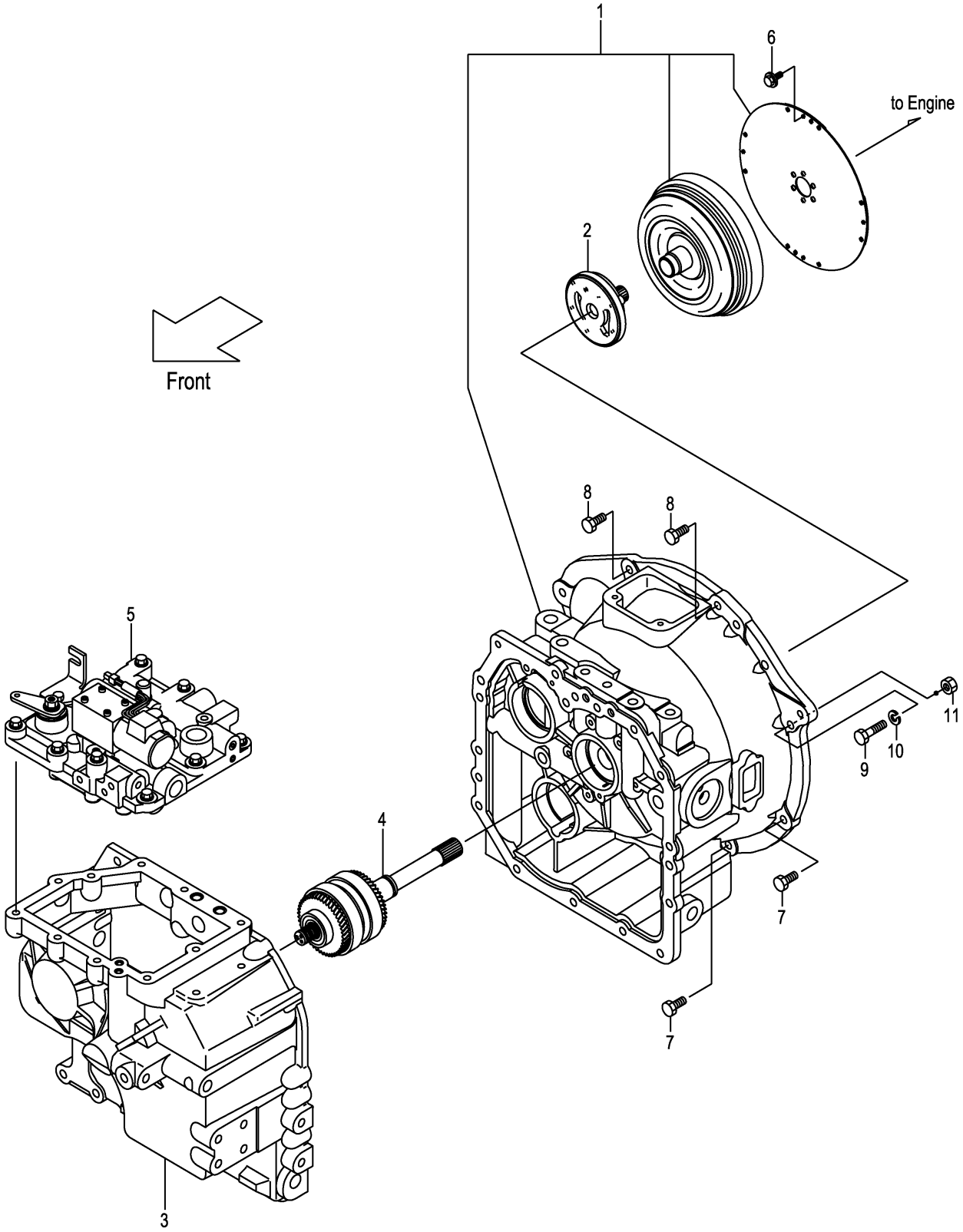

A:FD20T3Z FD25T3Z

Item No	Part No.	Mark	Description		Req'd	Remarks : Serial No.
A1	12N52-50201		UNIT-ASSY,DRIVE	ﾄﾞﾗｲﾌﾞﾕﾆｯﾄｱｯｾﾝ	1	INC.1-5
1	NO PART NO.		CASE,T/C	ｹｰｽ	1	SEE FIG.59
2	NO PART NO.		PUMP	ﾎﾟﾝﾌﾟ	1	SEE FIG.60
3	NO PART NO.		CASE,T/M	ｹｰｽ	1	SEE FIG.61
4	NO PART NO.		PACK,CLUTCH	ﾊﾟｯｸ	1	SEE FIG.62
5	NO PART NO.		VALVE,CONTROL	ﾊﾞﾙﾌﾞ	1	SEE FIG.63
6	12N53-82621		BOLT,FLANGE	ﾎﾞﾙﾄ	12	
7	01184-10030		BOLT	ﾎﾞﾙﾄ	5	
8	01184-10025		BOLT	ﾎﾞﾙﾄ	2	
9	01100-10055		BOLT	ﾎﾞﾙﾄ	1	
10	02010-00010		WASHER	ﾜｯｼｬ	1	
11	01400-00010		NUT	ﾅｯﾄ	1	

FIG.55 CHANGE LEVER (CLUTCH)

(F7Z22540) チェンジレバー

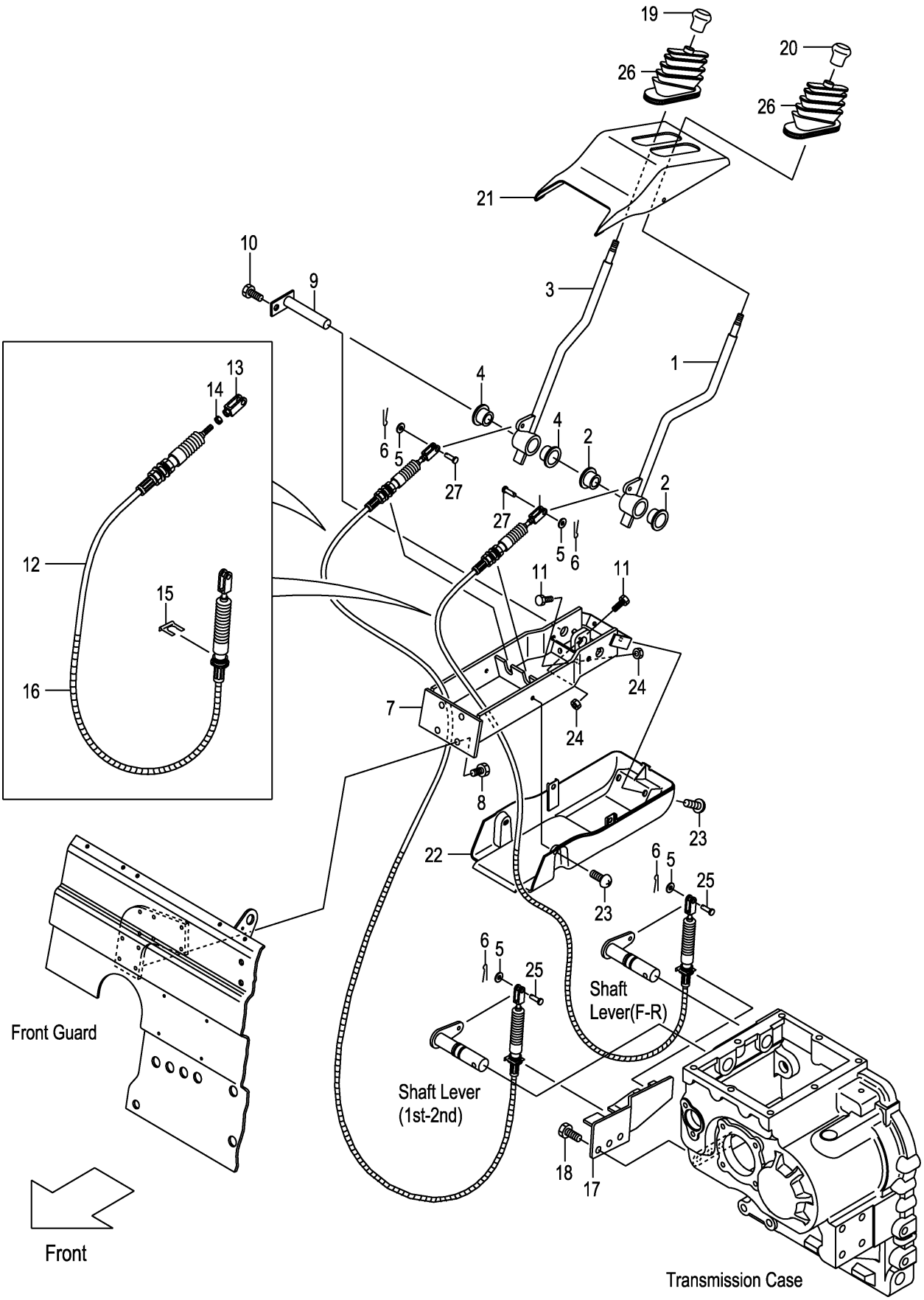

A:FD20C3Z FD25C3Z

Item No	Part No.	Mark	Description		Req'd	Remarks : Serial No.
A1	22N43-90201		LEVER-ASSY,DIRECTION		1	INC.1,2
				ﾃﾞｨﾚｸｼｮﾝﾚﾊﾞｰｱｯｾﾝ		
1	NO PART NO.	#	LEVER,DIRECTION	ﾚﾊﾞｰ	1	
2	214A7-42071		BUSHING	ﾌﾞｯｼﾝｸﾞ	2	
A2	22N43-90211		LEVER-ASSY,SPEED	ｽﾋﾟｰﾄﾞﾚﾊﾞｰｱｯｾﾝ	1	INC.3,4
3	NO PART NO.	#	LEVER,SPEED	ﾚﾊﾞｰ	1	
4	214A7-42071		BUSHING	ﾌﾞｯｼﾝｸﾞ	2	
5	02000-00006		WASHER	ﾜｯｼｬ	4	
6	02200-16010		PIN,COTTER	ﾋﾟﾝ	4	
7	22N43-90301		BRACKET	ﾌﾞﾗｹｯﾄ	1	
8	01185-08020		BOLT	ﾎﾞﾙﾄ	4	
9	22N43-92201		SHAFT	ｼｬﾌﾄ	1	
10	01183-08012		BOLT	ﾎﾞﾙﾄ	1	
11	01100-08025		BOLT	ﾎﾞﾙﾄ	4	
A3	22N43-90511		CABLE-ASSY	ｹｰﾌﾞﾙｱｯｾﾝ	2	INC.12-16
12	22N43-93001		CABLE	ｹｰﾌﾞﾙ	2	
13	22N43-93021		END	ｴﾝﾄﾞ	2	
14	01402-00006		NUT	ﾅｯﾄ	2	
15	22N43-93011		CLAMP	ｸﾗﾝﾌﾟ	2	
16	22N43-93031		PROTECTOR	ﾌﾟﾛﾃｸﾀ	2	
17	22N43-92301		BRACKET	ﾌﾞﾗｹｯﾄ	1	
18	01213-10025		BOLT	ﾎﾞﾙﾄ	3	
19	214A2-52002		KNOB,SPEED	ﾉﾌﾞ	1	
20	214A2-52012		KNOB,DIRECTION	ﾉﾌﾞ	1	
21	22N43-92701	+	COVER,LH	ｶﾊﾞｰ	1	1-109
-	22N43-92901		COVER,UPPER	ｶﾊﾞｰ	1	110-
22	22N43-92711	+	COVER,RH	ｶﾊﾞｰ	1	1-109
-	22N43-92911		COVER,UNDER	ｶﾊﾞｰ	1	110-
23	01033-06012		SCREW	ｽｸﾘｭ	4	1-109
-	225R6-42031		SCREW	ｽｸﾘｭ	4	110-
24	01402-00008		NUT	ﾅｯﾄ	4	
25	02262-06015		PIN,CLEVIS	ﾋﾟﾝ	2	
26	22N43-92731		BOOT	ﾌﾞｰﾂ	2	
27	02262-06020		PIN,CLEVIS	ﾋﾟﾝ	2	

FIG.56 CLUTCH (CLUTCH)

(F7Z22550) クラッチ

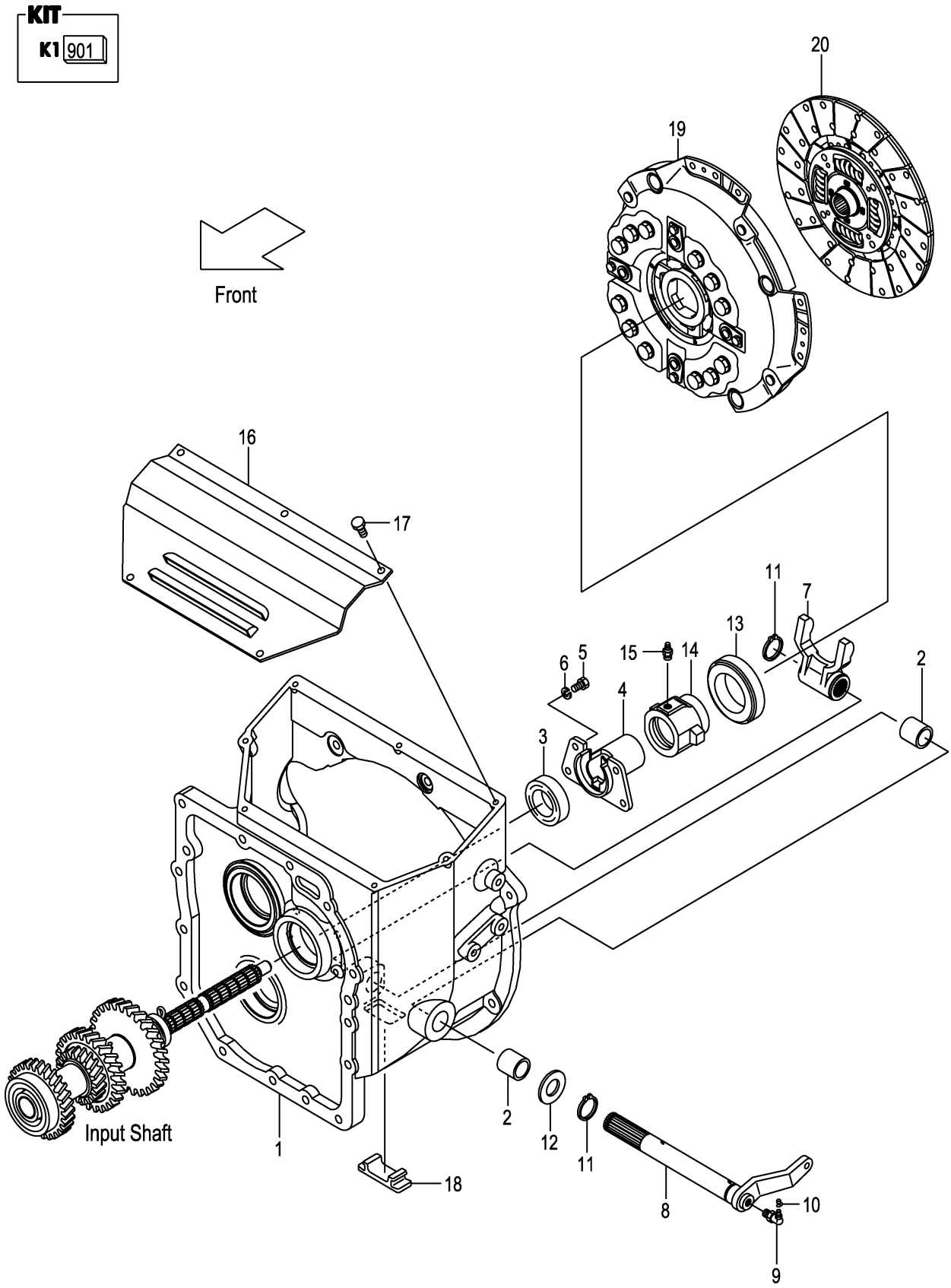

A:FD20C3Z FD25C3Z

Item No	Part No.	Mark	Description		Req'd	Remarks : Serial No.
901	12N43-19801	K1	KIT,REPAIR,T/M	ﾘﾍﾟｱｷｯﾄ	1	INC.3,11,FIG.58:3,5,13, 17,19,27,28,30
1	12N43-12001		HOUSING,CLUTCH	ﾊｳｼﾞﾝｸﾞ	1	
2	12003-12021		BUSHING	ﾌﾞｯｼﾝｸﾞ	2	
3	12N43-12011	*	SEAL,OIL	ｼｰﾙ	1	
4	12N43-12021		SUPPORT,RETAINER	ｻﾎﾟｰﾄ	1	
5	01103-08016		BOLT	ﾎﾞﾙﾄ	4	
6	02011-00008		WASHER	ﾜｯｼｬ	4	
7	12N43-12101		YOKE	ﾖｰｸ	1	
8	12N43-12111		SHAFT	ｼｬﾌﾄ	1	
9	04901-00190		FITTING	ﾌｨｯﾃｨﾝｸﾞ	1	
10	22199-12401		CAP,NIPPLE	ｷｬｯﾌﾟ	1	
11	02100-00025	*	RING,SNAP	ｽﾅｯﾌﾟﾘﾝｸﾞ	2	
12	02000-00024		WASHER	ﾜｯｼｬ	1	
13	135C3-12081		BEARING,THRUST	ﾍﾞｱﾘﾝｸﾞ	1	
14	12N43-12201		RETAINER,BEARING	ﾘﾃｰﾅ	1	
15	04901-00100		FITTING	ﾌｨｯﾃｨﾝｸﾞ	1	
16	12N43-12151		COVER,CLUTCH-HOUSING	ｶﾊﾞｰ	1	
17	01183-08016		BOLT	ﾎﾞﾙﾄ	5	
18	12N53-82061		COVER,UNDER	ｶﾊﾞｰ	1	
19	10A63-10201		COVER,CLUTCH	ｶﾊﾞｰ	1	
20	12N43-10211		DISK,CLUTCH	ﾃﾞｨｽｸ	1	

FIG.57 MISSION CASE (CLUTCH)

(F7Z22560) ミッションケース

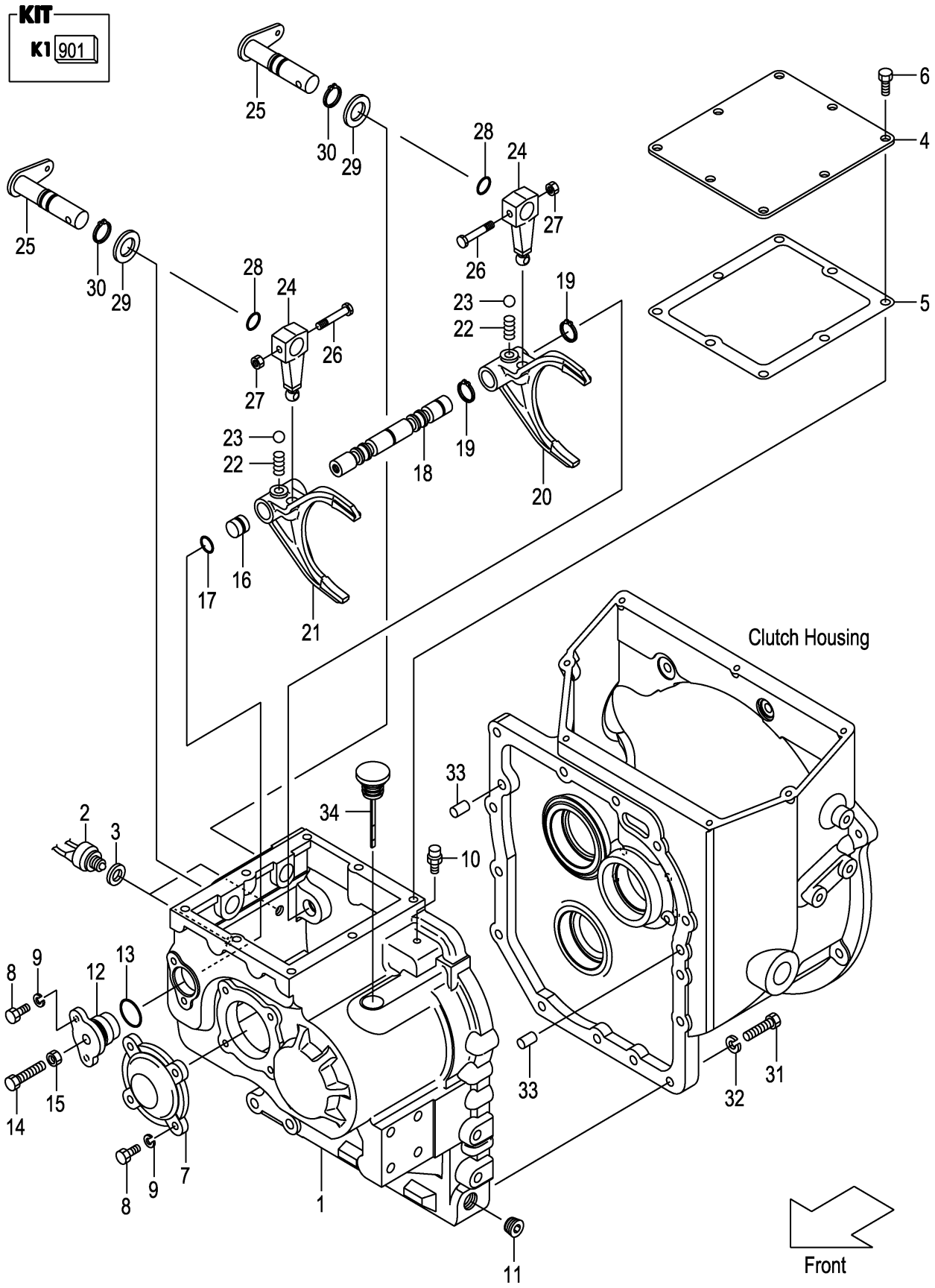

A:FD20C3Z FD25C3Z

Item No	Part No.	Mark	Description		Req'd	Remarks : Serial No.
901	12N43-19811	K1	KIT,REPAIR,SHIFT-ROD	ﾘﾍﾟｱｷｯﾄ	1	INC.3,5,13,17,19,27,28,30
1	12N43-42001		CASE,T/M	ｹｰｽ	1	
2	12003-42451		SWITCH,BACK-LAMP	ｽｲｯﾁ	2	
3	12003-42461	*	PACKING,BACK-LAMP	ﾊﾟｯｷﾝｸﾞ	2	
4	12N43-42511		COVER,CASE	ｶﾊﾞｰ	1	
5	12N43-42521	*	GASKET,CASE-COVER	ｶﾞｽｹｯﾄ	1	
6	01184-10016		BOLT	ﾎﾞﾙﾄ	8	
7	12N43-42031		COVER,BEARING	ｶﾊﾞｰ	1	
8	01103-08020		BOLT	ﾎﾞﾙﾄ	6	
9	02011-00008		WASHER	ﾜｯｼｬ	6	
10	15573-42151		BREATHER,AIR	ﾌﾞﾘｰｻﾞ	1	
11	12163-82541		PLUG	ﾌﾟﾗｸﾞ	1	
12	12003-42052		SUPPORT,ARM-SHAFT	ｻﾎﾟｰﾄ	1	
13	03310-00300	*	O-RING	Oﾘﾝｸﾞ	1	
14	01123-10045		BOLT	ﾎﾞﾙﾄ	1	
15	01400-00010		NUT	ﾅｯﾄ	1	
16	12003-42061		SPACER	ｽﾍﾟｰｻ	1	
17	03300-00160	*	O-RING	Oﾘﾝｸﾞ	1	
18	12N43-42401		ROD,SHIFT	ﾛｯﾄﾞ	1	
19	02100-00020	*	RING,SNAP	ｽﾅｯﾌﾟﾘﾝｸﾞ	2	
20	12N43-42411		FORK,SHIFT,F-R	ﾌｫｰｸ	1	
21	12N43-42421		FORK,SHIFT,H-L	ﾌｫｰｸ	1	
22	12N43-42481		SPRING	ｽﾌﾟﾘﾝｸﾞ	2	
23	03190-00013		BALL,STEEL	ﾎﾞｰﾙ	2	
24	12N43-42431		ARM,SHIFT	ｱｰﾑ	2	
25	12N43-42441		LEVER,SHIFT	ﾚﾊﾞｰ	2	
26	12N43-42471		BOLT	ﾎﾞﾙﾄ	2	
27	23652-12051	*	NUT	ﾅｯﾄ	2	
28	03300-00180	*	O-RING	Oﾘﾝｸﾞ	2	
29	02000-00022		WASHER	ﾜｯｼｬ	2	
30	02100-00022	*	RING,SNAP	ｽﾅｯﾌﾟﾘﾝｸﾞ	2	
31	01103-10040		BOLT	ﾎﾞﾙﾄ	14	
32	02011-00010		WASHER	ﾜｯｼｬ	14	
33	02212-12020		PIN,PARALLEL	ﾋﾟﾝ	2	
34	12N43-42501		GAUGE,LEVEL	ｹﾞｰｼﾞ	1	

FIG.58 MISSION GEAR (CLUTCH)

(F7Z22570) ﾐｯｼｮﾝｷﾞﾔｰ

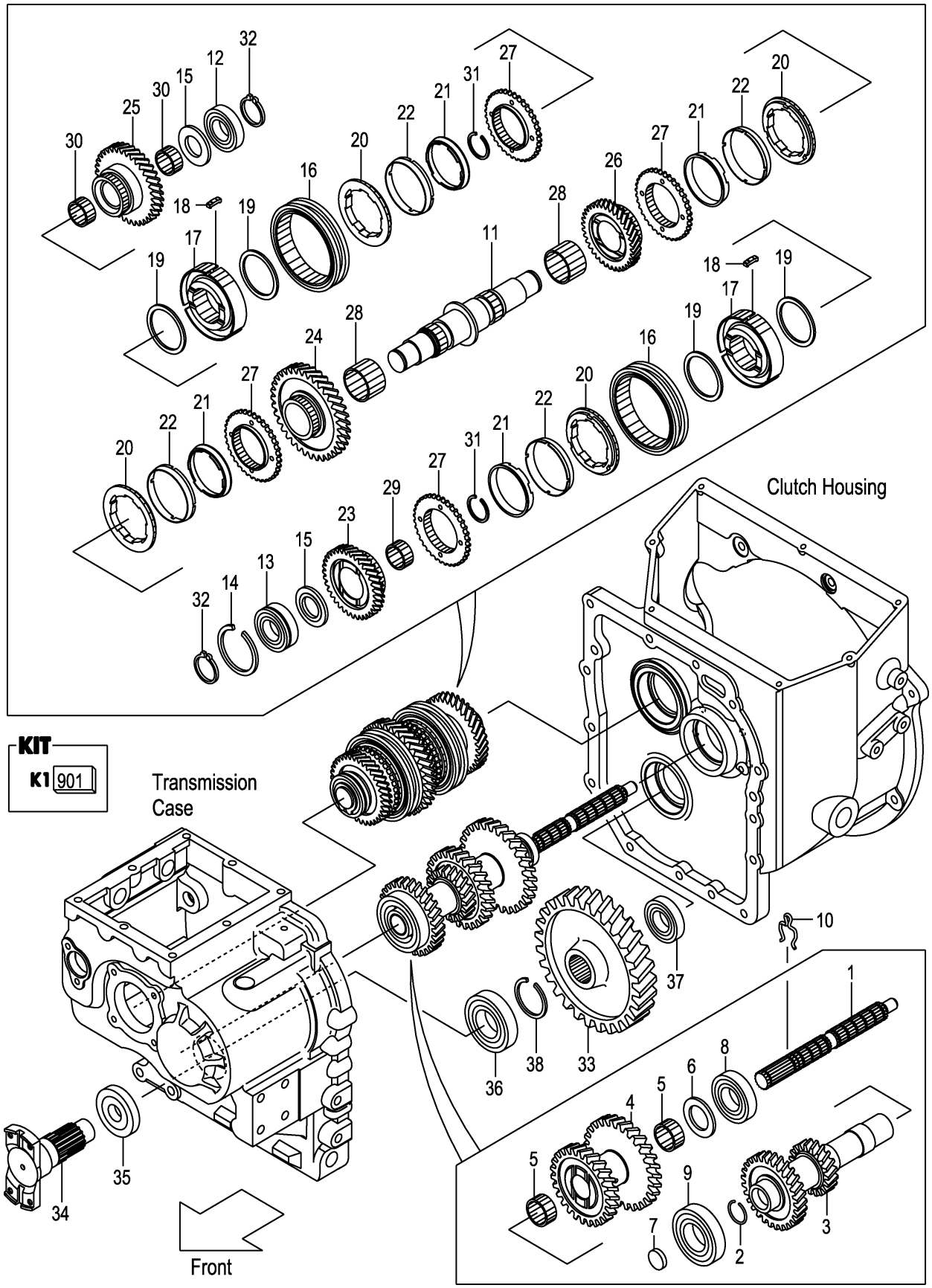

A:FD20C3Z FD25C3Z

Item No	Part No.	Mark	Description		Req'd	Remarks : Serial No.
901	12N43-19801	K1	KIT,REPAIR,T/M	ﾘﾍﾟｱｷｯﾄ	1	INC.2,7,14,32,35,38, FIG.56:3,11
1	12N43-42051		SHAFT,MAIN-DRIVE	ｼｬﾌﾄ	1	
2	12N43-42071	*	RING,SNAP	ｽﾅｯﾌﾟﾘﾝｸﾞ	1	
3	12N43-42101		SHAFT,INPUT	ｼｬﾌﾄ	1	
4	12N43-42111		GEAR,COUNTER	ｷﾞﾔｰ	1	
5	12N43-42121		BEARING,NEEDLE	ﾍﾞｱﾘﾝｸﾞ	2	
6	12N43-42131		PLATE,THRUST	ﾌﾟﾚｰﾄ	1	
7	134A3-42071	*	CAP	ｷｬｯﾌﾟ	1	
8	03000-06207		BEARING,BALL	ﾍﾞｱﾘﾝｸﾞ	1	
9	03000-06208		BEARING,BALL	ﾍﾞｱﾘﾝｸﾞ	1	
10	12N43-42061		PIN,LOCK	ﾋﾟﾝ	1	
11	12N43-42141		SHAFT,MAIN	ｼｬﾌﾄ	1	
12	03000-06306		BEARING,BALL	ﾍﾞｱﾘﾝｸﾞ	1	
13	03003-06306		BEARING,BALL	ﾍﾞｱﾘﾝｸﾞ	1	
14	03192-30072	*	RING,SNAP	ｽﾅｯﾌﾟﾘﾝｸﾞ	1	
15	12N43-42191		PLATE,THRUST	ﾌﾟﾚｰﾄ	2	
16	12N43-42151		SLEEVE	ｽﾘｰﾌﾞ	2	
17	12N43-42161		HUB,CLUTCH	ﾊﾌﾞ	2	
18	12N43-42171		INSERT	ｲﾝｻｰﾄ	6	
19	15573-42021		SPRING,INSERT	ｽﾌﾟﾘﾝｸﾞ	4	
A1	12N43-40251		RING-ASSY,SYNCHRO	ｼﾝｸﾛﾘﾝｸﾞｱｯｾﾝ	4	INC.20-22
20	12N43-42201		RING,OUTER,SYNCHRO	ﾘﾝｸﾞ	4	
21	12N43-42211		RING,INNER,SYNCHRO	ﾘﾝｸﾞ	4	
22	12N43-42221		CORN,MIDDLE	ｺｰﾝ	4	
23	12N43-42251		GEAR,HIGH-SPEED	ｷﾞﾔｰ	1	
24	12N43-42261		GEAR,LOW-SPEED	ｷﾞﾔｰ	1	
25	12N43-42271		GEAR,FORWARD	ｷﾞﾔｰ	1	
26	12N43-42281		GEAR,REVERSE	ｷﾞﾔｰ	1	
27	12N43-42291		GEAR	ｷﾞﾔｰ	4	
28	12N43-42301		BEARING,NEEDLE	ﾍﾞｱﾘﾝｸﾞ	2	
29	12003-42251		BEARING,NEEDLE	ﾍﾞｱﾘﾝｸﾞ	1	
30	12N43-42321		BEARING,NEEDLE	ﾍﾞｱﾘﾝｸﾞ	2	
31	02120-00038		RING,SNAP	ｽﾅｯﾌﾟﾘﾝｸﾞ	2	
32	02100-00030	*	RING,SNAP	ｽﾅｯﾌﾟﾘﾝｸﾞ	2	
-	12N43-42551	*	RING,SNAP,T-1.7	ｽﾅｯﾌﾟﾘﾝｸﾞ	(2)	
-	12N43-42561	*	RING,SNAP,T-1.8	ｽﾅｯﾌﾟﾘﾝｸﾞ	(2)	
-	12N43-42571	*	RING,SNAP,T-1.9	ｽﾅｯﾌﾟﾘﾝｸﾞ	(2)	
-	12N43-42581	*	RING,SNAP,T-2.0	ｽﾅｯﾌﾟﾘﾝｸﾞ	(2)	
33	12N43-42351		GEAR,OUTPUT	ｷﾞﾔｰ	1	
34	12N53-82201		FLANGE,T/M-OUTPUT	ﾌﾗﾝｼﾞ	1	
35	12N53-82211	*	SEAL,OIL	ｼｰﾙ	1	
36	03000-06208		BEARING,BALL	ﾍﾞｱﾘﾝｸﾞ	1	
37	03000-06306		BEARING,BALL	ﾍﾞｱﾘﾝｸﾞ	1	
38	02120-00040	*	RING,SNAP	ｽﾅｯﾌﾟﾘﾝｸﾞ	1	

FIG.59 TORQUE CONVERTER CASE (TOR-CON)

(F7Z22580) トルクコンバータケース

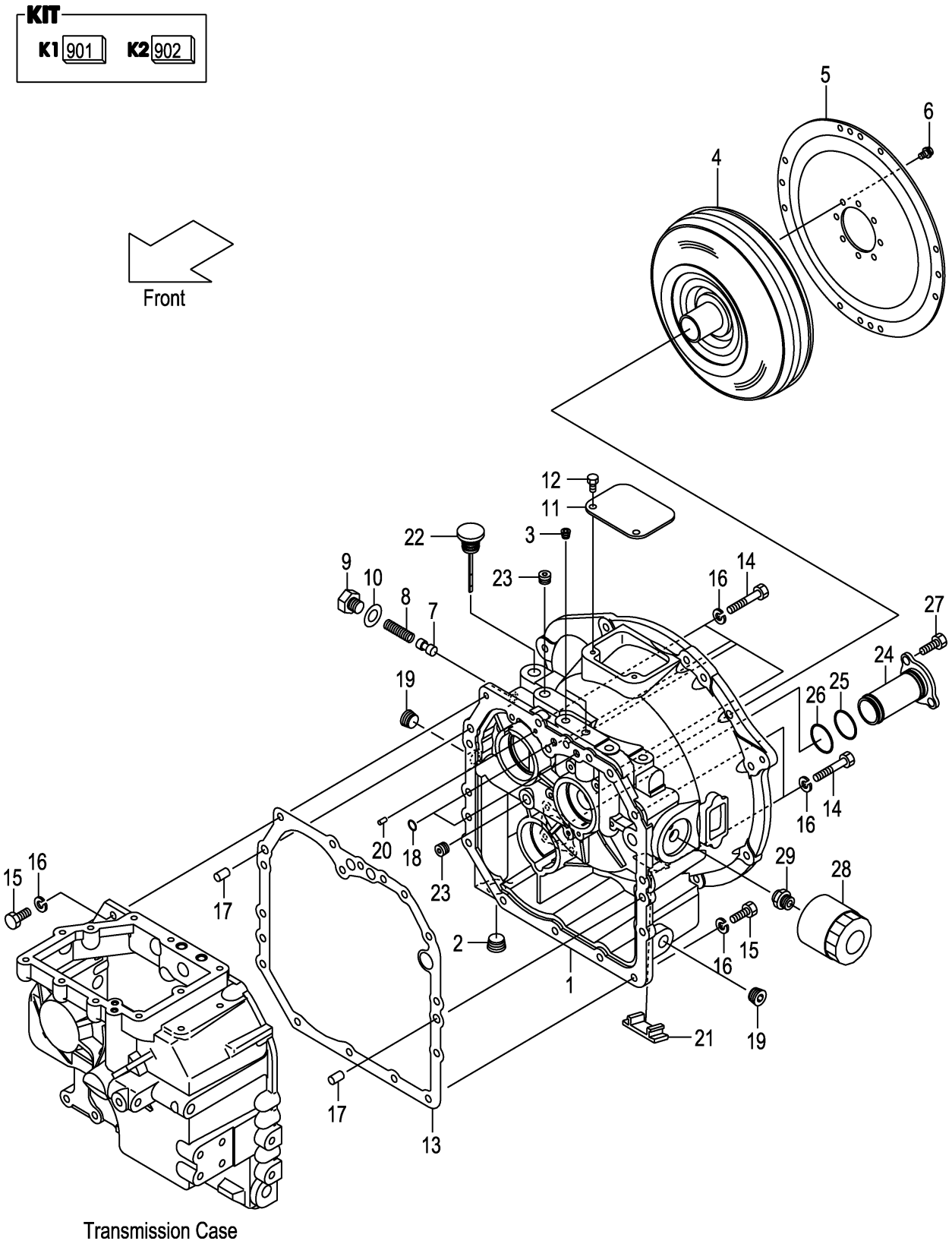

A:FD20T3Z FD25T3Z

Item No	Part No.	Mark	Description		Req'd	Remarks : Serial No.
901	12N53-89801	K1	KIT,REPAIR,T/M	ﾘﾍﾟｱｷｯﾄ	1	INC.10,13,18,FIG.61:9,11-14
902	12N53-89811	K2	KIT,SUCTION-STRAINER	ｻｸｼｮﾝｽﾄﾚｰﾅｷｯﾄ	1	INC.24-26
1	12N53-82001		CASE,TOR-CON	ｹｰｽ	1	
2	27397-52101		PLUG	ﾌﾟﾗｸﾞ	1	
3	116H3-82101		PLUG	ﾌﾟﾗｸﾞ	2	
4	12N53-80301		TORQUE-CONVERTER	ﾄﾙｸｺﾝﾊﾞｰﾀ	1	
5	12N53-80311		PLATE,INPUT	ﾌﾟﾚｰﾄ	1	
6	12N53-82621		BOLT,FLANGE	ﾎﾞﾙﾄ	8	
7	12N53-82011		PISTON	ﾋﾟｽﾄﾝ	1	
8	12163-82331		SPRING	ｽﾌﾟﾘﾝｸﾞ	1	
9	12N53-82021		PLUG	ﾌﾟﾗｸﾞ	1	
10	12163-82421	*	PACKING	ﾊﾟｯｷﾝｸﾞ	1	
11	12N53-82041		COVER,UPPER	ｶﾊﾞｰ	1	
12	01185-08016		BOLT	ﾎﾞﾙﾄ	2	
13	12N53-82081	*	GASKET	ｶﾞｽｹｯﾄ	1	
14	01103-10065		BOLT	ﾎﾞﾙﾄ	6	
15	01103-10030		BOLT	ﾎﾞﾙﾄ	9	
16	02011-00010		WASHER	ﾜｯｼｬ	15	
17	02212-12020		PIN,PARALLEL	ﾋﾟﾝ	2	
18	15583-82521	*	O-RING	Oﾘﾝｸﾞ	2	
19	12163-82541		PLUG	ﾌﾟﾗｸﾞ	2	
20	15943-83261		PIN,PARALLEL	ﾋﾟﾝ	1	
21	12N53-82061		COVER,UNDER	ｶﾊﾞｰ	1	
22	12N53-82711		GAUGE,LEVEL	ｹﾞｰｼﾞ	1	
23	24329-45541		PLUG	ﾌﾟﾗｸﾞ	2	
24	NO PART NO.	#*	STRAINER,SUCTION	ｽﾄﾚｰﾅ	1	
25	115G3-82111	*	O-RING	Oﾘﾝｸﾞ	1	
26	12N53-82761	*	O-RING	Oﾘﾝｸﾞ	1	
27	01100-08020		BOLT	ﾎﾞﾙﾄ	3	
28	115G3-82241		FILTER,OIL	ﾌｨﾙﾀ	1	
29	115G3-82251		NIPPLE	ﾆｯﾌﾟﾙ	1	

FIG.60 CHARGING PUMP (TOR-CON)

(F7Z22590) ﾁｬｰｼﾞﾝｸﾞﾎﾟﾝﾌﾟ

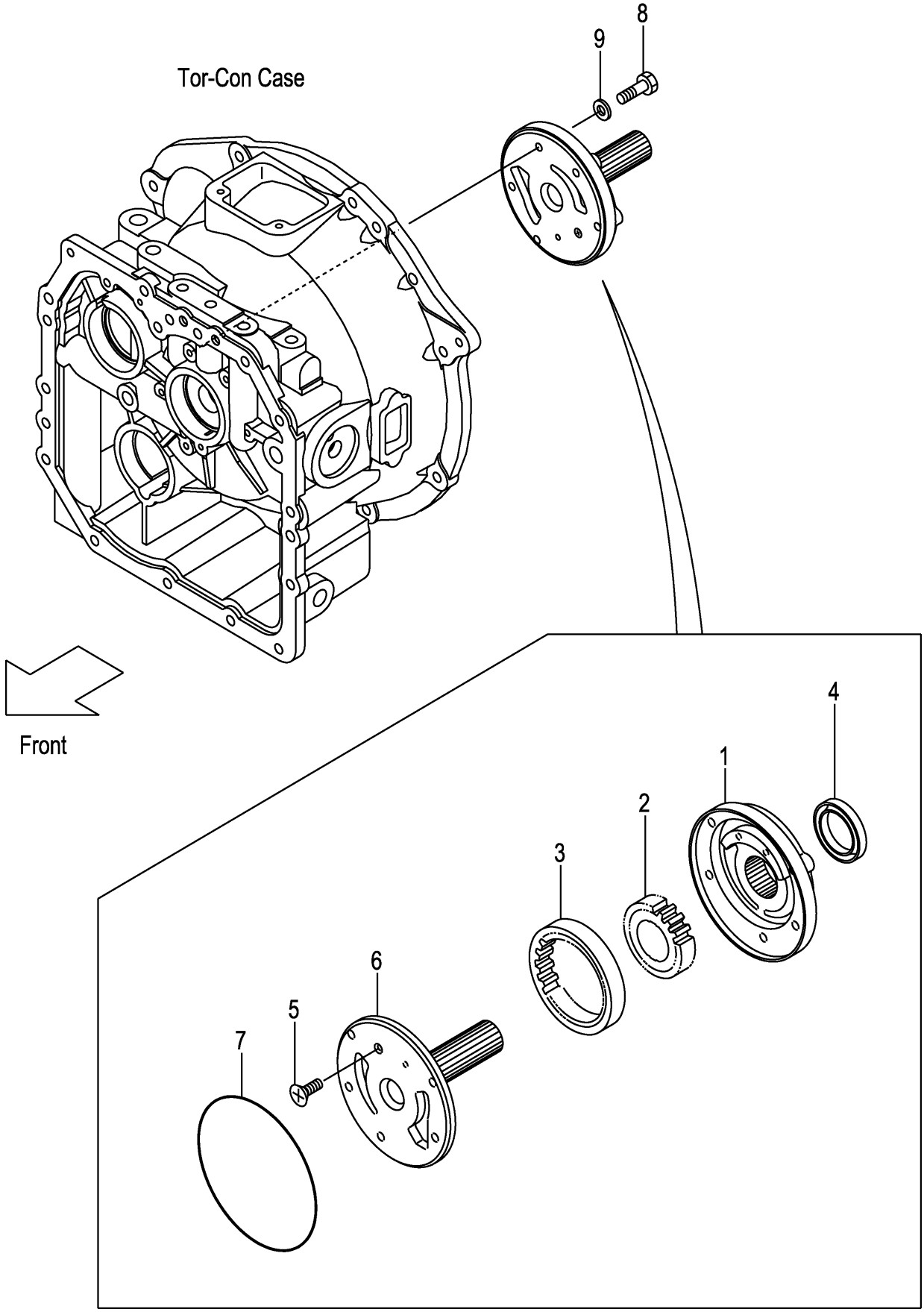

A:FD20T3Z FD25T3Z

Item No	Part No.	Mark	Description		Req'd	Remarks : Serial No.
A1	12N53-80321		PUMP-ASSY,CHARGING		1	INC.1-7
				ﾁｬｰｼﾞﾝｸﾞﾎﾟﾝﾌﾟｱｯｾﾝ		
1	NO PART NO.	#	CASE,PUMP	ｹｰｽ	1	
2	NO PART NO.	#	GEAR,DRIVE	ｷﾞﾔｰ	1	
3	NO PART NO.	#	GEAR,DRIVEN	ｷﾞﾔｰ	1	
4	BK-8104209010		SEAL,OIL	ｼｰﾙ	1	
5	BK-8059061000		SCREW	ｽｸﾘｭ	1	
6	BK-7341006000		SUPPORT,STARTER	ｻﾎﾟｰﾄ	1	
7	BK-81431A4700		O-RING	Oﾘﾝｸﾞ	1	
8	12N53-82641		BOLT,FLANGE	ﾎﾞﾙﾄ	5	
9	12163-82561		PACKING	ﾊﾟｯｷﾝｸﾞ	5	

FIG.61 MISSION CASE (TOR-CON)

(F7Z225A0) ミッションケース

KIT
K1 901

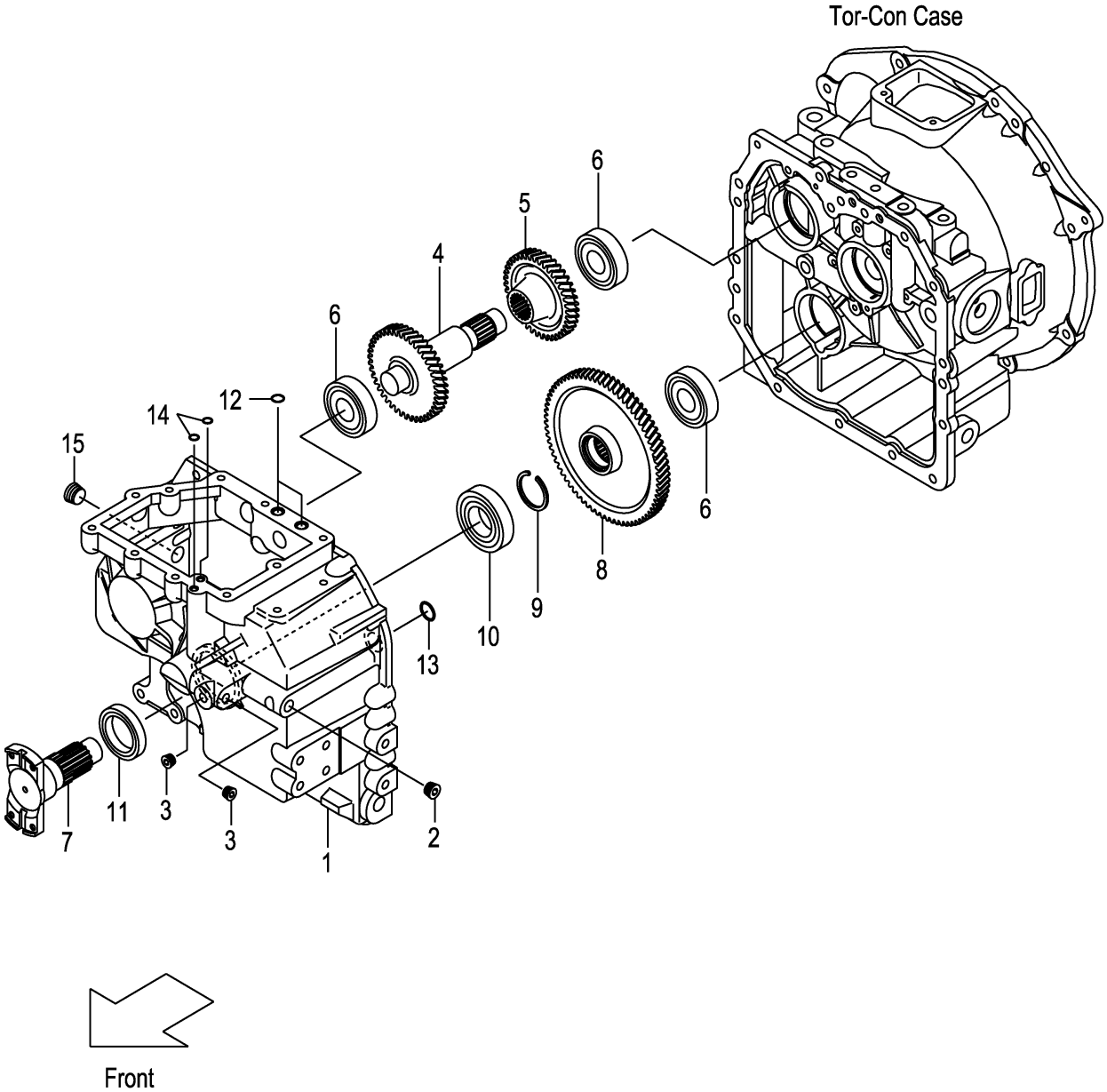

FIG.61

(F7Z225A0)

A:FD20T3Z FD25T3Z

Item No	Part No.	Mark	Description		Req'd	Remarks : Serial No.
901	12N53-89801	K1	KIT,REPAIR,T/M	ﾘﾍﾟｱｷｯﾄ	1	INC.9,11-14,FIG.59:10,13,18
1	12N53-82091		CASE,T/M	ｹｰｽ	1	
2	24329-45541		PLUG	ﾌﾟﾗｸﾞ	1	
3	116H3-82101		PLUG	ﾌﾟﾗｸﾞ	2	
4	12N53-82151		SHAFT,IDLER	ｼｬﾌﾄ	1	
5	12N53-82161		SHAFT,GEAR	ｼｬﾌﾄ	1	
6	03000-06306		BEARING,BALL	ﾍﾞｱﾘﾝｸﾞ	3	
7	12N53-82201		FLANGE,T/M-OUTPUT	ﾌﾗﾝｼﾞ	1	
8	12N53-82171		GEAR,OUTPUT	ｷﾞﾔｰ	1	
9	02120-00040	*	RING,SNAP	ｽﾅｯﾌﾟﾘﾝｸﾞ	1	
10	03000-06208		BEARING,BALL	ﾍﾞｱﾘﾝｸﾞ	1	
11	12N53-82211	*	SEAL,OIL	ｼｰﾙ	1	
12	15583-82521	*	O-RING	Oﾘﾝｸﾞ	2	
13	15583-82101	*	O-RING	Oﾘﾝｸﾞ	1	
14	15583-82571	*	O-RING	Oﾘﾝｸﾞ	2	
15	12163-82541		PLUG	ﾌﾟﾗｸﾞ	1	

FIG.62 CLUTCH PACK (TOR-CON)

(F7Z225B0) クラッチパック

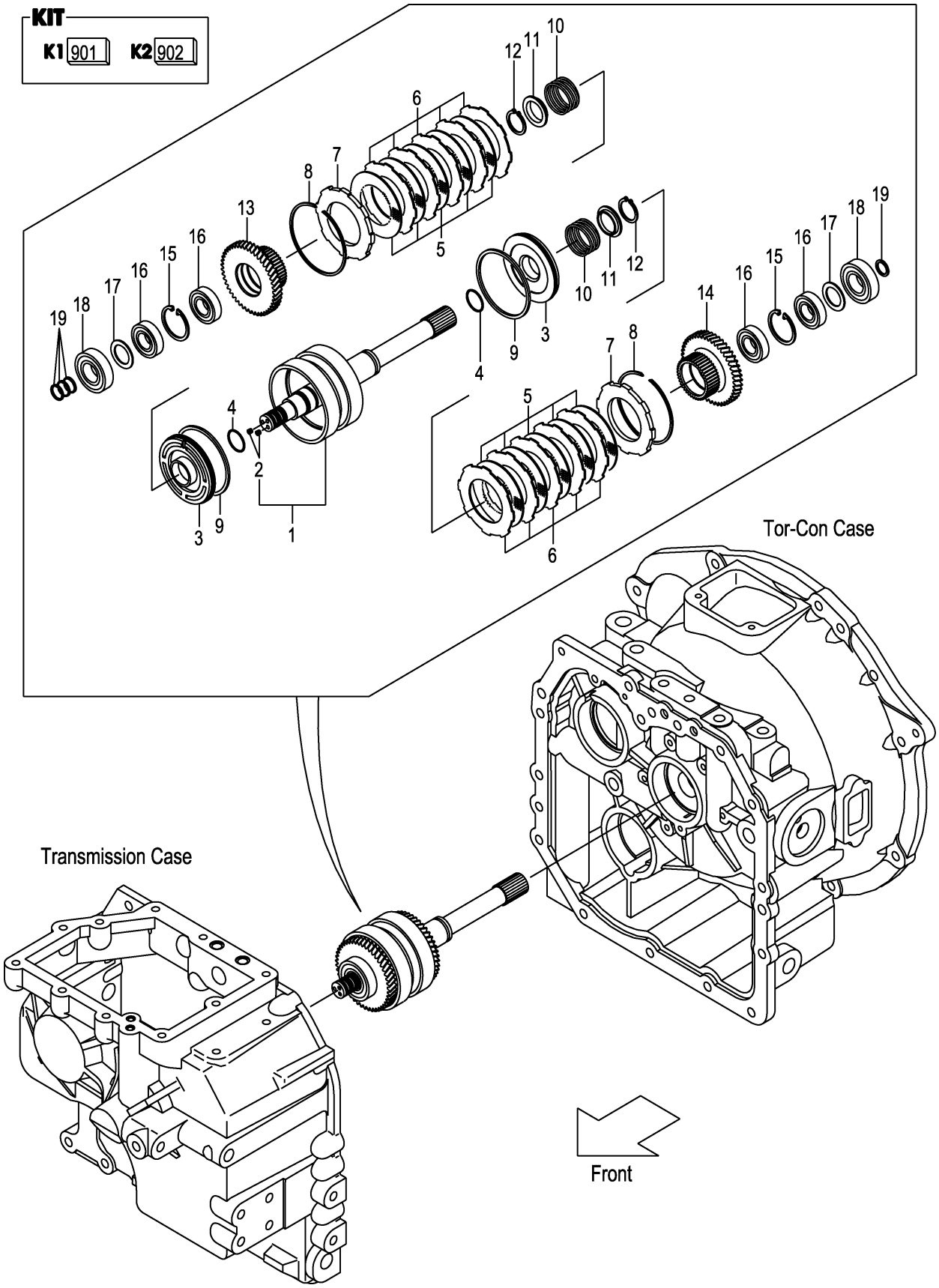

A:FD20T3Z FD25T3Z

Item No	Part No.	Mark	Description		Req'd	Remarks : Serial No.
A1	12N53-80201		CLUTCH-ASSY,HYDRAU	ﾊｲﾄﾞﾛｸﾗｯﾁｱｯｾﾝ	1	INC.1-19
901	134G3-89811	K1	KIT,REPAIR,CLUTCH	ﾘﾍﾟｱｷｯﾄ	1	INC.4,8,9,11,12,19
902	134G3-89831	K2	KIT,REPAIR,DISK	ﾘﾍﾟｱｷｯﾄ	1	INC.5,6
1	12N53-82131		SHAFT,INPUT	ｼｬﾌﾄ	1	INC.2
2	01066-08008		PLUG	ﾌﾟﾗｸﾞ	2	
3	134G3-82111		PISTON	ﾋﾟｽﾄﾝ	2	
4	11243-82211	*	O-RING	Oﾘﾝｸﾞ	2	
5	134B3-82401	*	PLATE,FRICTION	ﾌﾟﾚｰﾄ	10	
6	134G3-82121	*	PLATE,MATING	ﾌﾟﾚｰﾄ	10	
7	134G3-82131		END,CLUTCH	ｴﾝﾄﾞ	2	
8	11243-82181	*	RING,SNAP	ｽﾅｯﾌﾟﾘﾝｸﾞ	2	
9	134G3-82141	*	RING,SEAL	ﾘﾝｸﾞ	2	
10	11243-82081		SPRING,RETURN,CLUTCH	ｽﾌﾟﾘﾝｸﾞ	2	
11	11243-82091	*	SHEET,SPRING	ｼｰﾄ	2	
12	02100-00040	*	RING,SNAP	ｽﾅｯﾌﾟﾘﾝｸﾞ	2	
13	12N53-82101		GEAR,FORWARD	ｷﾞﾔｰ	1	
14	12N53-82111		GEAR,REVERSE	ｷﾞﾔｰ	1	
15	02121-00058		RING,SNAP	ｽﾅｯﾌﾟﾘﾝｸﾞ	2	
16	115G3-82351		BEARING,BALL	ﾍﾞｱﾘﾝｸﾞ	4	
17	115G3-82361		PLATE,THRUST	ﾌﾟﾚｰﾄ	2	
18	03000-06306		BEARING,BALL	ﾍﾞｱﾘﾝｸﾞ	2	
19	11243-82161	*	RING,SEAL	ﾘﾝｸﾞ	4	

FIG.63 CONTROL VALVE (TOR-CON)

(F7Z225C0) コントロールバルブ

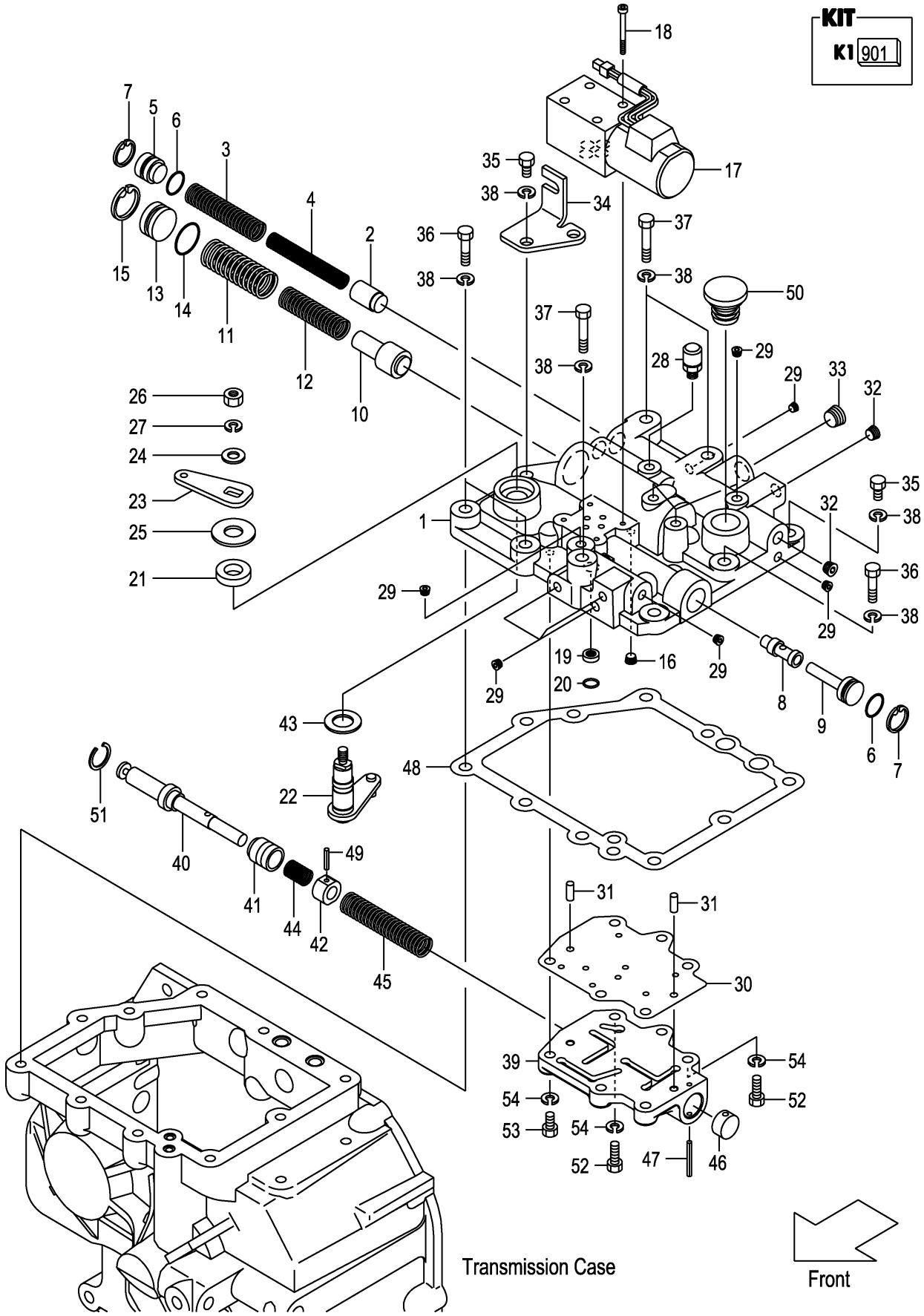

A:FD20T3Z FD25T3Z

Item No	Part No.	Mark	Description		Req'd	Remarks : Serial No.
A1	12N53-80341		VALVE-ASSY,CONTROL	ｺﾝﾄﾛｰﾙﾊﾞﾙﾌﾞｱｯｾﾝ	1	INC.1-51
901	12N53-89831	K1	KIT,REPAIR,VALVE	ﾘﾍﾟｱｷｯﾄ	1	INC.6,7,14,15,21,25,30,43, 47,48,51
1	12N53-82221		COVER,CASE	ｶﾊﾞｰ	1	
2	12N53-82291		PISTON,MAIN-RELIEF	ﾋﾟｽﾄﾝ	1	
3	15583-82411		SPRING	ｽﾌﾟﾘﾝｸﾞ	1	
4	15583-82421		SPRING	ｽﾌﾟﾘﾝｸﾞ	1	
5	12N53-82371		PLUG,MAIN-RELIEF	ﾌﾟﾗｸﾞ	1	
6	118H3-82231	*	O-RING	Oﾘﾝｸﾞ	2	
7	02110-00022	*	RING,SNAP	ｽﾅｯﾌﾟﾘﾝｸﾞ	2	
8	139B3-82121		SPOOL	ｽﾌﾟｰﾙ	1	
9	12N53-82351		PLUG,FR-PISTON	ﾌﾟﾗｸﾞ	1	
10	15583-82441		SPOOL,ACC	ｽﾌﾟｰﾙ	1	
11	15583-82451		SPRING	ｽﾌﾟﾘﾝｸﾞ	1	
12	15583-82461		SPRING	ｽﾌﾟﾘﾝｸﾞ	1	
13	12N53-82361		PLUG,ACC	ﾌﾟﾗｸﾞ	1	
14	12N53-82581	*	O-RING	Oﾘﾝｸﾞ	1	
15	02110-00030	*	RING,SNAP	ｽﾅｯﾌﾟﾘﾝｸﾞ	1	
16	115G3-82671		PLUG,CHOKE	ﾌﾟﾗｸﾞ	1	
17	12N53-82551		VALVE,SOLENOID	ﾊﾞﾙﾌﾞ	1	
18	01170-05045		BOLT	ﾎﾞﾙﾄ	4	
19	12N53-82531		FILTER,COIN	ﾌｨﾙﾀ	1	
20	12N53-82571		O-RING	Oﾘﾝｸﾞ	1	
21	12N53-82251	*	SEAL,OIL	ｼｰﾙ	1	
22	12N53-82421		LINK,INCHING	ﾘﾝｸ	1	
23	12N53-82451		PLATE,INCHING	ﾌﾟﾚｰﾄ	1	
24	23656-42601		WASHER	ﾜｯｼｬ	1	
25	12N53-82781	*	WASHER	ﾜｯｼｬ	1	
26	01400-00008		NUT	ﾅｯﾄ	1	
27	02011-00008		WASHER	ﾜｯｼｬ	1	
28	15573-42151		BREATHER,AIR	ﾌﾞﾘｰｻﾞ	1	
29	116H3-82201		PLUG	ﾌﾟﾗｸﾞ	10	
30	12N53-82721	*	PLATE,SEPARATE	ﾌﾟﾚｰﾄ	1	
31	02212-06016		PIN,PARALLEL	ﾋﾟﾝ	2	
32	116H3-82101		PLUG	ﾌﾟﾗｸﾞ	2	
33	24329-45541		PLUG	ﾌﾟﾗｸﾞ	1	
34	12N53-82741		BRACKET,LINK	ﾌﾞﾗｹｯﾄ	1	
35	01103-10030		BOLT	ﾎﾞﾙﾄ	4	
-	01103-10030		BOLT	ﾎﾞﾙﾄ	2	[TPM]
36	01103-10040		BOLT	ﾎﾞﾙﾄ	3	
37	01103-10060		BOLT	ﾎﾞﾙﾄ	3	
38	02011-00010		WASHER	ﾜｯｼｬ	10	
39	12N53-82231		BODY,VALVE	ﾎﾞﾃﾞｨ	1	
40	12N53-82731		SPOOL,INCHING	ｽﾌﾟｰﾙ	1	
41	12N53-82321		PLUNGER	ﾌﾟﾗﾝｼﾞｬ	1	
42	12N53-82331		PISTON	ﾋﾟｽﾄﾝ	1	
43	12N53-82771	*	WASHER	ﾜｯｼｬ	1	
44	12N53-82501		SPRING	ｽﾌﾟﾘﾝｸﾞ	1	
45	12N53-82481		SPRING	ｽﾌﾟﾘﾝｸﾞ	1	
46	12N53-82401		PLUG	ﾌﾟﾗｸﾞ	1	

FIG.63 CONTROL VALVE (TOR-CON)

(F7Z225C0) コントロールバルブ

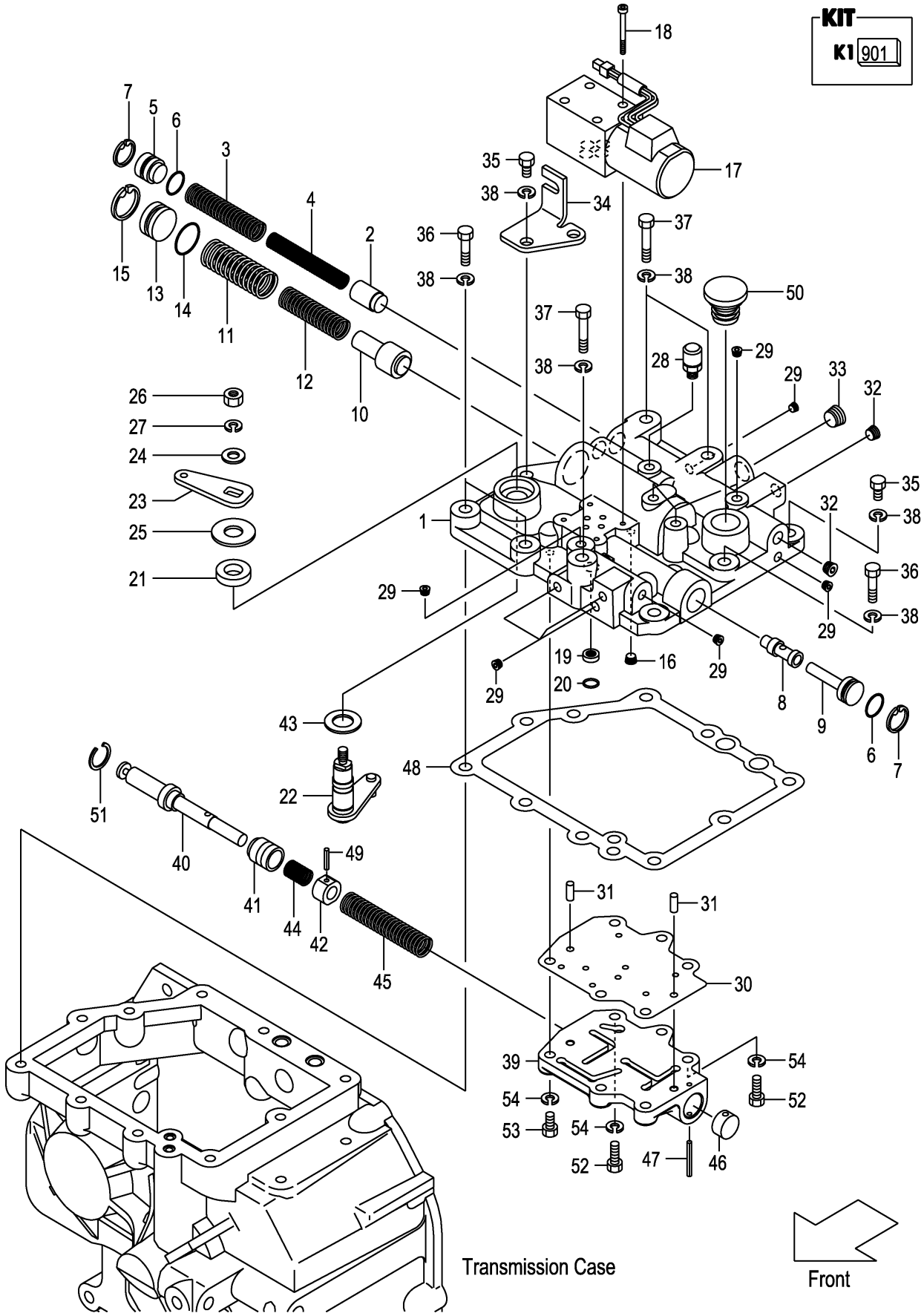

A:FD20T3Z FD25T3Z

Item No	Part No.	Mark	Description		Req'd	Remarks : Serial No.
47	02270-04035	*	PIN,SPRING	ﾋﾟﾝ	1	
48	12N53-82701	*	GASKET,CASE-COVER	ｶﾞｽｹｯﾄ	1	
49	02270-04020		PIN,SPRING	ﾋﾟﾝ	1	
50	12N53-82751		CAP,OIL	ｷｬｯﾌﾟ	1	
51	12N53-82791	*	RING,SNAP	ｽﾅｯﾌﾟﾘﾝｸﾞ	1	
52	01103-08040		BOLT	ﾎﾞﾙﾄ	2	
53	01103-08030		BOLT	ﾎﾞﾙﾄ	4	
54	02011-00008		WASHER	ﾜｯｼｬ	6	

M E M O

M E M O

FIG.64 DRIVE AXLE

(F7Z23010) ﾄﾞﾗｲﾌﾞｱｸｽﾙ

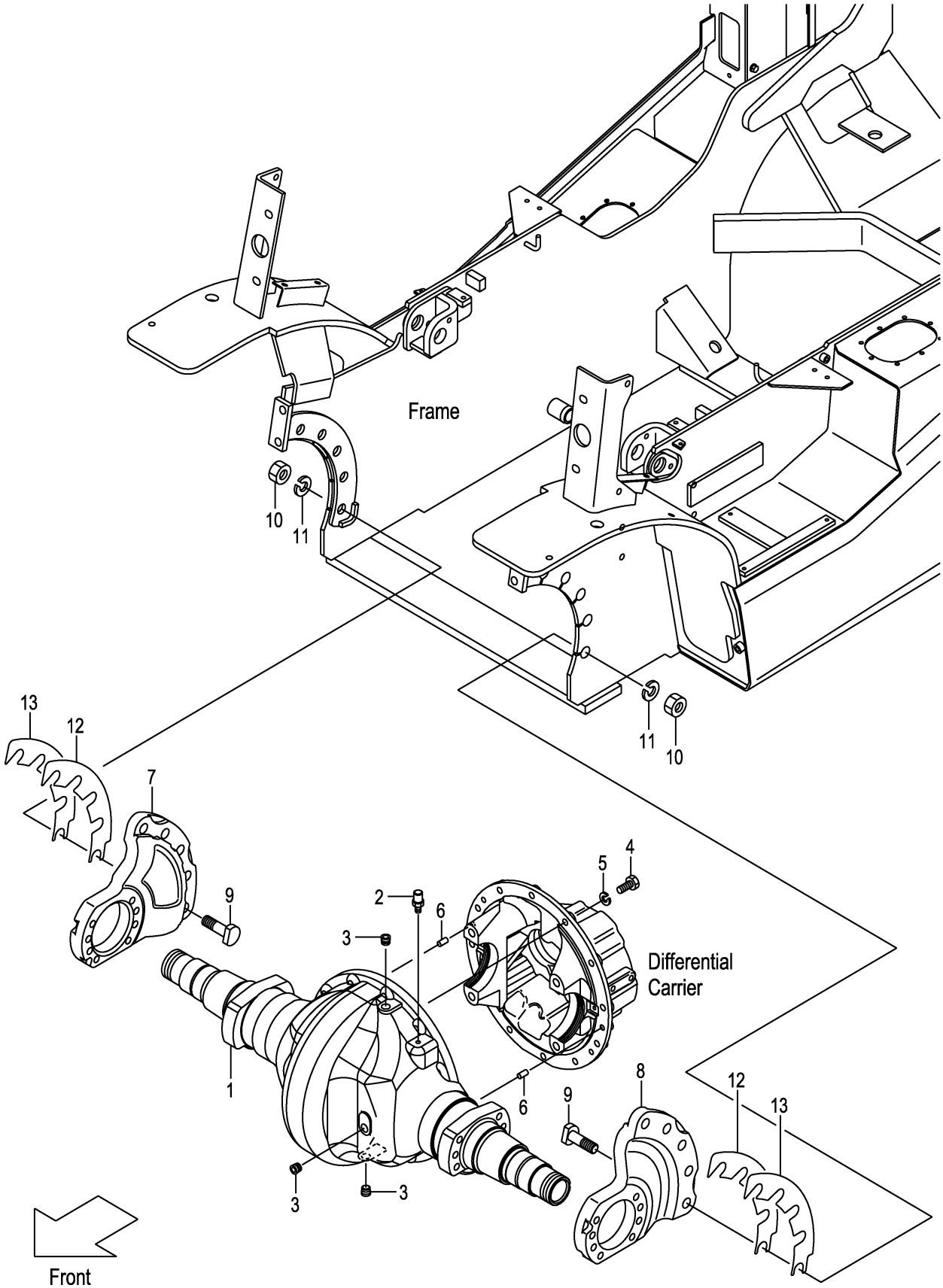

A:FD20C3Z FD20T3Z FD25C3Z FD25T3Z

Item No	Part No.	Mark	Description		Req'd	Remarks : Serial No.
1	22N53-00302		HOUSING,AXLE	ﾊｳｼﾞﾝｸﾞ	1	
2	15573-42151		BREATHER,AIR	ﾌﾞﾘｰｻﾞ	1	
3	22193-03001		PLUG	ﾌﾟﾗｸﾞ	3	
4	01106-12040		BOLT	ﾎﾞﾙﾄ	12	
5	02011-00012		WASHER	ﾜｯｼｬ	12	
6	02212-10020		PIN,PARALLEL	ﾋﾟﾝ	2	
7	22N53-00602		SUPPORT,AXLE,RH	ｻﾎﾟｰﾄ	1	
8	22N53-00612		SUPPORT,AXLE,LH	ｻﾎﾟｰﾄ	1	
9	22N53-02151		BOLT	ﾎﾞﾙﾄ	10	
10	01400-10020		NUT	ﾅｯﾄ	10	
11	02010-00020		WASHER	ﾜｯｼｬ	10	
12	22N53-02601		SHIM,SUPPORT,T-0.5	ｼﾑ	2	110-
13	22N53-02611		SHIM,SUPPORT,T-1.0	ｼﾑ	2	110-

FIG.65 DRUM HUB

(F7Z23020) ﾄﾞﾗﾑﾊﾌﾞ

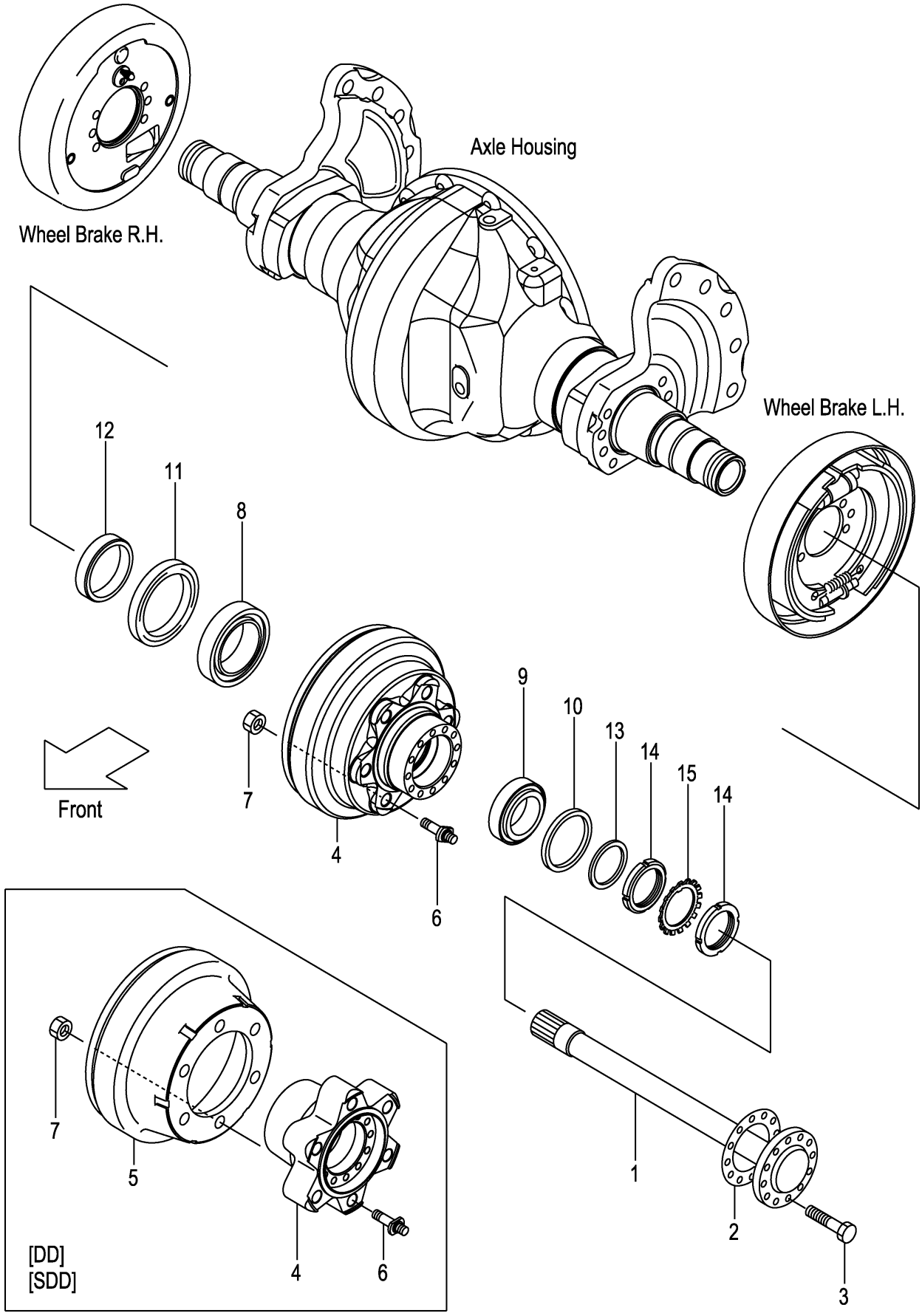

A:FD20C3Z FD20T3Z FD25C3Z FD25T3Z

Item No	Part No.	Mark	Description		Req'd	Remarks : Serial No.
1	214A3-02011		SHAFT,DRIVE	ｼｬﾌﾄ	2	
2	24453-02102		PACKING	ﾊﾟｯｷﾝｸﾞ	2	
3	24453-02061		BOLT,REAMER	ﾎﾞﾙﾄ	24	
4	22N53-02001		HUB & DRUM	ﾊﾌﾞ&ﾄﾞﾗﾑ	2	
-	52N57-42101		HUB,FRONT	ﾊﾌﾞ	2	[DD][SDD]
5	53657-42081		DRUM,BRAKE	ﾄﾞﾗﾑ	2	[DD][SDD]
6	24353-72001		BOLT,HUB	ﾎﾞﾙﾄ	12	
-	53657-42091		BOLT,HUB	ﾎﾞﾙﾄ	12	[DD][SDD]
7	01400-10020		NUT	ﾅｯﾄ	12	
8	03071-30214		BEARING,TAPER-ROLLER	ﾍﾞｱﾘﾝｸﾞ	2	
9	23453-02071		BEARING,TAPER-ROLLER	ﾍﾞｱﾘﾝｸﾞ	2	INC.10
10	23453-02131		SEAL,OIL	ｼｰﾙ	2	
11	03211-09501		SEAL,OIL	ｼｰﾙ	2	
12	22N53-02071		RETAINER,OIL-SEAL	ﾘﾃｰﾅ	2	
13	23453-02091		WASHER	ﾜｯｼｬ	2	
14	03192-00012		NUT,BEARING	ﾅｯﾄ	4	
15	03192-10012		WASHER,BEARING	ﾜｯｼｬ	2	

FIG.66 PROPELLER SHAFT

(F7Z23310) ﾌﾟﾛﾍﾟﾗｼｬﾌﾄ

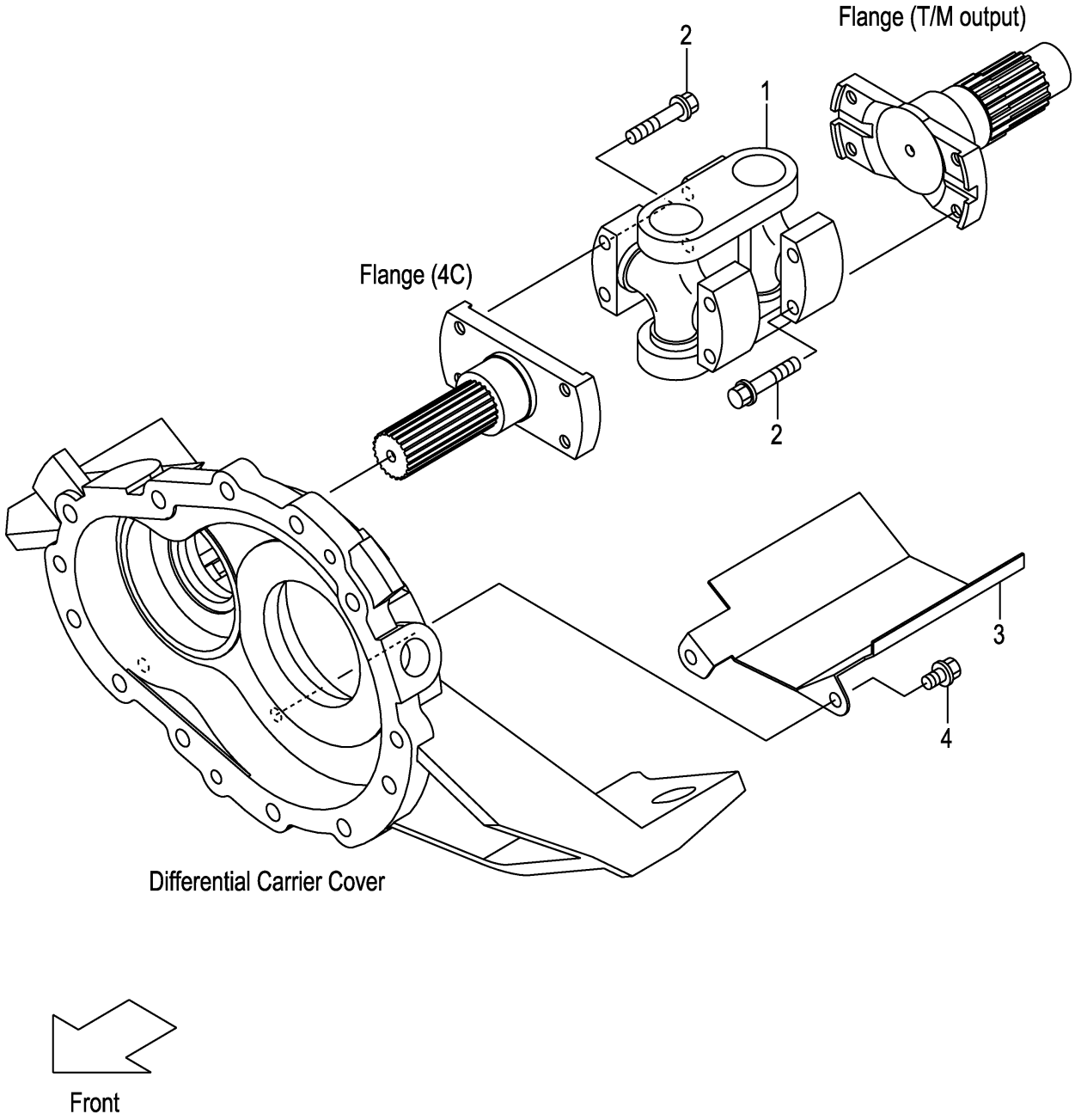

A:FD20C3Z FD20T3Z FD25C3Z FD25T3Z

Item No	Part No.	Mark	Description	Req'd	Remarks : Serial No.
1	12N53-32001		SHAFT,PROPELLER ｼｬﾌﾄ	1	
2	12N53-82641		BOLT,FLANGE ﾎﾞﾙﾄ	8	
3	12N53-32011		COVER,PROPEL-SHAFT ｶﾊﾞｰ	1	
4	12N53-82621		BOLT,FLANGE ﾎﾞﾙﾄ	2	

FIG.67 REDUCTION & DIFFERENTIAL

(F7Z23510) ﾘﾀﾞｸｼｮﾝ&ﾃﾞｨﾌｧﾚﾝｼｬﾙ

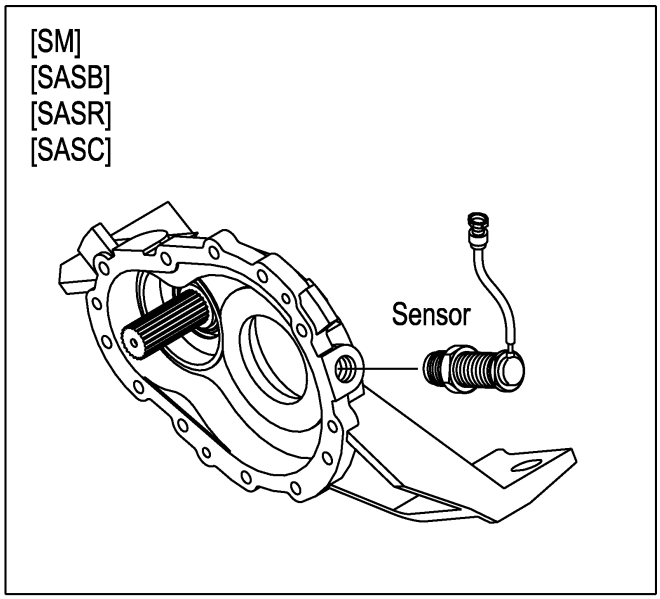

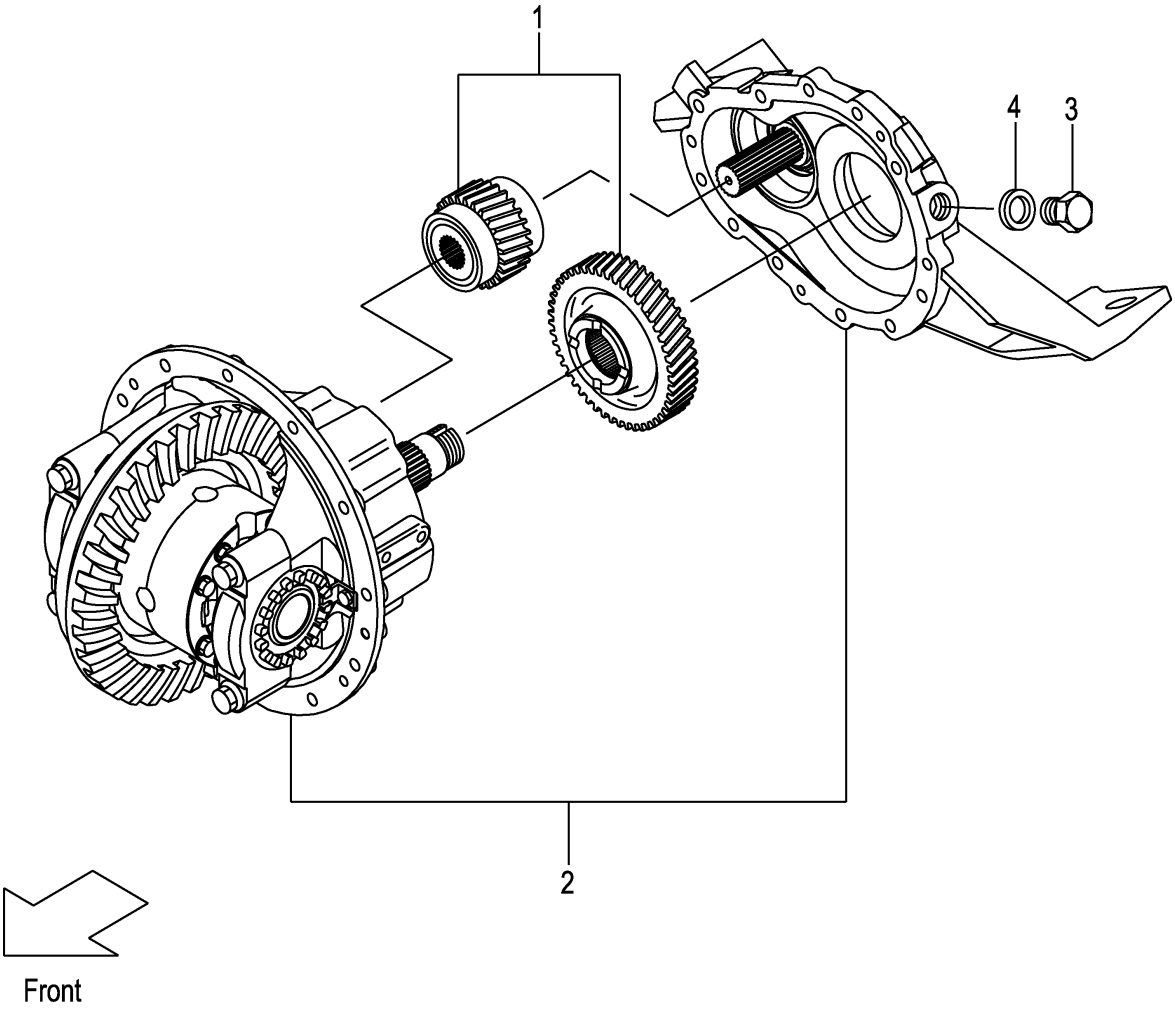

A:FD20C3Z FD20T3Z FD25C3Z FD25T3Z

Item No	Part No.	Mark	Description		Req'd	Remarks : Serial No.
A1	12N53-50201		DIFFERENTIAL-ASSY	ﾃﾞﾌｧﾚﾝｼｬﾙｱｯｾﾝ	1	INC.1,2
-	12N53-50231		DIFFERENTIAL-ASSY	ﾃﾞﾌｧﾚﾝｼｬﾙｱｯｾﾝ	1	[DNS] INC.1,2
1	NO PART NO.		REDUCTION	ﾘﾀﾞｸｼｮﾝ	1	SEE FIG.68
2	NO PART NO.		DIFFERENTIAL	ﾃﾞﾌｧﾚﾝｼｬﾙ	1	SEE FIG.69
-	NO PART NO.		DIFFERENTIAL	ﾃﾞﾌｧﾚﾝｼｬﾙ	1	[DNS]SEE FIG.69
3	124T3-42651		BOLT	ﾎﾞﾙﾄ	1	(WITHOUT SM,SASB,SASR,SASC)
4	124T3-42661		PACKING	ﾊﾟｯｷﾝｸﾞ	1	(WITHOUT SM,SASB,SASR,SASC)

FIG.68 REDUCTION

(F7Z23520) ﾘﾀﾞｸｼｮﾝ

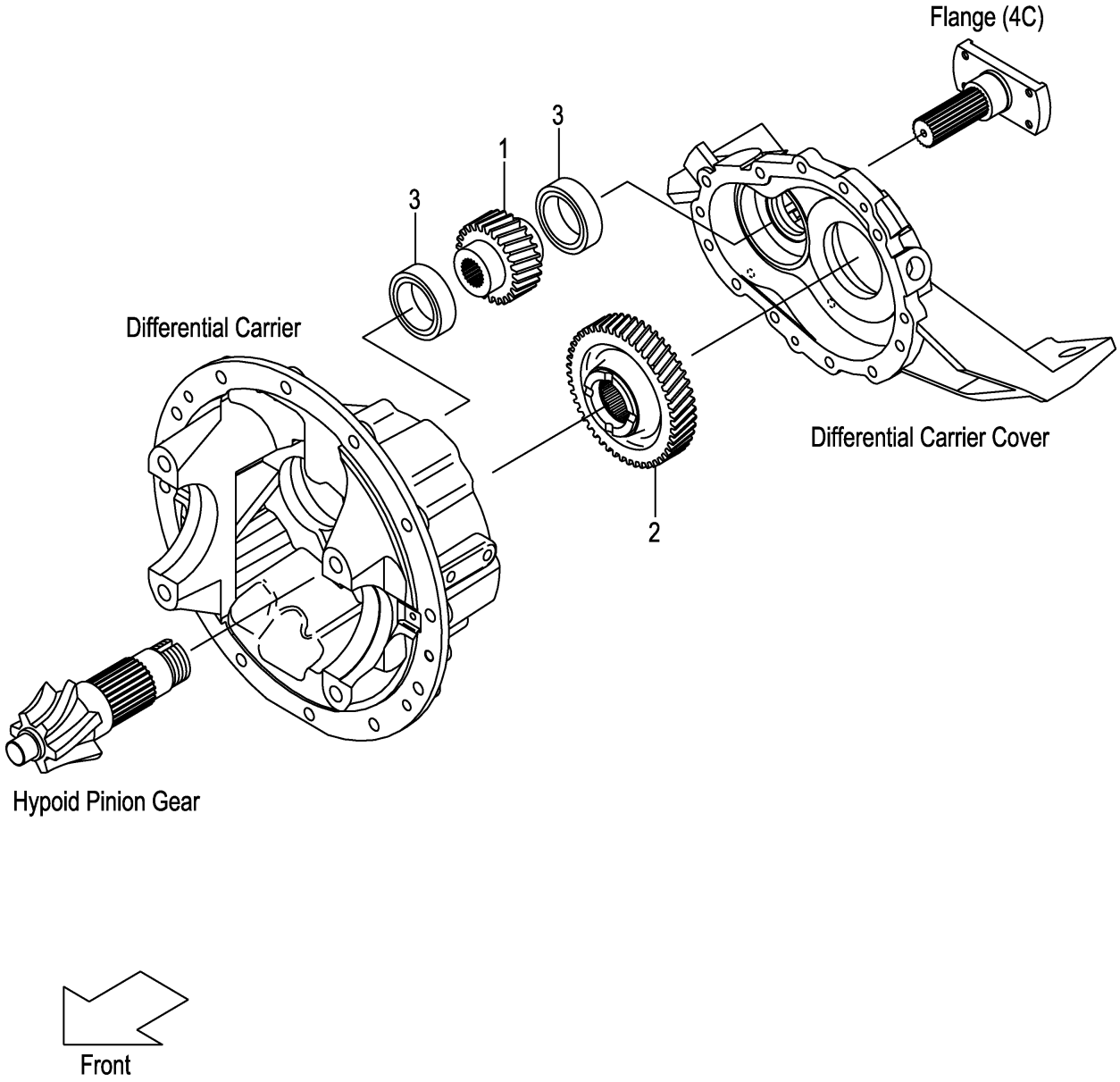

FIG.68

(F7Z23520)

A:FD20C3Z FD20T3Z FD25C3Z FD25T3Z

Item No	Part No.	Mark	Description	Req'd	Remarks : Serial No.
1	12N53-22001		GEAR,REDUCTION ｷﾞﾔｰ	1	
2	12N53-22011		GEAR,REDUCTION ｷﾞﾔｰ	1	
3	03000-06210		BEARING,BALL ﾍﾞｱﾘﾝｸﾞ	2	

FIG.69 DIFFERENTIAL

(F7Z23530) デ゛ィファレンシャル

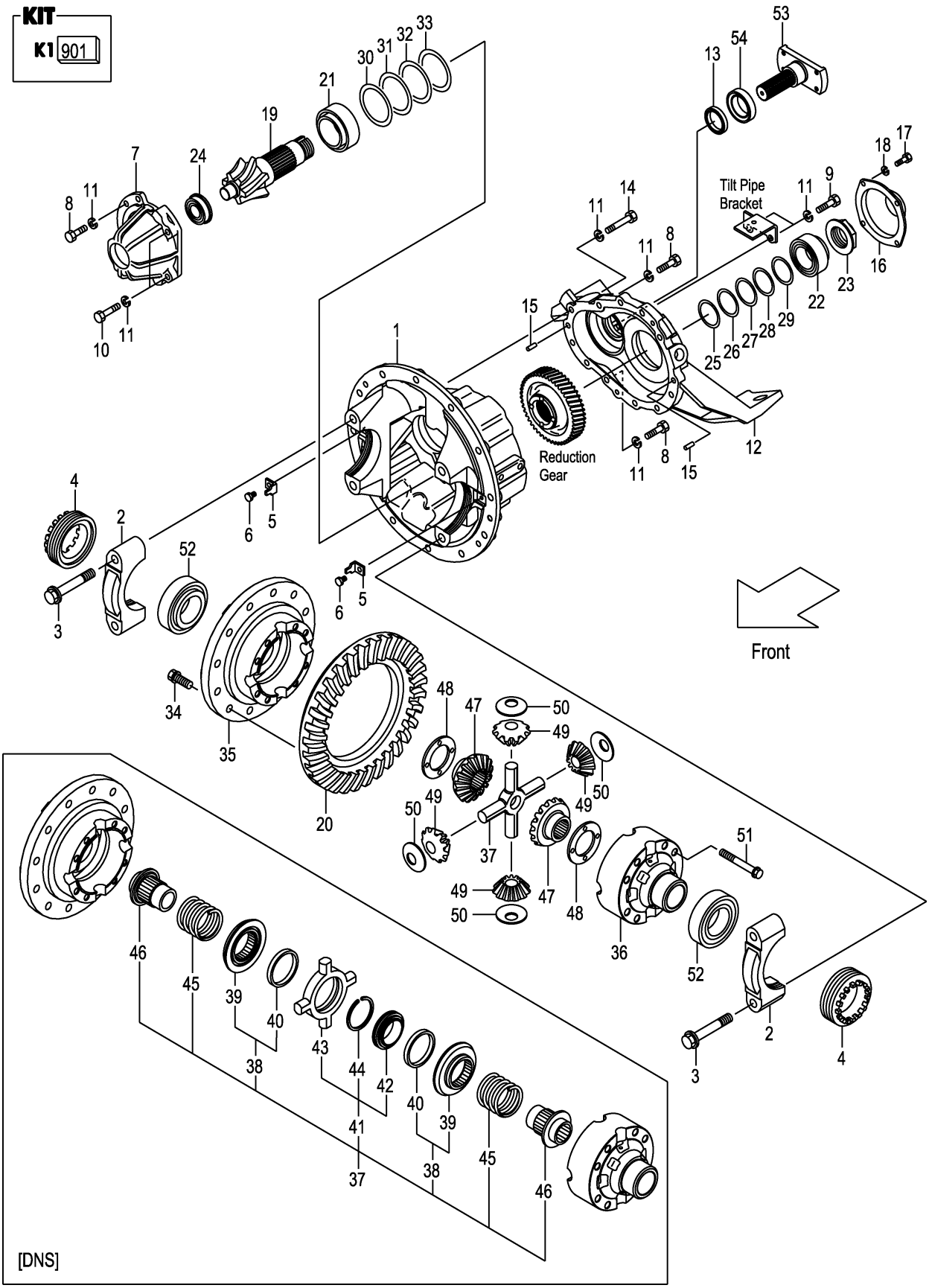

A:FD20C3Z FD20T3Z FD25C3Z FD25T3Z

Item No	Part No.	Mark	Description		Req'd	Remarks : Serial No.
901	12N53-59821	K1	KIT,OVERHAUL,DIFF	ｵｰﾊﾞﾎｰﾙｷｯﾄ	1	INC.5,13,23,25-33,48,50
A1	12N53-50301		CARRIER & CAP-ASSY	ｷｬﾘﾔ&ｷｬｯﾌﾟｱｯｾﾝ	1	INC.1-3
1	NO PART NO.	#	CARRIER,DIFFERENTIAL	ｷｬﾘﾔ	1	
2	NO PART NO.	#	CAP,BEARING	ｷｬｯﾌﾟ	2	
3	12N53-52131		BOLT,REAMER	ﾎﾞﾙﾄ	4	
4	12N53-52081		NUT,ADJUST	ﾅｯﾄ	2	
5	12N53-52141	*	PLATE,LOCK	ﾌﾟﾚｰﾄ	2	
6	12N53-82621		BOLT,FLANGE	ﾎﾞﾙﾄ	2	
7	12N53-52061		SUPPORT,BEARING	ｻﾎﾟｰﾄ	1	
8	01106-10030		BOLT	ﾎﾞﾙﾄ	6	
9	01106-10035		BOLT	ﾎﾞﾙﾄ	2	
10	01106-10045		BOLT	ﾎﾞﾙﾄ	2	
11	02011-00010		WASHER	ﾜｯｼｬ	17	
12	12N53-52031		COVER,DIFF-CARRIER	ｶﾊﾞｰ	1	
13	12N53-52251	*	SEAL,OIL	ｼｰﾙ	1	
14	01106-10060		BOLT	ﾎﾞﾙﾄ	7	
15	02212-10020		PIN,PARALLEL	ﾋﾟﾝ	2	
16	12N53-52111		COVER,PINION	ｶﾊﾞｰ	1	
17	01103-08016		BOLT	ﾎﾞﾙﾄ	4	
18	02011-00008		WASHER	ﾜｯｼｬ	4	
A2	12N53-59801		GEAR-ASSY,HYPOID	ﾊｲﾎﾟｲﾄﾞｷﾞﾔｰｱｯｾﾝ	1	INC.19,20
19	NO PART NO.	#	GEAR,PINION,LH	ｷﾞﾔｰ	1	
20	NO PART NO.	#	GEAR,RING,RH	ｷﾞﾔｰ	1	
21	14603-52131		BEARING,TAPER-ROLLER	ﾍﾞｱﾘﾝｸﾞ	1	
22	12N53-52231		BEARING,TAPER-ROLLER	ﾍﾞｱﾘﾝｸﾞ	1	
23	12N53-52101	*	NUT,PINION	ﾅｯﾄ	1	
24	12N53-52341		BEARING,ROLLER	ﾍﾞｱﾘﾝｸﾞ	1	
25	12N53-52171	*	SHIM,T-0.1	ｼﾑ	1	
26	12N53-52271	*	SHIM,T-0.15	ｼﾑ	1	
27	12N53-52181	*	SHIM,T-0.2	ｼﾑ	2	
28	12N53-52191	*	SHIM,T-0.5	ｼﾑ	1	
29	12N53-52351	*	SHIM,T-0.125	ｼﾑ	1	
30	12N53-52201	*	SHIM,T-0.1	ｼﾑ	1	
31	12N53-52291	*	SHIM,T-0.15	ｼﾑ	1	
32	12N53-52211	*	SHIM,T-0.2	ｼﾑ	2	
33	12N53-52221	*	SHIM,T-0.5	ｼﾑ	1	
34	12N53-52151		BOLT,FLANGE	ﾎﾞﾙﾄ	12	
A3	12N53-59811		CASE-ASSY,CROSS	ｸﾛｽｹｰｽｱｯｾﾝ	1	INC.35,36
35	NO PART NO.	#	CASE,CROSS,RH	ｹｰｽ	1	
36	NO PART NO.	#	CASE,CROSS,LH	ｹｰｽ	1	
37	124G3-52011		SPIDER	ｽﾊﾟｲﾀﾞ	1	
-	12N53-52381		NOSPIN	ﾉｰｽﾋﾟﾝ	1	[DNS] INC.38-46
38	12N53-52431		CLUTCH,DRIVEN	ｸﾗｯﾁ	2	[DNS] INC.39,40
39	12N53-52441		CLUTCH,DRIVEN	ｸﾗｯﾁ	2	[DNS]
40	12N53-52451		RING,HOLDOUT	ﾘﾝｸﾞ	2	[DNS]
41	12N53-52461		SPIDER	ｽﾊﾟｲﾀﾞ	1	[DNS] INC.42-44
42	12N53-52471		CAM,CENTER	ｶﾑ	1	[DNS]
43	12N53-52481		SPIDER	ｽﾊﾟｲﾀﾞ	1	[DNS]
44	12N53-52491		RING,SNAP	ｽﾅｯﾌﾟﾘﾝｸﾞ	1	[DNS]
45	12N53-52501		SPRING	ｽﾌﾟﾘﾝｸﾞ	2	[DNS]

FIG.69 DIFFERENTIAL

(F7Z23530) デ゛ィファレンシャル

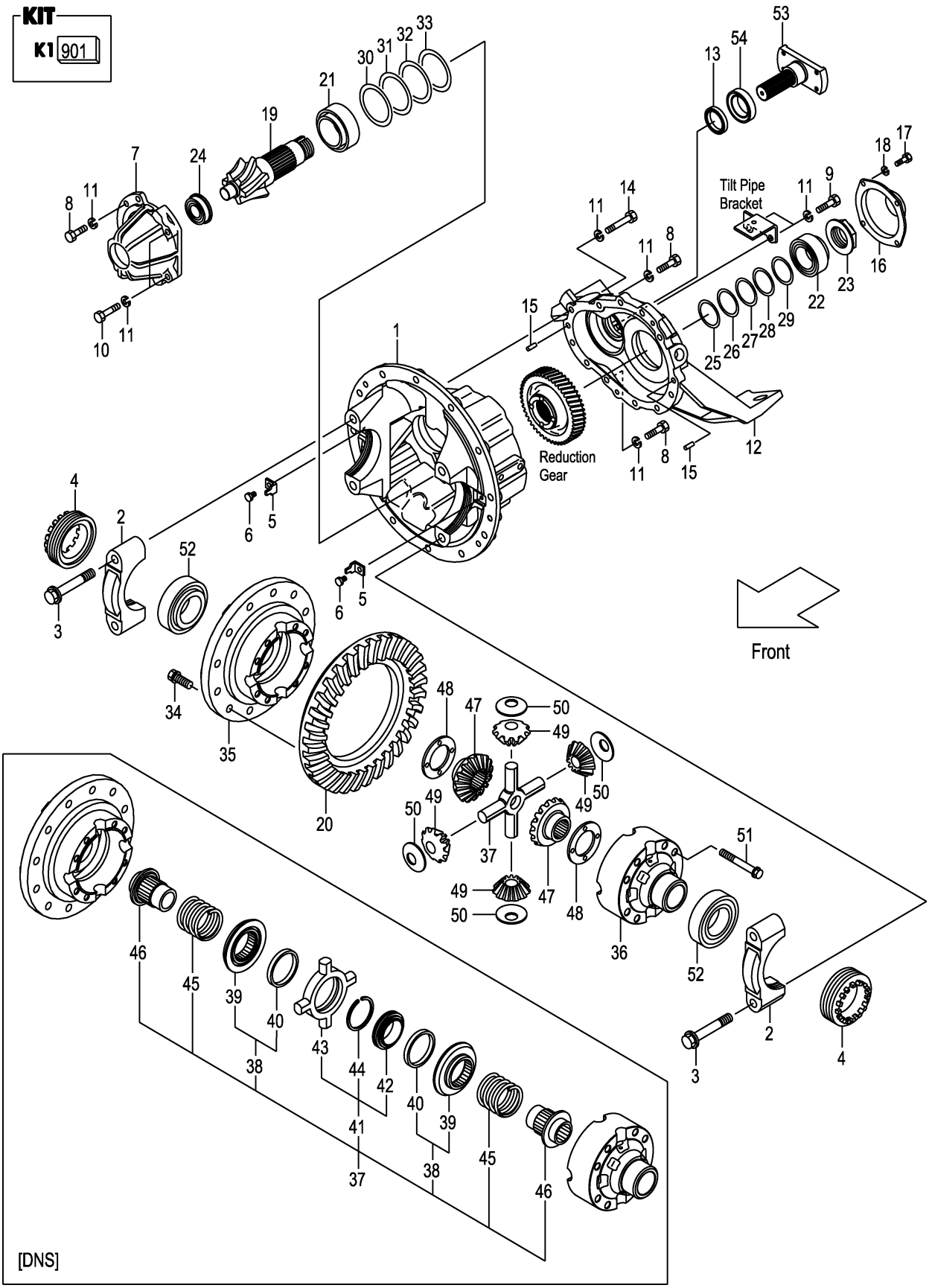

A:FD20C3Z FD20T3Z FD25C3Z FD25T3Z

Item No	Part No.	Mark	Description		Req'd	Remarks : Serial No.
46	12N53-52511		GEAR,SIDE	ｷﾞﾔｰ	2	[DNS]
47	134A3-52041		GEAR,SIDE	ｷﾞﾔｰ	2	(WITHOUT DNS)
48	16113-52141	*	WASHER,THRUST	ﾜｯｼｬ	2	(WITHOUT DNS)
49	134A3-52051		GEAR,PINION	ｷﾞﾔｰ	4	(WITHOUT DNS)
50	16113-52121	*	WASHER,THRUST	ﾜｯｼｬ	4	(WITHOUT DNS)
51	12N53-52161		BOLT,FLANGE	ﾎﾞﾙﾄ	8	
52	12N53-52241		BEARING,TAPER-ROLLER	ﾍﾞｱﾘﾝｸﾞ	2	
53	12N53-52091		FLANGE,4C	ﾌﾗﾝｼﾞ	1	
54	12N53-52121		COVER,DUST	ｶﾊﾞｰ	1	

M E M O

M E M O

FIG.70 WHEEL BRAKE

(F7Z23710) ホイールブレーキ

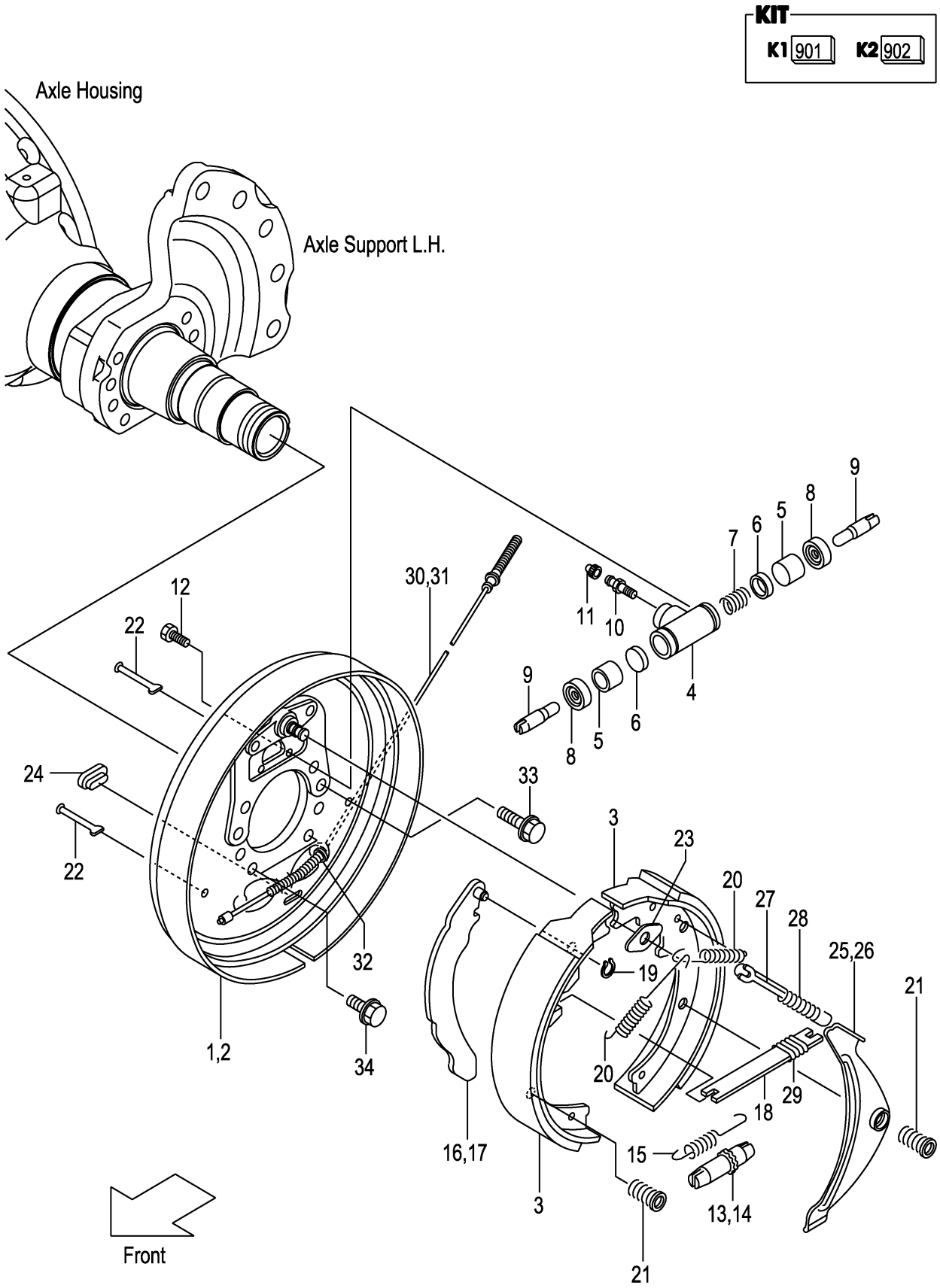

A:FD20C3Z FD20T3Z FD25C3Z FD25T3Z

Item No	Part No.	Mark	Description		Req'd	Remarks : Serial No.
A1	22N53-70101		BRAKE-ASSY,RH	ﾌﾞﾗｹｯﾄｱｯｾﾝ	1	INC.1,3-13,15,16,18-25, 27-30,32
A2	22N53-70201		BRAKE-ASSY,LH	ﾌﾞﾗｹｯﾄｱｯｾﾝ	1	INC.2-12,14,15,17-24,26-29, 31,32
901	522A2-61561	K1	KIT,BRAKE-SHOE	ﾌﾞﾚｰｷｼｭｰｷｯﾄ	2	INC.3
1	234A3-72021		PLATE,BACK,RH	ﾌﾟﾚｰﾄ	1	
2	234A3-72031		PLATE,BACK,LH	ﾌﾟﾚｰﾄ	1	
3	NO PART NO.	#*	SHOE,BRAKE	ｼｭｰ	4	
A3	234A3-72001		CYL-ASSY,WHEEL	ﾎｲｰﾙｼﾘﾝﾀﾞｱｯｾﾝ	2	INC.4-11
902	22673-79801	K2	KIT,OVERHAUL	ｵｰﾊﾞｰﾎｰﾙｷｯﾄ	2	INC.5-8
4	NO PART NO.	#	BODY,WHEEL-CYL	ﾎﾞﾃﾞｨ	2	
5	NO PART NO.	#*	PISTON	ﾋﾟｽﾄﾝ	4	
6	NO PART NO.	#*	CUP,PISTON	ｶｯﾌﾟ	4	
7	NO PART NO.	#*	SPRING	ｽﾌﾟﾘﾝｸﾞ	2	
8	NO PART NO.	#*	COVER,DUST	ｶﾊﾞｰ	4	
9	22673-72111		ROD,PISTON	ﾛｯﾄﾞ	4	
10	22673-72131		SCREW,BLEEDER	ｽｸﾘｭ	2	
11	22673-72141		CAP,BLEEDER-SCREW	ｷｬｯﾌﾟ	2	
12	22673-72161		BOLT	ﾎﾞﾙﾄ	4	
13	23653-72031		ADJUSTER,RH	ｱｼﾞｬｽﾀ	1	
14	23653-72041		ADJUSTER,LH	ｱｼﾞｬｽﾀ	1	
15	23653-72051		SPRING,ADJUSTER	ｽﾌﾟﾘﾝｸﾞ	2	
16	23653-72062		LEVER,BRAKE,RH	ﾚﾊﾞｰ	1	
17	23653-72072		LEVER,BRAKE,LH	ﾚﾊﾞｰ	1	
18	23653-72081		STRUT	ｽﾄﾗｯﾄ	2	
19	22673-72252		RETAINER	ﾘﾃｰﾅ	2	
20	22673-72261		SPRING,SHOE-RETURN	ｽﾌﾟﾘﾝｸﾞ	4	
21	234A3-72101		SPRING,SHOE-HOLD	ｽﾌﾟﾘﾝｸﾞ	8	
22	23653-72101		PIN,SHOE-HOLD	ﾋﾟﾝ	8	
23	23653-72131		PLATE,SHOE-GUIDE	ﾌﾟﾚｰﾄ	2	
24	22673-72321		PLUG,RUBBER	ﾌﾟﾗｸﾞ	2	
25	23653-72142		LEVER,PAWL,RH	ﾚﾊﾞｰ	1	
26	23653-72152		LEVER,PAWL,LH	ﾚﾊﾞｰ	1	
27	23653-72161		STOPPER,PAWL-LEVER	ｽﾄｯﾊﾟ	2	
28	23653-72171		SPRING,ACTUATOR	ｽﾌﾟﾘﾝｸﾞ	2	
29	22673-72391		SPRING,ANTIRATTLE	ｽﾌﾟﾘﾝｸﾞ	2	
30	79244-23319		CABLE,CONTROL,RH	ｹｰﾌﾞﾙ	1	
31	271G3-72001		CABLE,CONTROL,LH	ｹｰﾌﾞﾙ	1	
32	23653-72201		RETAINER	ﾘﾃｰﾅ	2	
33	22N53-02212		BOLT	ﾎﾞﾙﾄ	12	
34	22N53-02201		BOLT	ﾎﾞﾙﾄ	4	

FIG.71 STEERING WHEEL UNIT

(F7Z24110) ステアリング゛ホイールユニット

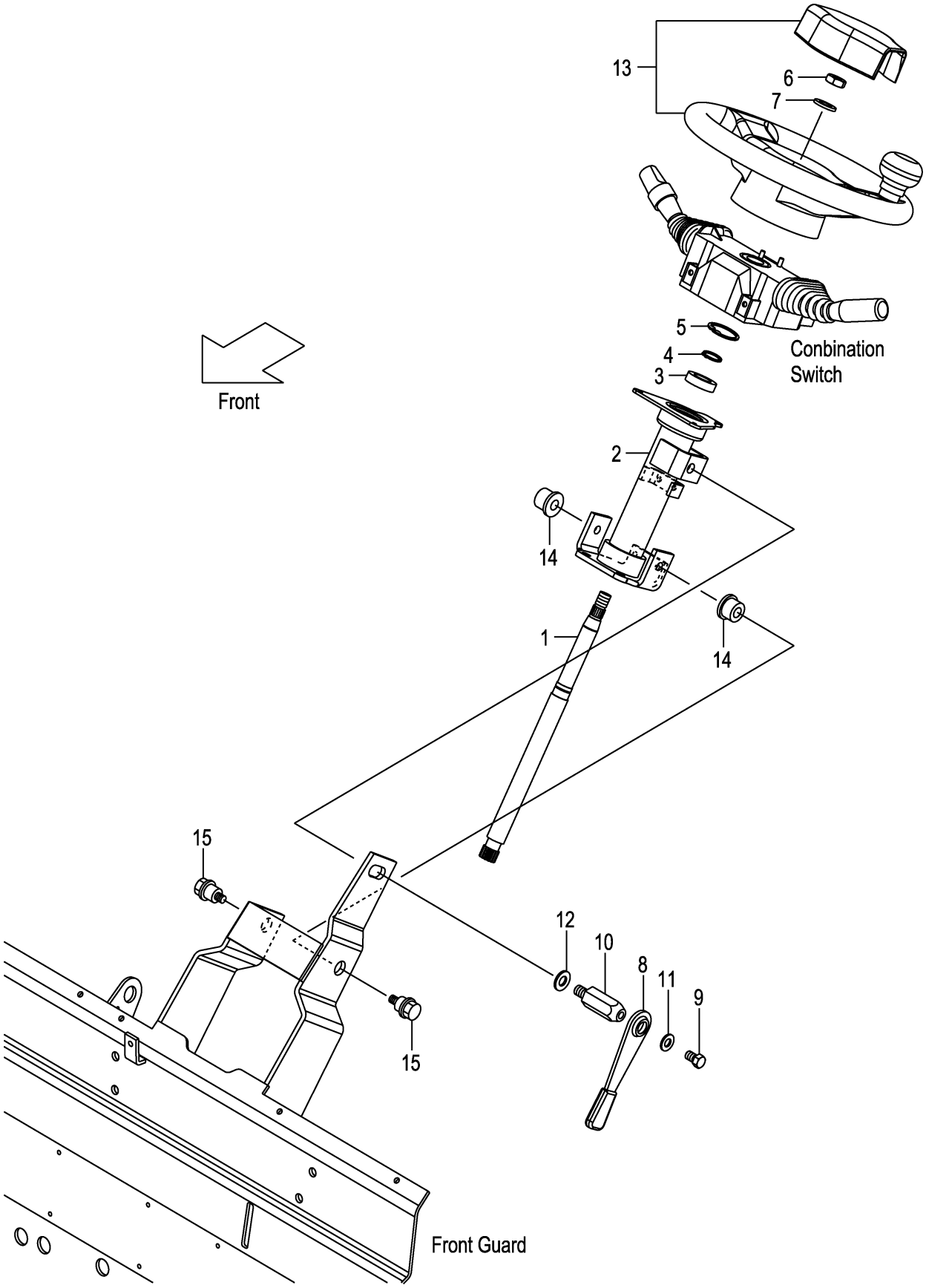

A:FD20C3Z FD20T3Z FD25C3Z FD25T3Z

Item No	Part No.	Mark	Description		Req'd	Remarks : Serial No.
1	22N54-12011		SHAFT,STEERING	ｼｬﾌﾄ	1	
2	22N54-12021		TUBE,STEERING-COLUMN	ﾁｭｰﾌﾞ	1	1-109
-	22N54-12022		TUBE,STEERING-COLUMN	ﾁｭｰﾌﾞ	1	110-
3	03020-06904		BEARING,BALL	ﾍﾞｱﾘﾝｸﾞ	1	
4	02100-00020		RING,SNAP	ｽﾅｯﾌﾟﾘﾝｸﾞ	1	
5	02110-00037		RING,SNAP	ｽﾅｯﾌﾟﾘﾝｸﾞ	1	
6	01402-10014		NUT	ﾅｯﾄ	1	
7	02000-00014		WASHER	ﾜｯｼｬ	1	
A1	239A4-12402		LEVER-ASSY,TILT-LOCK	ﾃｨﾙﾄﾛｯｸﾚﾊﾞｰｱｯｾﾝ	1	INC.8-11
8	239A4-12411		LEVER	ﾚﾊﾞｰ	1	
9	239A4-12441		BOLT	ﾎﾞﾙﾄ	1	
10	239A4-12431		BOLT,LOCK	ﾎﾞﾙﾄ	1	
11	214A4-12161		WASHER	ﾜｯｼｬ	1	
12	02000-00012		WASHER	ﾜｯｼｬ	1	
13	22N54-10201		WHEEL,STEERING	ﾎｲｰﾙ	1	
14	216G4-12101		BUSHING	ﾌﾞｯｼﾝｸﾞ	2	
15	216G4-12111		BOLT	ﾎﾞﾙﾄ	2	

FIG.72 ORBITROL
(F7Z24120) **オービットロール**

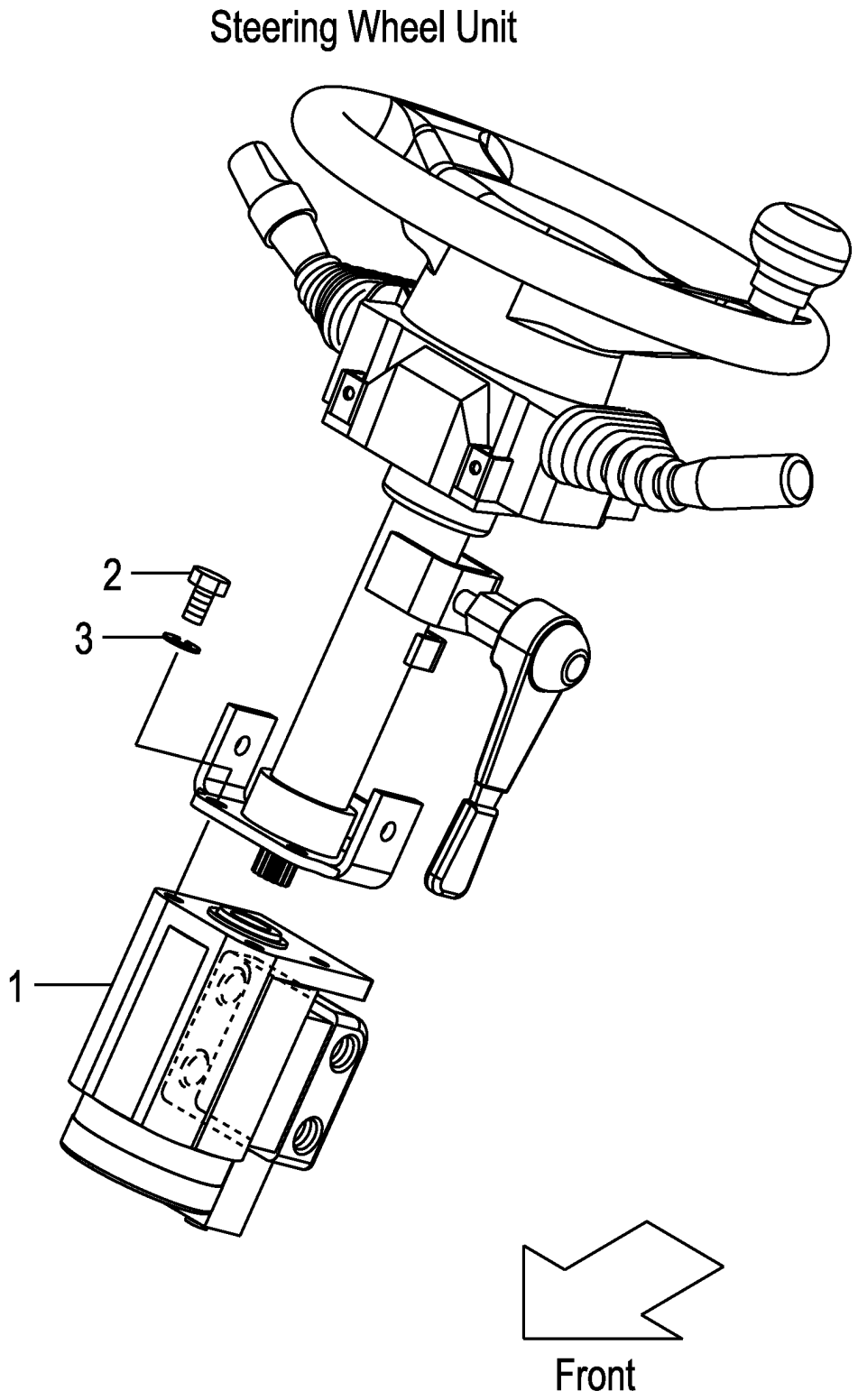

FIG.72

(F7Z24120)

A:FD20C3Z FD20T3Z FD25C3Z FD25T3Z

Item No	Part No.	Mark	Description		Req'd	Remarks : Serial No.
1	22N54-10301		UNIT,ORBITROL	ﾕﾆｯﾄ	1	
-	22N54-10311		UNIT,ORBITROL	ﾕﾆｯﾄ	1	[VSL]
2	01110-10025		BOLT	ﾎﾞﾙﾄ	4	1-109
-	01113-10035		BOLT	ﾎﾞﾙﾄ	4	110-
3	02011-00010		WASHER	ﾜｯｼｬ	4	

FIG.73 ORBITROL FITTING

(F7Z24140) オービットロールフィッティング

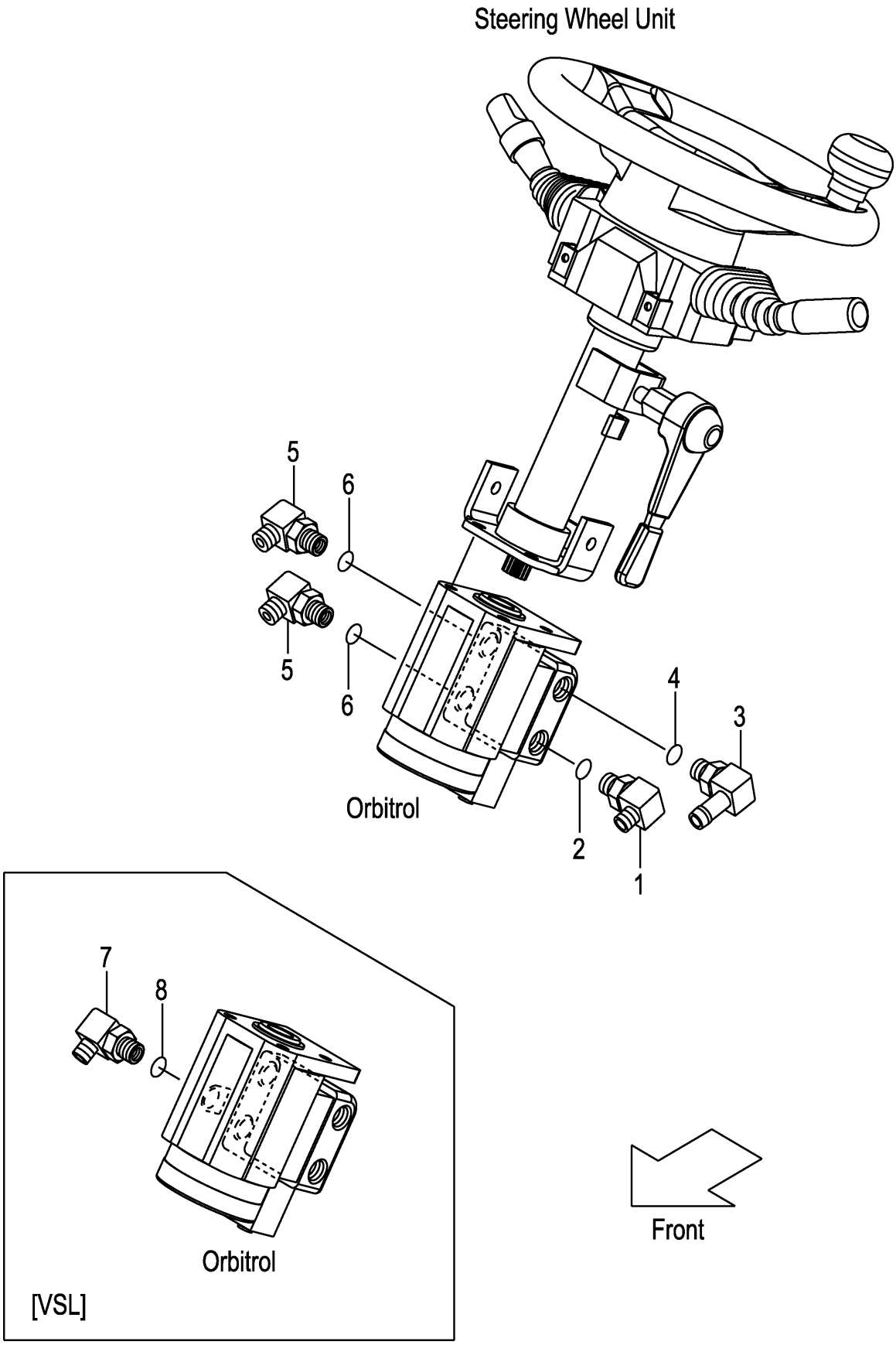

FIG.73

(F7Z24140)

A:FD20C3Z FD20T3Z FD25C3Z FD25T3Z

Item No	Part No.	Mark	Description		Req'd	Remarks : Serial No.
A1	24237-62331		ELBOW-ASSY	ｴﾙﾎﾞｱｯｾﾝ	1	INC.1,2
1	NO PART NO.	#	ELBOW	ｴﾙﾎﾞ	1	
2	03320-00140		O-RING	Oﾘﾝｸﾞ	1	
A2	243C7-80201		FITTING-ASSY,HOSE	ﾎｰｽﾌｨｯﾃｨﾝｸﾞｱｯｾﾝ	1	INC.3,4
3	NO PART NO.	#	FITTING,HOSE	ﾌｨｯﾃｨﾝｸﾞ	1	
4	03320-00140		O-RING	Oﾘﾝｸﾞ	1	
A3	04150-20303		ELBOW-ASSY	ｴﾙﾎﾞｱｯｾﾝ	2	INC.5,6
5	NO PART NO.	#	ELBOW	ｴﾙﾎﾞ	2	
6	03320-00140		O-RING	Oﾘﾝｸﾞ	2	
A4	04150-20202		ELBOW-ASSY	ｴﾙﾎﾞｱｯｾﾝ	1	[VSL] INC.7,8
7	NO PART NO.	#	ELBOW	ｴﾙﾎﾞ	1	[VSL]
8	03320-00110		O-RING	Oﾘﾝｸﾞ	1	[VSL]

FIG.74 STEERING AXLE

(F7Z24310) ステアリング゛アクスル

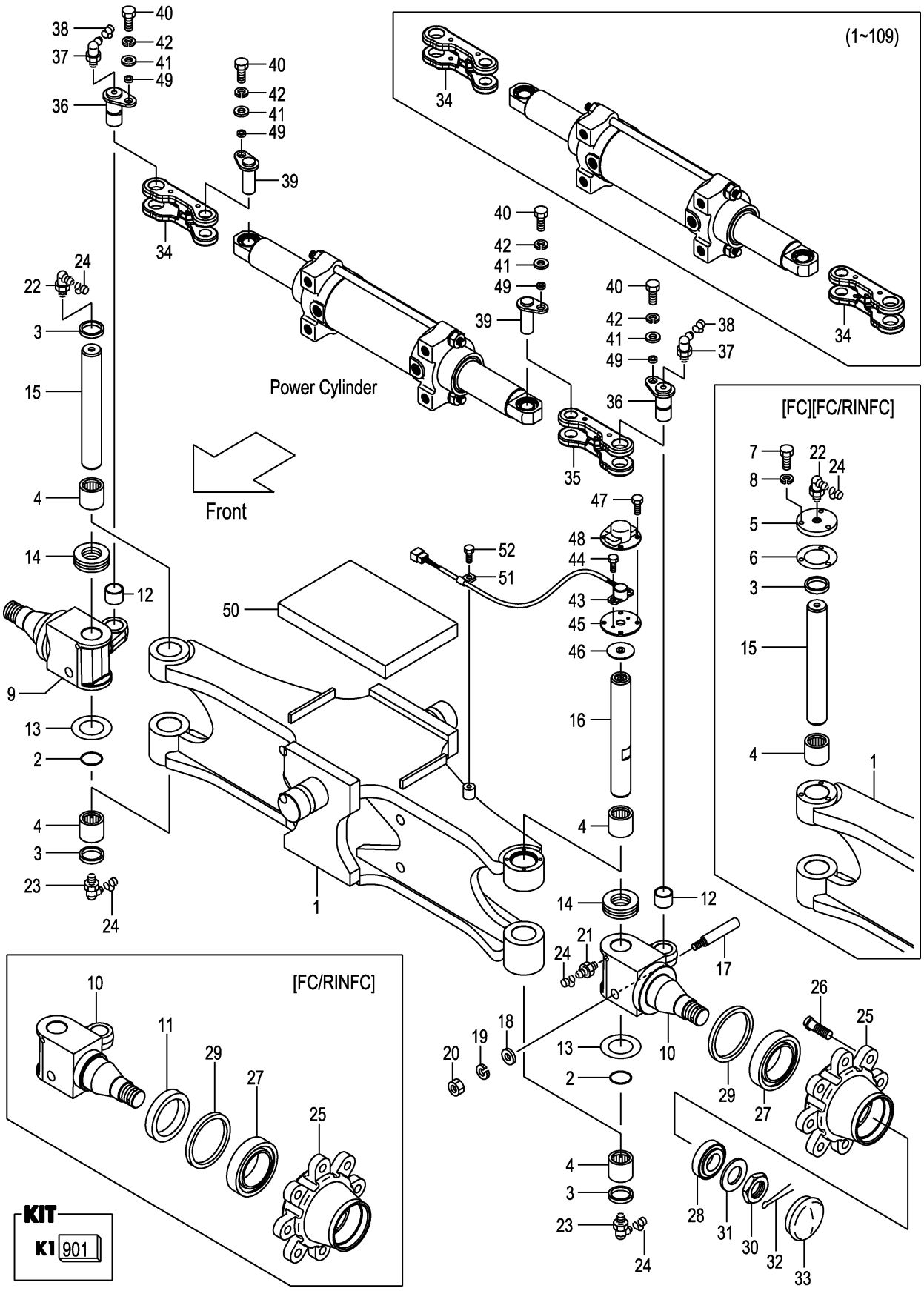

A:FD20C3Z FD20T3Z FD25C3Z FD25T3Z

Item No	Part No.	Mark	Description		Req'd	Remarks : Serial No.
A1	22N54-30101		AXLE-ASSY,STEERING	ｽﾃｱﾘﾝｸﾞｱｸｽﾙｱｯｾﾝ	1	1-109 INC.1-4,9,10,12-33
-	22N54-30102		AXLE-ASSY,STEERING	ｽﾃｱﾘﾝｸﾞｱｸｽﾙｱｯｾﾝ	1	110- INC.1-4,9,10,12-33
-	52N53-70101		AXLE-ASSY,STEERING	ｽﾃｱﾘﾝｸﾞｱｸｽﾙｱｯｾﾝ	1	1-109 [FC] INC.1-10,12-33
-	52N53-70102		AXLE-ASSY,STEERING	ｽﾃｱﾘﾝｸﾞｱｸｽﾙｱｯｾﾝ	1	110- [FC] INC.1-10,12-33
-	52N53-70201		AXLE-ASSY,STEERING	ｽﾃｱﾘﾝｸﾞｱｸｽﾙｱｯｾﾝ	1	1-109 [FC/RINFC] INC.1-33
-	52N53-70202		AXLE-ASSY,STEERING	ｽﾃｱﾘﾝｸﾞｱｸｽﾙｱｯｾﾝ	1	110- [FC/RINFC] INC.1-33
901	215E4-39801	K1	KIT,REPAIR	ﾘﾍﾟｱｷｯﾄ	1	INC.2-4,13,14,17-20,22
1	22N54-30121		AXLE,STEERING	ｱｸｽﾙ	1	1-109
-	22N54-30122		AXLE,STEERING	ｱｸｽﾙ	1	110-
-	52N53-70121		AXLE,STEERING	ｱｸｽﾙ	1	1-109 [FC][FC/RINFC]
-	52N53-70122		AXLE,STEERING	ｱｸｽﾙ	1	110- [FC][FC/RINFC]
2	23654-32161	*	O-RING	Oﾘﾝｸﾞ	2	
3	214A4-32161	*	SEAL,DUST	ｼｰﾙ	3	
4	03146-13201	*	BEARING,NEEDLE	ﾍﾞｱﾘﾝｸﾞ	4	
5	514A3-72052		PLATE,CAP	ﾌﾟﾚｰﾄ	1	[FC][FC/RINFC]
6	514A3-72062		PACKING	ﾊﾟｯｷﾝｸﾞ	1	[FC][FC/RINFC]
7	01141-06012		BOLT	ﾎﾞﾙﾄ	3	[FC][FC/RINFC]
8	02010-10006		WASHER	ﾜｯｼｬ	3	[FC][FC/RINFC]
9	22N54-32501		KNUCKLE,RH	ﾅｯｸﾙ	1	
-	52N53-72201		KNUCKLE,RH	ﾅｯｸﾙ	1	[FC/RINFC]
10	22N54-32511		KNUCKLE,LH	ﾅｯｸﾙ	1	
-	52N53-72211		KNUCKLE,LH	ﾅｯｸﾙ	1	[FC/RINFC]
11	514A3-72211		SEAT,OIL-SEAL	ｼｰﾄ	2	[FC/RINFC]
12	22N54-32481		BUSHING	ﾌﾞｯｼﾝｸﾞ	2	
13	22214-30321	*	SHIM	ｼﾑ	6	
14	03126-83201	*	BEARING,THRUST	ﾍﾞｱﾘﾝｸﾞ	2	
15	24454-32232		KINGPIN	ｷﾝｸﾞﾋﾟﾝ	1	
16	22N54-32201		KINGPIN	ｷﾝｸﾞﾋﾟﾝ	1	
17	215E4-32341	*	PIN,LOCK	ﾋﾟﾝ	2	
18	02000-00010	*	WASHER	ﾜｯｼｬ	2	
19	02010-00010	*	WASHER	ﾜｯｼｬ	2	
20	01400-00010	*	NUT	ﾅｯﾄ	2	
21	214A8-52051		FITTING	ﾌｨｯﾃｨﾝｸﾞ	1	
22	04901-00190	*	FITTING	ﾌｨｯﾃｨﾝｸﾞ	1	
23	04901-00191		FITTING	ﾌｨｯﾃｨﾝｸﾞ	2	
24	22199-12401		CAP,NIPPLE	ｷｬｯﾌﾟ	4	
25	214A4-32041		HUB,REAR	ﾊﾌﾞ	2	
26	23654-32041		BOLT,HUB	ﾎﾞﾙﾄ	16	
27	03071-30211		BEARING,TAPER-ROLLER	ﾍﾞｱﾘﾝｸﾞ	2	
28	03071-30207		BEARING,TAPER-ROLLER	ﾍﾞｱﾘﾝｸﾞ	2	
29	03217-08501		SEAL,OIL	ｼｰﾙ	2	
30	01412-00030		NUT,CASTLE	ﾅｯﾄ	2	

FIG.74 STEERING AXLE

(F7Z24310) ステアリング゛アクスル

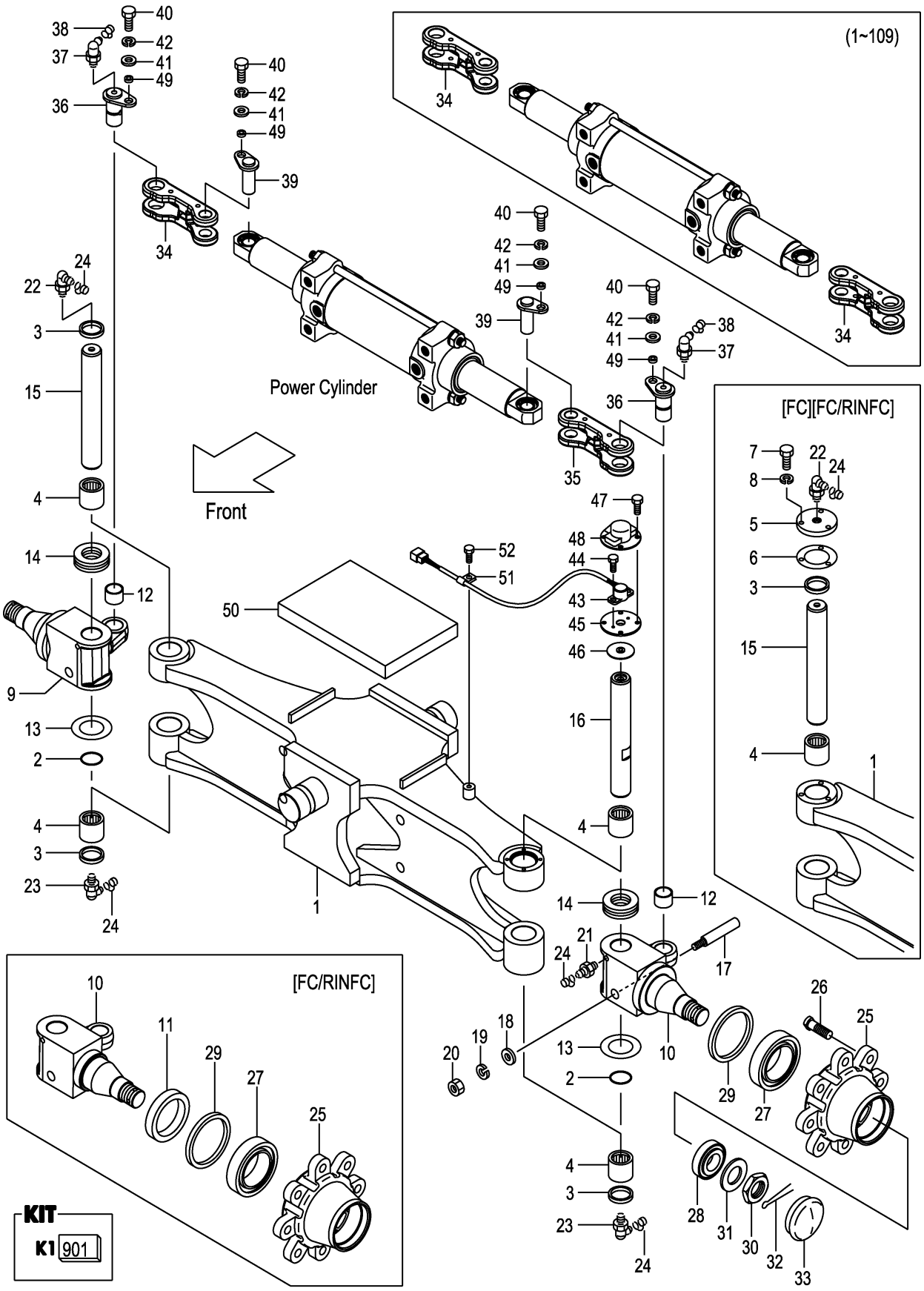

A:FD20C3Z FD20T3Z FD25C3Z FD25T3Z

Item No	Part No.	Mark	Description		Req'd	Remarks : Serial No.
31	02000-00030		WASHER	ﾜｯｼｬ	2	
32	02200-06055		PIN,COTTER	ﾋﾟﾝ	2	
33	214A4-32051		CAP	ｷｬｯﾌﾟ	2	
34	22N54-32801		YOKE	ﾖｰｸ	2	1-109
-	22N54-32941		YOKE,RH	ﾖｰｸ	1	110-112
-	22N54-32351		YOKE,RH	ﾖｰｸ	1	113-
35	22N54-32971		YOKE,LH	ﾖｰｸ	1	110-112
-	22N54-32361		YOKE,LH	ﾖｰｸ	1	113-
36	22N54-32131		PIN	ﾋﾟﾝ	2	
37	04901-00190		FITTING	ﾌｨｯﾃｨﾝｸﾞ	2	
38	22199-12401		CAP,NIPPLE	ｷｬｯﾌﾟ	2	
39	22N54-32151		PIN	ﾋﾟﾝ	2	
40	01103-08016		BOLT	ﾎﾞﾙﾄ	4	
41	02000-00008		WASHER	ﾜｯｼｬ	4	
42	02011-00008		WASHER	ﾜｯｼｬ	4	
43	22N54-32211		POTENTIOMETER	ﾎﾟﾃﾝｼｵﾒｰﾀ	1	
44	01185-04010		BOLT	ﾎﾞﾙﾄ	2	
45	22N54-32221		ADAPTER	ｱﾀﾞﾌﾟﾀ	1	
46	22N54-32231		PACKING	ﾊﾟｯｷﾝｸﾞ	1	
47	01030-06010		BOLT	ﾎﾞﾙﾄ	4	
48	22N54-32241		COVER,POTENTIOMETER	ｶﾊﾞｰ	1	
49	22N54-32181		COLLAR	ｶﾗｰ	4	
50	22N54-32401		RUBBER	ﾗﾊﾞｰ	1	1-109
-	22N54-32402		RUBBER	ﾗﾊﾞｰ	1	110-
51	26602-42041		CLIP	ｸﾘｯﾌﾟ	1	
52	01185-08016		BOLT	ﾎﾞﾙﾄ	1	

M E M O

M E M O

FIG.75 AXLE SUPPORT

(F7Z24330) アクスルサポート

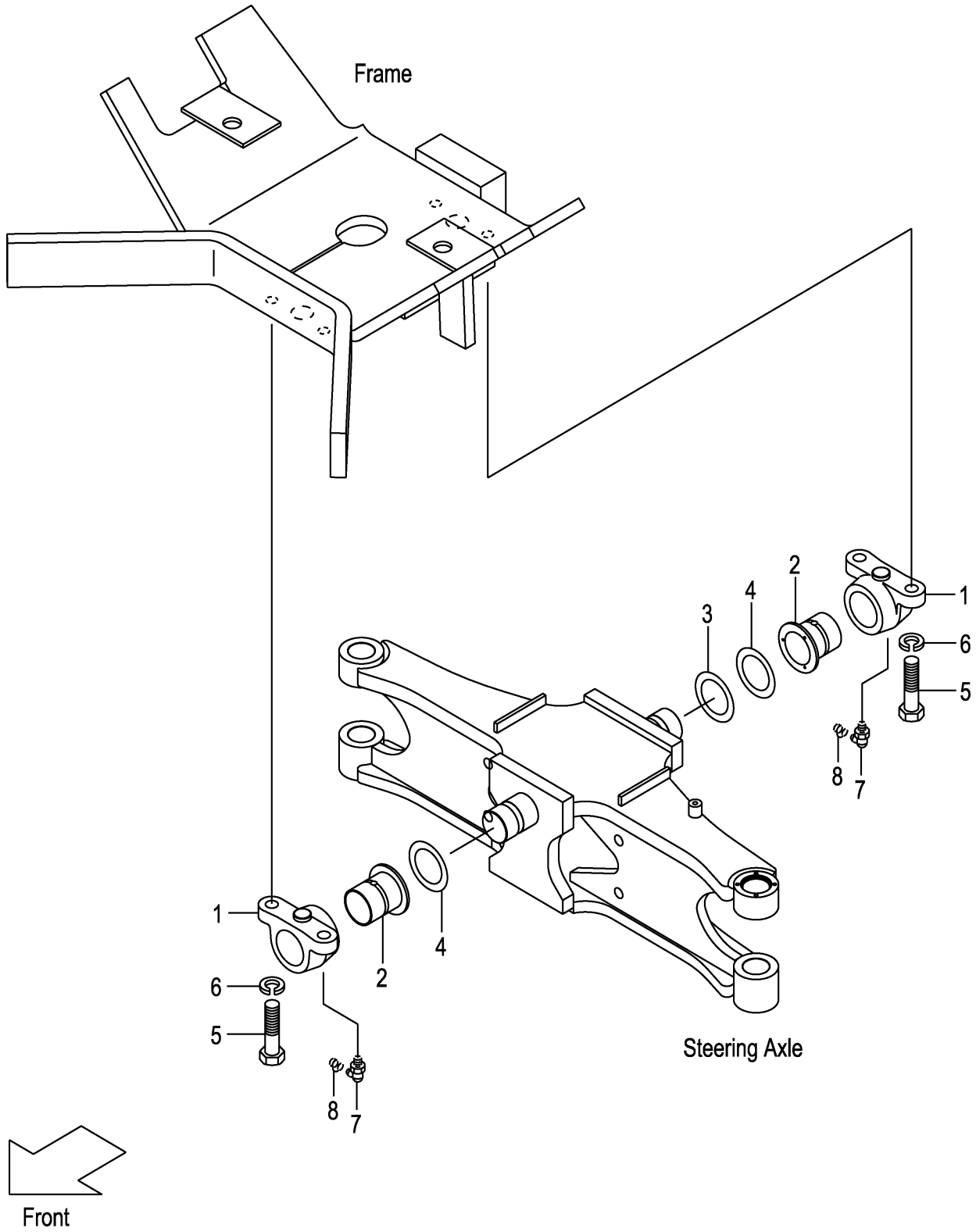

FIG.75

(F7Z24330)

A:FD20C3Z FD20T3Z FD25C3Z FD25T3Z

Item No	Part No.	Mark	Description		Req'd	Remarks : Serial No.
1	22N54-32311		SUPPORT,REAR-AXLE	ｻﾎﾟｰﾄ	2	
2	22N54-32321		BUSHING,AXLE-SUPPORT	ﾌﾞｯｼﾝｸﾞ	2	
3	214A4-32201		SHIM,T-0.5	ｼﾑ	1	
4	214A4-32211		SHIM,T-1.0	ｼﾑ	2	
5	01100-16045		BOLT	ﾎﾞﾙﾄ	4	
6	02010-00016		WASHER	ﾜｯｼｬ	4	
7	04901-00190		FITTING	ﾌｨｯﾃｨﾝｸﾞ	2	
8	22199-12401		CAP,NIPPLE	ｷｬｯﾌﾟ	2	

FIG.76 HUB NUT

(F7Z24410) ﾊﾌﾞﾅｯﾄ

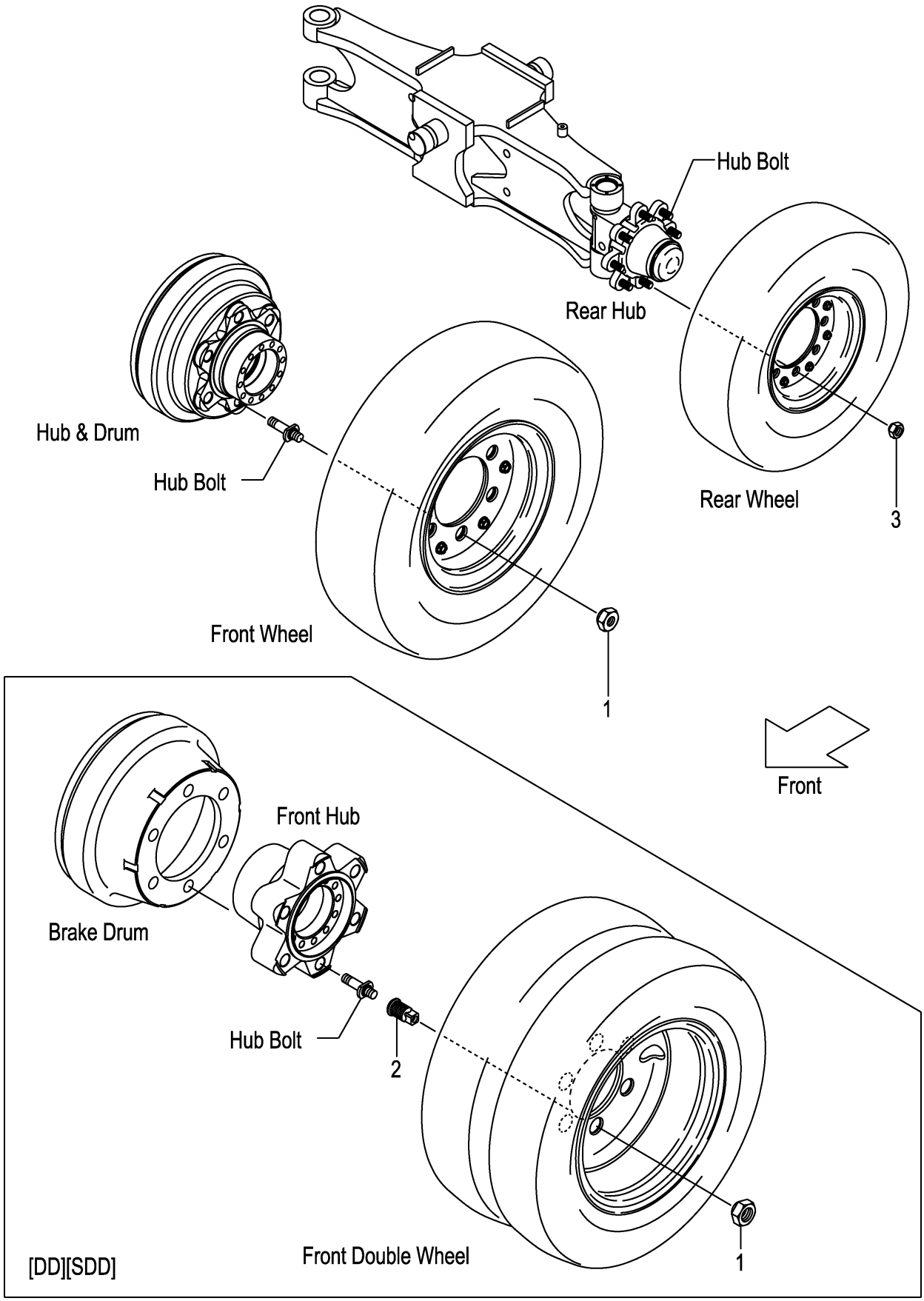

FIG.76

(F7Z24410)

A:FD20C3Z FD20T3Z FD25C3Z FD25T3Z

Item No	Part No.	Mark	Description	Req'd	Remarks : Serial No.
1	24354-32311		NUT,HUB ﾅｯﾄ	12	(FRONT)
-	57045-52141		NUT,HUB ﾅｯﾄ	12	[FC](FRONT)
-	23813-00081		NUT,HUB ﾅｯﾄ	12	[DD][SDD](FRONT)
-	514A3-72101		NUT,HUB ﾅｯﾄ	12	[FC/DD][FC/SDD](FRONT)
2	23813-00071		NUT,INNER ﾅｯﾄ	12	[DD][SDD][FC/DD][FC/SDD] (FRONT)
3	23654-34051		NUT,HUB ﾅｯﾄ	16	(REAR)
-	57045-52151		NUT,HUB ﾅｯﾄ	16	[FC](REAR)

FIG.77 FENDER [DD][SDD][TUJSF]

(F7Z24420) ﾌｪﾝﾀﾞ

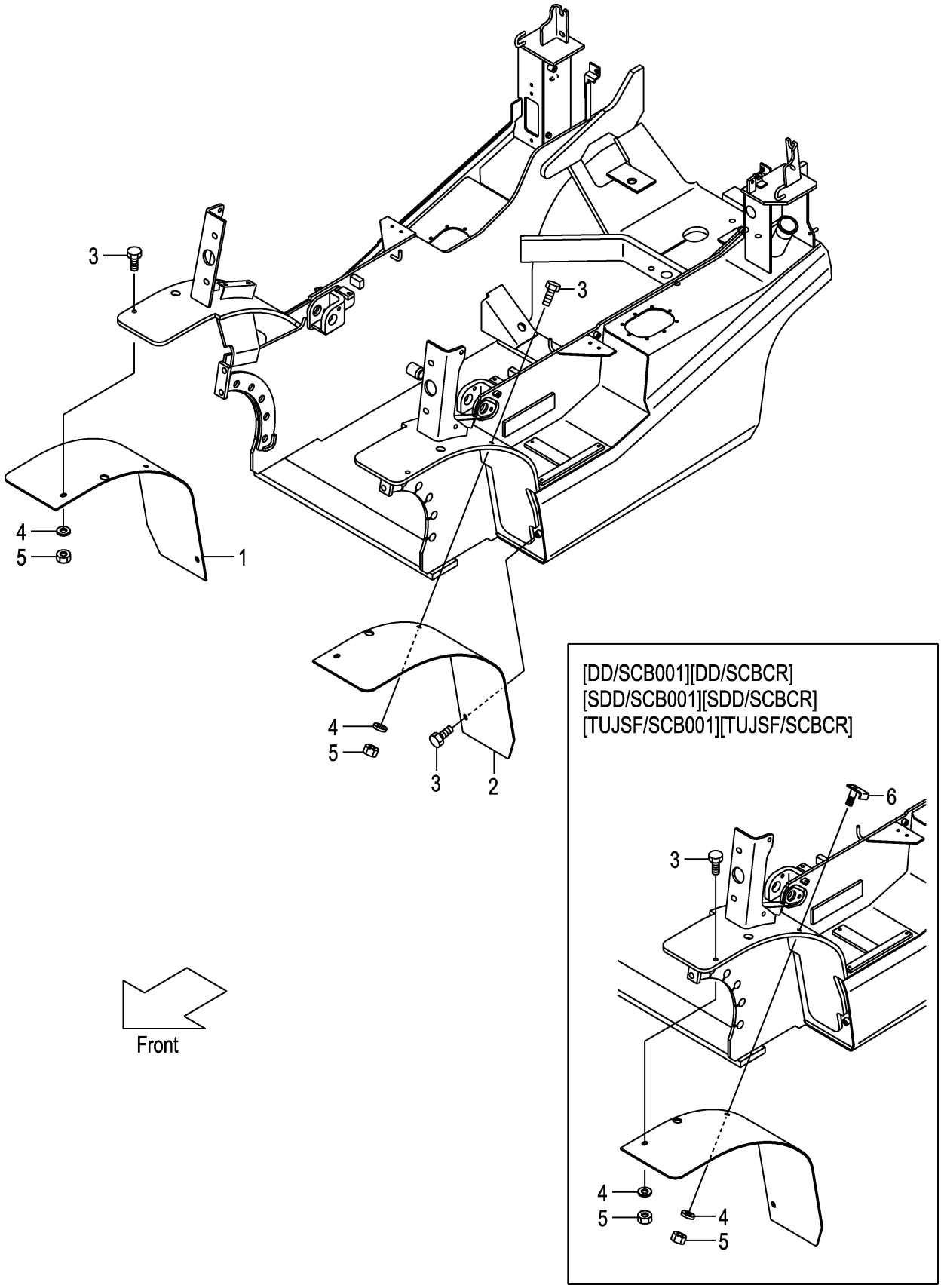

A:FD20C3Z FD20T3Z FD25C3Z FD25T3Z

Item No	Part No.	Mark	Description		Req'd	Remarks : Serial No.
1	52N57-42001		FENDER,FRONT,RH	ﾌｪﾝﾀﾞ	1	[DD]
-	52N57-42021		FENDER,FRONT,RH	ﾌｪﾝﾀﾞ	1	[SDD]
-	52N57-42041		FENDER,FRONT,RH	ﾌｪﾝﾀﾞ	1	[TUJSF]
2	52N57-42011		FENDER,FRONT,LH	ﾌｪﾝﾀﾞ	1	[DD]
-	52N57-42031		FENDER,FRONT,LH	ﾌｪﾝﾀﾞ	1	[SDD]
-	52N57-42051		FENDER,FRONT,LH	ﾌｪﾝﾀﾞ	1	[TUJSF]
3	01186-10030		BOLT	ﾎﾞﾙﾄ	6	[DD][SDD][TUJSF]
-	01186-10030		BOLT	ﾎﾞﾙﾄ	4	[DD/SCB001][SDD/SCB001] [TUJSF/SCB001]
-	01186-10030		BOLT	ﾎﾞﾙﾄ	4	[DD/SCBCR][SDD/SCBCR] [TUJSF/SCBCR]
4	02000-00010		WASHER	ﾜｯｼｬ	4	[DD][SDD][TUJSF]
5	01400-00010		NUT	ﾅｯﾄ	4	[DD][SDD][TUJSF]
6	52N55-32211		BOLT,FENDER	ﾎﾞﾙﾄ	2	[DD/SCB001][SDD/SCB001] [TUJSF/SCB001]
-	52N55-32211		BOLT,FENDER	ﾎﾞﾙﾄ	2	[DD/SCBCR][SDD/SCBCR] [TUJSF/SCBCR]

FIG.78 FRONT WHEEL

(F7Z24430) フロントホイール

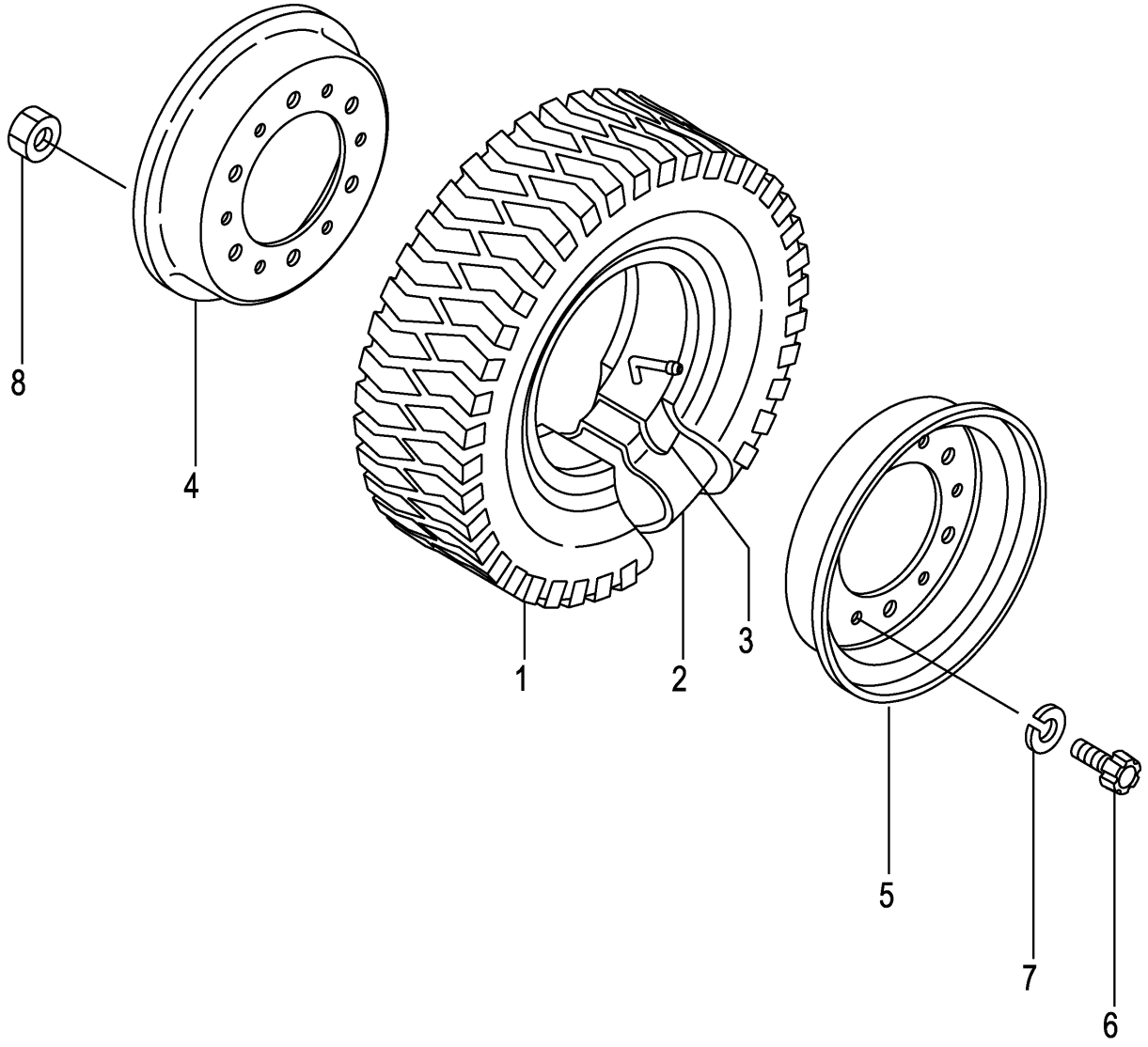

A:FD20C3Z FD20T3Z FD25C3Z FD25T3Z

Item No	Part No.	Mark	Description		Req'd	Remarks : Serial No.
A1	53456-80902		WHEEL-ASSY,FRONT	ﾌﾛﾝﾄﾎｲｰﾙｱｯｾﾝ	2	INC.1-8
1	06006-70012		TIRE,700-12-12	ﾀｲﾔ	2	
2	06711-70012		TUBE,700-12-12T	ﾁｭｰﾌﾞ	2	
3	06701-70012		FLAP,700-12-12F	ﾌﾗｯﾌﾟ	2	
A2	23454-40501		RIM-ASSY,500S-12	ﾘﾑｱｯｾﾝ	2	INC.4-8
4	NO PART NO.	#	RIM,INSIDE	ﾘﾑ	2	
5	NO PART NO.	#	RIM,OUTSIDE	ﾘﾑ	2	
6	514A3-82601		BOLT	ﾎﾞﾙﾄ	12	
7	02011-00016		WASHER	ﾜｯｼｬ	12	
8	01400-10016		NUT	ﾅｯﾄ	12	

FIG.79 FRONT WHEEL [DR F]

(F7Z24440) フロントホイール

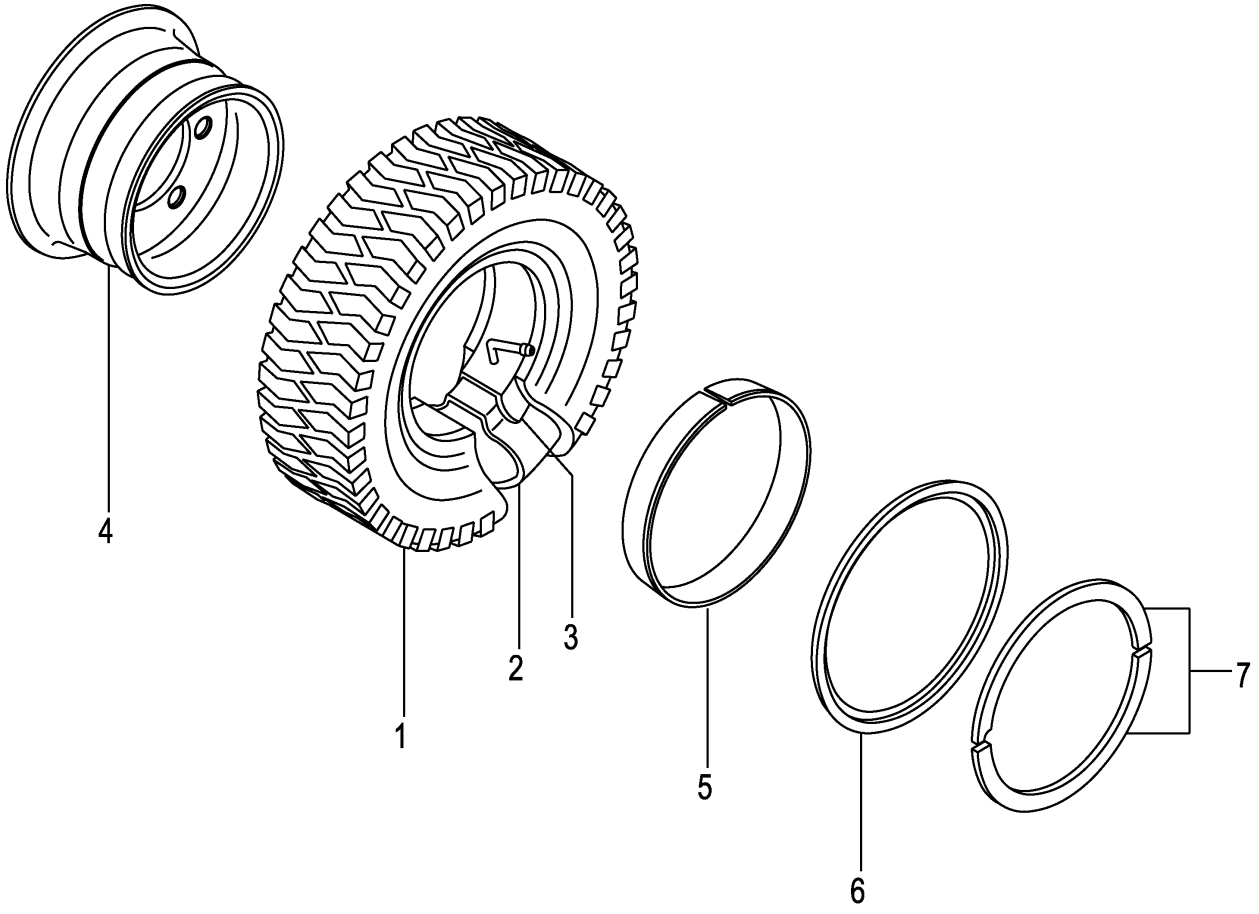

A:FD20C3Z FD20T3Z FD25C3Z FD25T3Z

Item No	Part No.	Mark	Description		Req'd	Remarks : Serial No.
A1	53666-80601		WHEEL-ASSY,FRONT	ﾌﾛﾝﾄﾎｲｰﾙｱｯｾﾝ	2	[DR F] INC.1-7
1	06006-70012		TIRE,700-12-12	ﾀｲﾔ	2	[DR F]
2	06711-70012		TUBE,700-12-12T	ﾁｭｰﾌﾞ	2	[DR F]
3	06701-70012		FLAP,700-12-12F	ﾌﾗｯﾌﾟ	2	[DR F]
A2	53666-81801		RIM-ASSY,500S-12	ﾘﾑｱｯｾﾝ	2	[DR F] INC.4-7
4	NO PART NO.	#	RIM	ﾘﾑ	2	[DR F]
5	53656-82041		BAND	ﾊﾞﾝﾄﾞ	2	[DR F]
6	53656-82051		FLANGE,SIDE	ﾌﾗﾝｼﾞ	2	[DR F]
7	53656-82061		RING,LOCK	ﾘﾝｸﾞ	2	[DR F]

FIG.80 FRONT WHEEL [TJ F][TJSF][T F][TS F]

(F7Z24450) フロントホイール

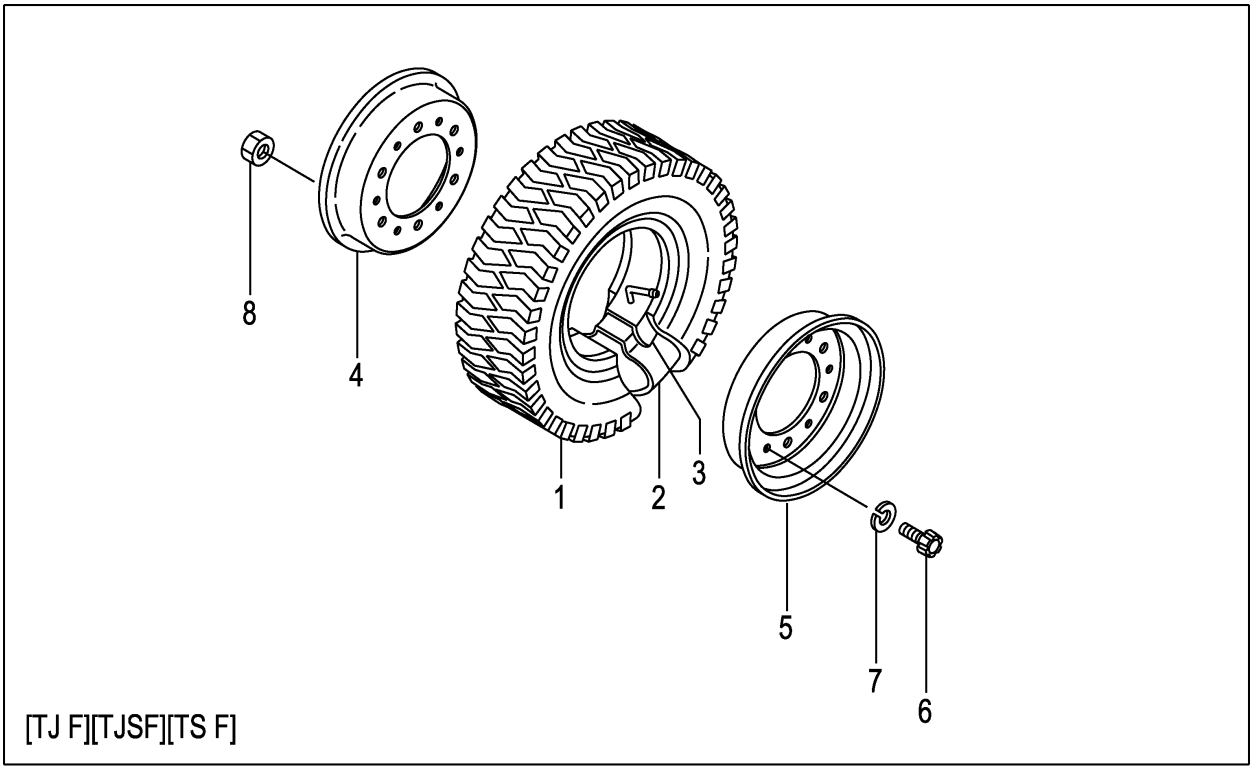

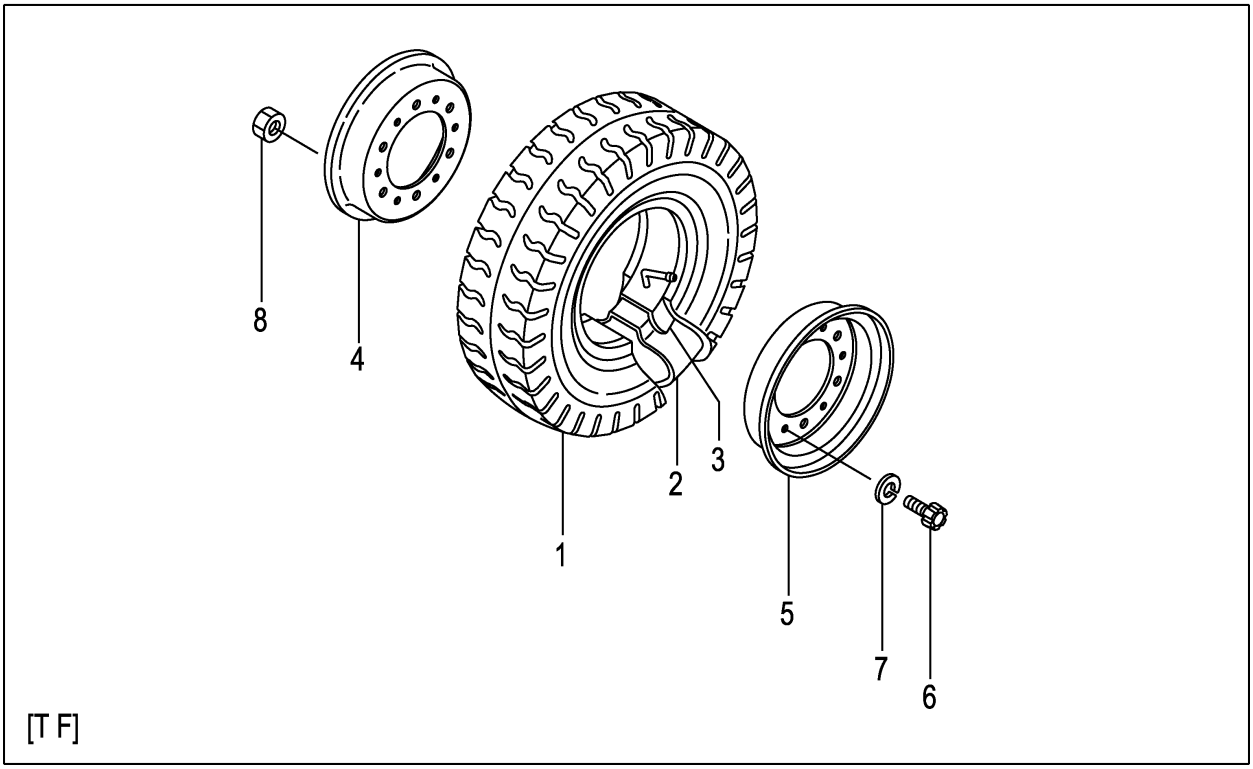

A:FD20C3Z FD20T3Z FD25C3Z FD25T3Z

Item No	Part No.	Mark	Description		Req'd	Remarks : Serial No.
A1	53456-80902		WHEEL-ASSY,FRONT	ﾌﾛﾝﾄﾎｲｰﾙｱｯｾﾝ	2	[TJ F] INC.1-8
-	53456-80702		WHEEL-ASSY,FRONT	ﾌﾛﾝﾄﾎｲｰﾙｱｯｾﾝ	2	[TJSF] INC.1-8
-	23454-40601		WHEEL-ASSY,FRONT	ﾌﾛﾝﾄﾎｲｰﾙｱｯｾﾝ	2	[T F] INC.1-8
-	53456-80502		WHEEL-ASSY,FRONT	ﾌﾛﾝﾄﾎｲｰﾙｱｯｾﾝ	2	[TS F] INC.1-8
1	06006-70012		TIRE,700-12-12	ﾀｲﾔ	2	[TJ F]
-	06005-70012		TIRE,700-12-12	ﾀｲﾔ	2	[TJSF]
-	06001-70012		TIRE,700-12-12	ﾀｲﾔ	2	[T F]
-	06007-70012		TIRE,700-12-12	ﾀｲﾔ	2	[TS F]
2	06711-70012		TUBE,700-12-12T	ﾁｭｰﾌﾞ	2	[TJ F][TJSF][T F][TS F]
3	06701-70012		FLAP,700-12-12F	ﾌﾗｯﾌﾟ	2	[TJ F][TJSF][T F][TS F]
A2	23454-40501		RIM-ASSY,500S-12	ﾘﾑｱｯｾﾝ	2	[TJ F][TJSF][T F][TS F] INC.4-8
4	NO PART NO.	#	RIM,INSIDE	ﾘﾑ	2	[TJ F][TJSF][T F][TS F]
5	NO PART NO.	#	RIM,OUTSIDE	ﾘﾑ	2	[TJ F][TJSF][T F][TS F]
6	514A3-82601		BOLT	ﾎﾞﾙﾄ	12	[TJ F][TJSF][T F][TS F]
7	02011-00016		WASHER	ﾜｯｼｬ	12	[TJ F][TJSF][T F][TS F]
8	01400-10016		NUT	ﾅｯﾄ	12	[TJ F][TJSF][T F][TS F]

FIG.81 FRONT WHEEL [(TJ F,TJSF,T F,TS F)/DR F]

(F7Z24460) フロントホイール

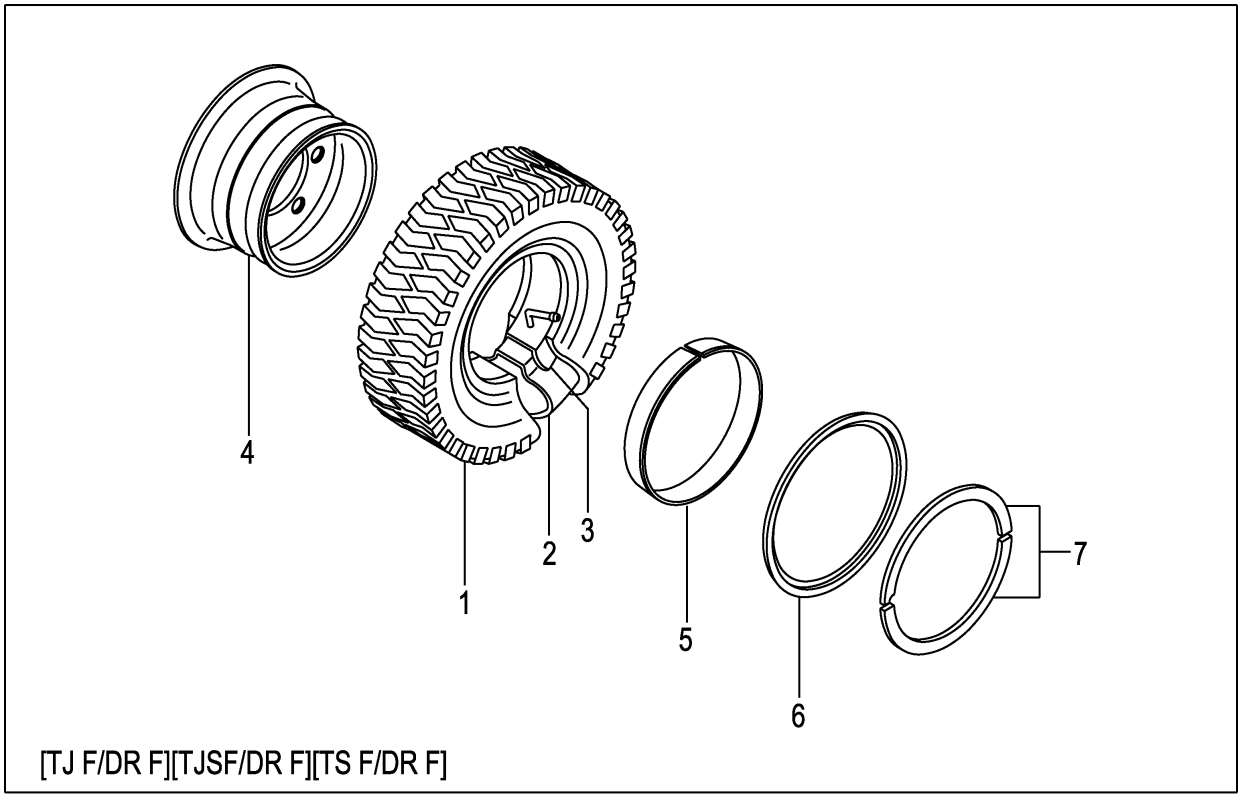

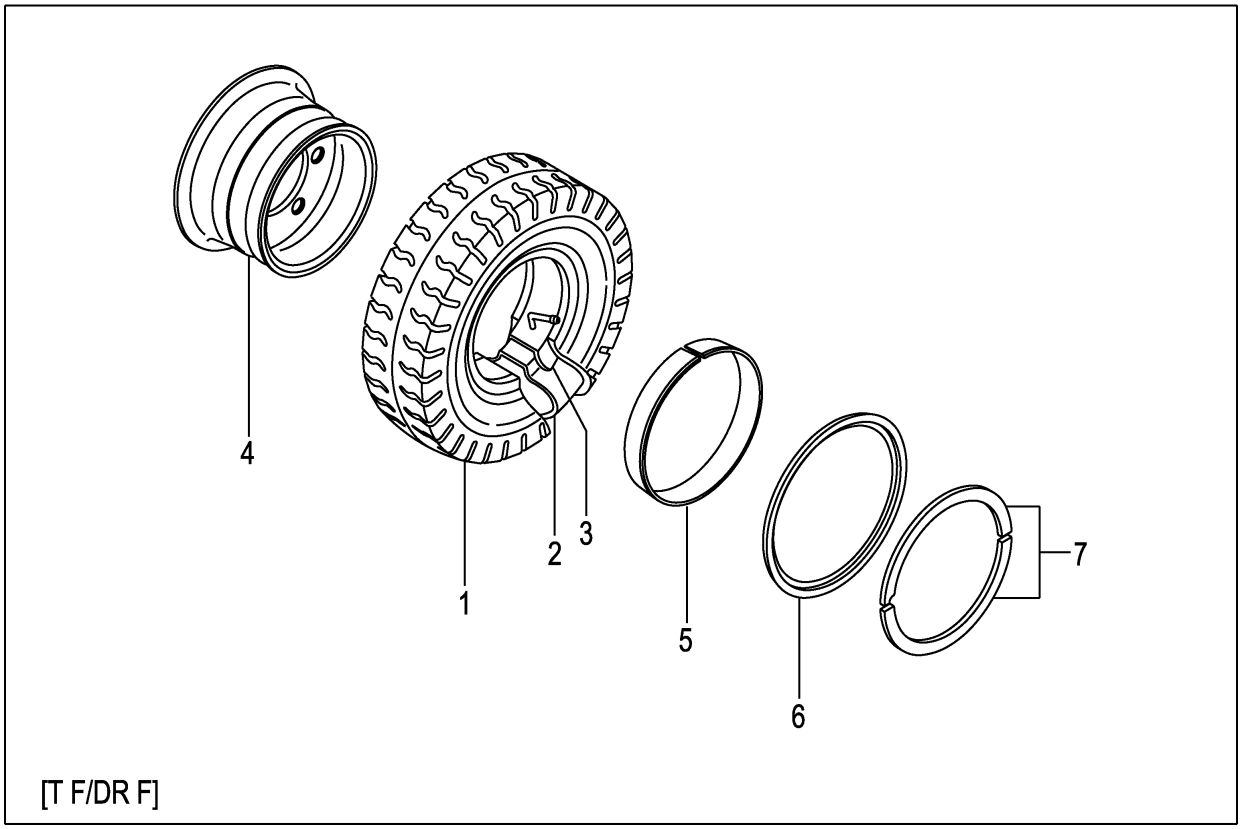

A:FD20C3Z FD20T3Z FD25C3Z FD25T3Z

Item No	Part No.	Mark	Description		Req'd	Remarks : Serial No.
A1	53666-80601		WHEEL-ASSY,FRONT	ﾌﾛﾝﾄﾎｲｰﾙｱｯｾﾝ	2	[TJ F/DR F] INC.1-7
-	53666-80501		WHEEL-ASSY,FRONT	ﾌﾛﾝﾄﾎｲｰﾙｱｯｾﾝ	2	[TJSF/DR F] INC.1-7
-	53666-80201		WHEEL-ASSY,FRONT	ﾌﾛﾝﾄﾎｲｰﾙｱｯｾﾝ	2	[T F/DR F] INC.1-7
-	53666-80701		WHEEL-ASSY,FRONT	ﾌﾛﾝﾄﾎｲｰﾙｱｯｾﾝ	2	[TS F/DR F] INC.1-7
1	06006-70012		TIRE,700-12-12	ﾀｲﾔ	2	[TJ F/DR F]
-	06005-70012		TIRE,700-12-12	ﾀｲﾔ	2	[TJSF/DR F]
-	06001-70012		TIRE,700-12-12	ﾀｲﾔ	2	[T F/DR F]
-	06007-70012		TIRE,700-12-12	ﾀｲﾔ	2	[TS F/DR F]
2	06711-70012		TUBE,700-12-12T	ﾁｭｰﾌﾞ	2	[TJ F/DR F][TJSF/DR F]
						[T F/DR F][TS F/DR F]
3	06701-70012		FLAP,700-12-12F	ﾌﾗｯﾌﾟ	2	[TJ F/DR F][TJSF/DR F]
						[T F/DR F][TS F/DR F]
A2	53666-81801		RIM-ASSY,500S-12	ﾘﾑｱｯｾﾝ	2	[TJ F/DR F][T F/DR F] INC.4-7
-	53666-81801		RIM-ASSY,500S-12	ﾘﾑｱｯｾﾝ	2	[TJSF/DR F][TS F/DR F] INC.4-7
4	NO PART NO.	#	RIM	ﾘﾑ	2	[TJ F/DR F][TJSF/DR F]
						[T F/DR F][TS F/DR F]
5	53656-82041		BAND	ﾊﾞﾝﾄﾞ	2	[TJ F/DR F][TJSF/DR F]
						[T F/DR F][TS F/DR F]
6	53656-82051		FLANGE,SIDE	ﾌﾗﾝｼﾞ	2	[TJ F/DR F][TJSF/DR F]
						[T F/DR F][TS F/DR F]
7	53656-82061		RING,LOCK	ﾘﾝｸﾞ	2	[TJ F/DR F][TJSF/DR F]
						[T F/DR F][TS F/DR F]

FIG.82 FRONT WHEEL [TSUF][TUJF][TUSF][TUWF][TUGF]

(F7Z24470) フロントホイール

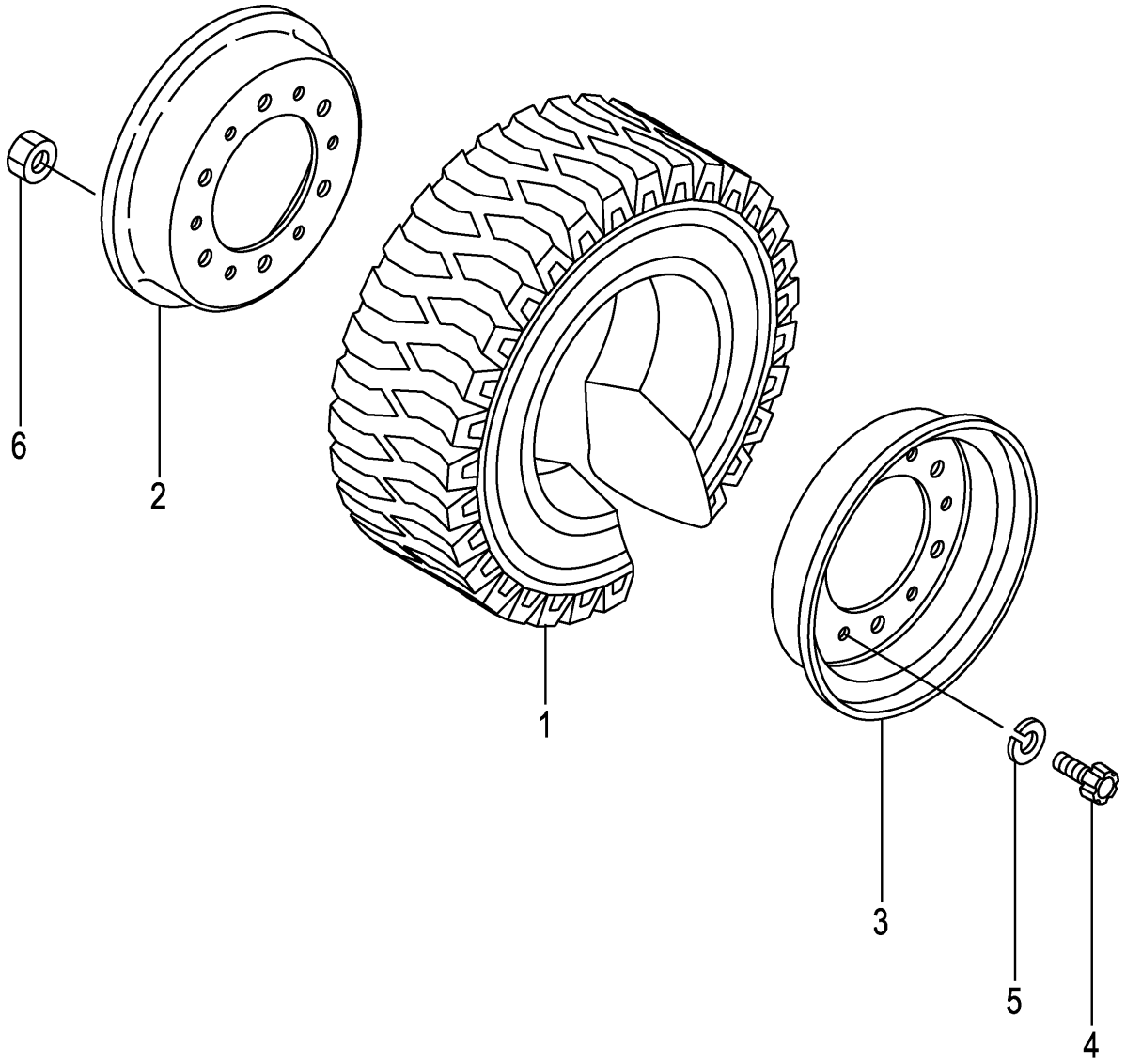

A:FD20C3Z FD20T3Z FD25C3Z FD25T3Z

Item No	Part No.	Mark	Description		Req'd	Remarks : Serial No.
A1	539A6-80201		WHEEL-ASSY,FRONT	ﾌﾛﾝﾄﾎｲｰﾙｱｯｾﾝ	2	[TSUF] INC.1-6
-	52676-80601		WHEEL-ASSY,FRONT	ﾌﾛﾝﾄﾎｲｰﾙｱｯｾﾝ	2	[TUJF] INC.1-6
-	52676-80601		WHEEL-ASSY,FRONT	ﾌﾛﾝﾄﾎｲｰﾙｱｯｾﾝ	2	[TUJF] INC.1-6
-	522A3-80401		WHEEL-ASSY,FRONT	ﾌﾛﾝﾄﾎｲｰﾙｱｯｾﾝ	2	[TUJF] INC.1-6
-	522A3-80401		WHEEL-ASSY,FRONT	ﾌﾛﾝﾄﾎｲｰﾙｱｯｾﾝ	2	[TUJF/EX] INC.1-6
-	522A6-80221		WHEEL-ASSY,FRONT	ﾌﾛﾝﾄﾎｲｰﾙｱｯｾﾝ	2	[TUSF] INC.1-6
-	522A6-80201		WHEEL-ASSY,FRONT	ﾌﾛﾝﾄﾎｲｰﾙｱｯｾﾝ	2	[TUWF] INC.1-6
-	522A6-80211		WHEEL-ASSY,FRONT	ﾌﾛﾝﾄﾎｲｰﾙｱｯｾﾝ	2	[TUGF] INC.1-6
1	06807-70012		TIRE,UNIQUE,700-12	ﾀｲﾔ	2	[TSUF]
-	06806-70012		TIRE,UNIQUE,700-12	ﾀｲﾔ	2	[TUJF]
-	06806-70012		TIRE,UNIQUE,700-12	ﾀｲﾔ	2	[TUJF]
-	06807-70012		TIRE,UNIQUE,700-12	ﾀｲﾔ	2	[TUJF]
-	06807-70012		TIRE,UNIQUE,700-12	ﾀｲﾔ	2	[TUJF/EX]
-	06851-70012		TIRE,SOFTONE,700-12	ﾀｲﾔ	2	[TUSF]
-	06841-70012		TIRE,WHITE,700-12	ﾀｲﾔ	2	[TUWF]
-	06843-70012		TIRE,GREEN,700-12	ﾀｲﾔ	2	[TUGF]
A2	23454-40501		RIM-ASSY,500S-12	ﾘﾑｱｯｾﾝ	2	[TSUF][TUJF][TUSF][TUWF] [TUGF] INC.2-6
2	NO PART NO.	#	RIM,INSIDE	ﾘﾑ	2	[TSUF][TUJF][TUSF][TUWF] [TUGF]
3	NO PART NO.	#	RIM,OUTSIDE	ﾘﾑ	2	[TSUF][TUJF][TUSF][TUWF] [TUGF]
4	514A3-82601		BOLT	ﾎﾞﾙﾄ	12	[TSUF][TUJF][TUSF][TUWF] [TUGF]
5	02011-00016		WASHER	ﾜｯｼｬ	12	[TSUF][TUJF][TUSF][TUWF] [TUGF]
6	01400-10016		NUT	ﾅｯﾄ	12	[TSUF][TUJF][TUSF][TUWF] [TUGF]

FIG.83 FRONT WHEEL [TUJF/DR F]

(F7Z24480) フロントホイール

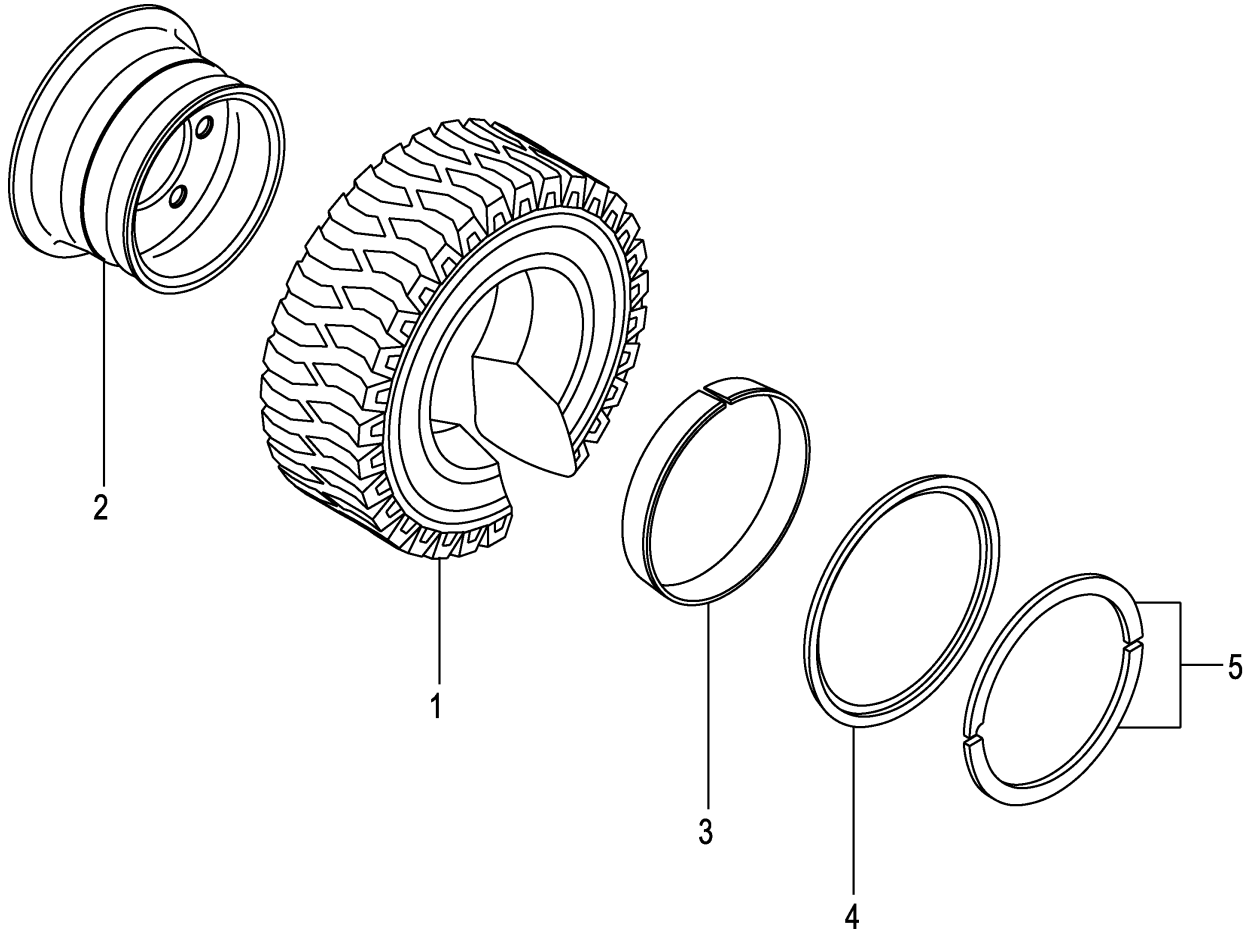

FIG.83

(F7Z24480)

A:FD20C3Z FD20T3Z FD25C3Z FD25T3Z

Item No	Part No.	Mark	Description		Req'd	Remarks : Serial No.
A1	53666-80401		WHEEL-ASSY,FRONT	ﾌﾛﾝﾄﾎｲｰﾙｱｯｾﾝ	2	[TUJF/DR F] INC.1-5
1	06806-70012		TIRE,UNIQUE,700-12	ﾀｲﾔ	2	[TUJF/DR F]
A2	53666-81801		RIM-ASSY,500S-12	ﾘﾑｱｯｾﾝ	2	[TUJF/DR F] INC.2-5
2	NO PART NO.	#	RIM	ﾘﾑ	2	[TUJF/DR F]
3	53656-82041		BAND	ﾊﾞﾝﾄﾞ	2	[TUJF/DR F]
4	53656-82051		FLANGE,SIDE	ﾌﾗﾝｼﾞ	2	[TUJF/DR F]
5	53656-82061		RING,LOCK	ﾘﾝｸﾞ	2	[TUJF/DR F]

FIG.84 FRONT WHEEL [TRAF]

(F7Z24490) フロントホイール

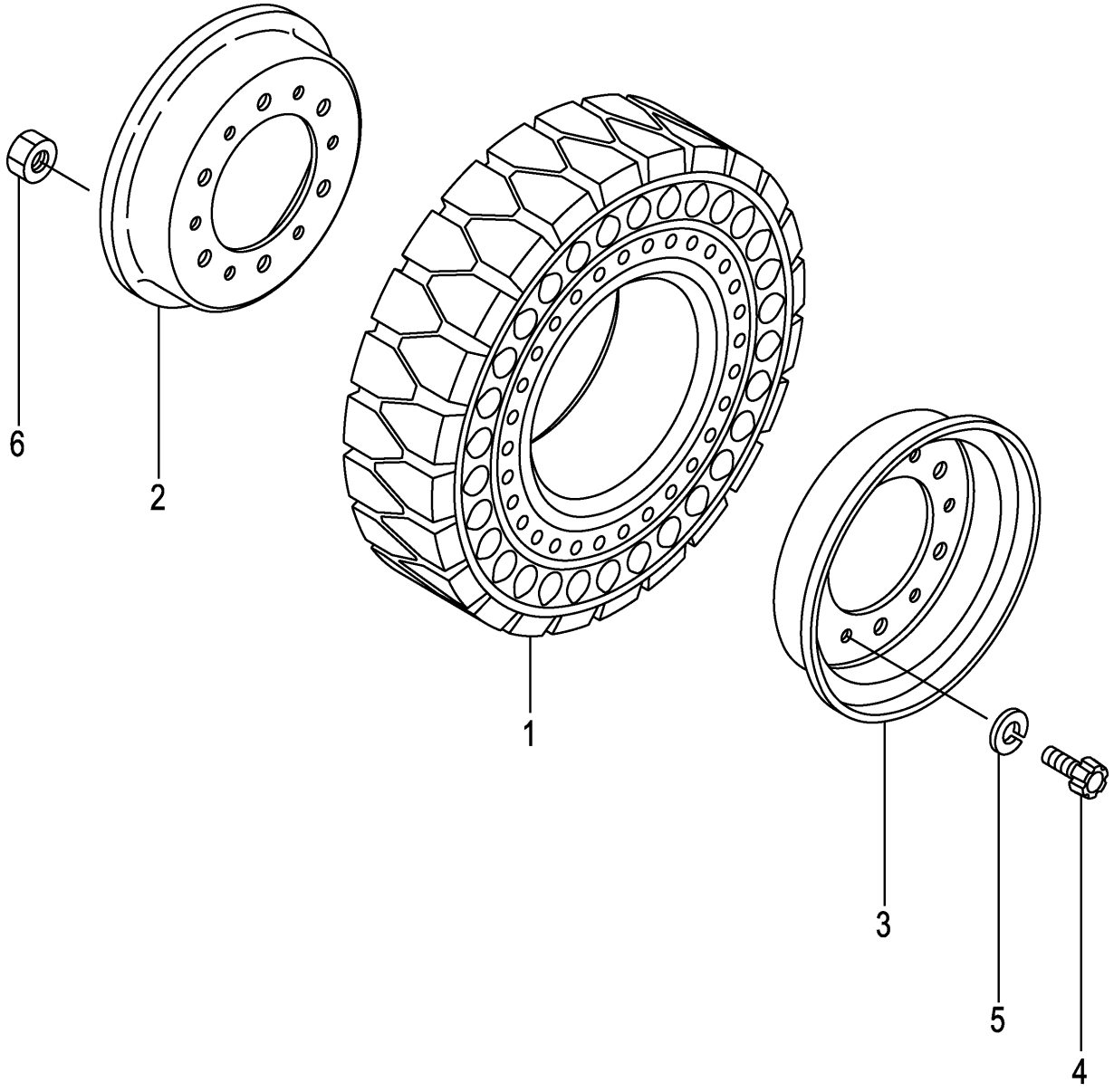

A:FD20C3Z FD20T3Z FD25C3Z FD25T3Z

Item No	Part No.	Mark	Description		Req'd	Remarks : Serial No.
A1	534A6-80171		WHEEL-ASSY,FRONT	ﾌﾛﾝﾄﾎｲｰﾙｱｯｾﾝ	2	[TRAF] INC.1-6
1	534A6-85011		TIRE,AIR-BOSS,700-12	ﾀｲﾔ	2	[TRAF]
A2	23454-40501		RIM-ASSY,500S-12	ﾘﾑｱｯｾﾝ	2	[TRAF] INC.2-6
2	NO PART NO.	#	RIM,INSIDE	ﾘﾑ	2	[TRAF]
3	NO PART NO.	#	RIM,OUTSIDE	ﾘﾑ	2	[TRAF]
4	514A3-82601		BOLT	ﾎﾞﾙﾄ	12	[TRAF]
5	02011-00016		WASHER	ﾜｯｼｬ	12	[TRAF]
6	01400-10016		NUT	ﾅｯﾄ	12	[TRAF]

FIG.85 FRONT WHEEL [TUJSF]

(F7Z244A0) フロントホイール

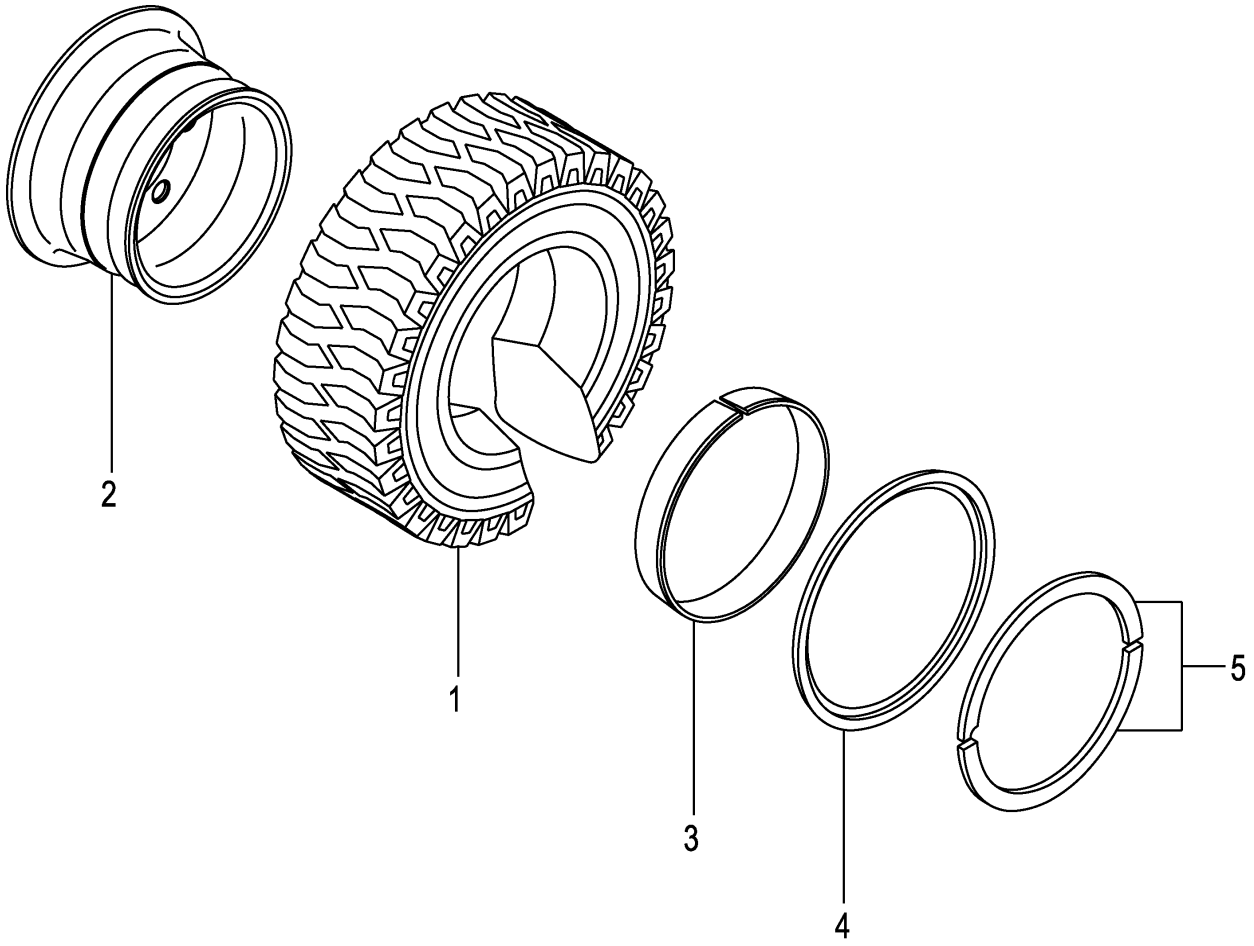

FIG.85
(F7Z244A0)

A:FD20C3Z FD20T3Z FD25C3Z FD25T3Z

Item No	Part No.	Mark	Description		Req'd	Remarks : Serial No.
A1	62156-52501		WHEEL-ASSY,FRONT	ﾌﾛﾝﾄﾎｲｰﾙｱｯｾﾝ	2	[TUJSF] INC.1-5
1	06804-70012		TIRE,UNIQUE,700-12	ﾀｲﾔ	2	[TUJSF]
A2	22854-40201		RIM-ASSY,500S-12	ﾘﾑｱｯｾﾝ	2	[TUJSF] INC.2-5
2	NO PART NO.	#	RIM	ﾘﾑ	2	[TUJSF]
3	53656-82041		BAND	ﾊﾞﾝﾄﾞ	2	[TUJSF]
4	53656-82051		FLANGE,SIDE	ﾌﾗﾝｼﾞ	2	[TUJSF]
5	53656-82061		RING,LOCK	ﾘﾝｸﾞ	2	[TUJSF]

FIG.86 FRONT WHEEL [TJ W][TJSW][T W][TS W]

(F7Z244B0) フロントホイール

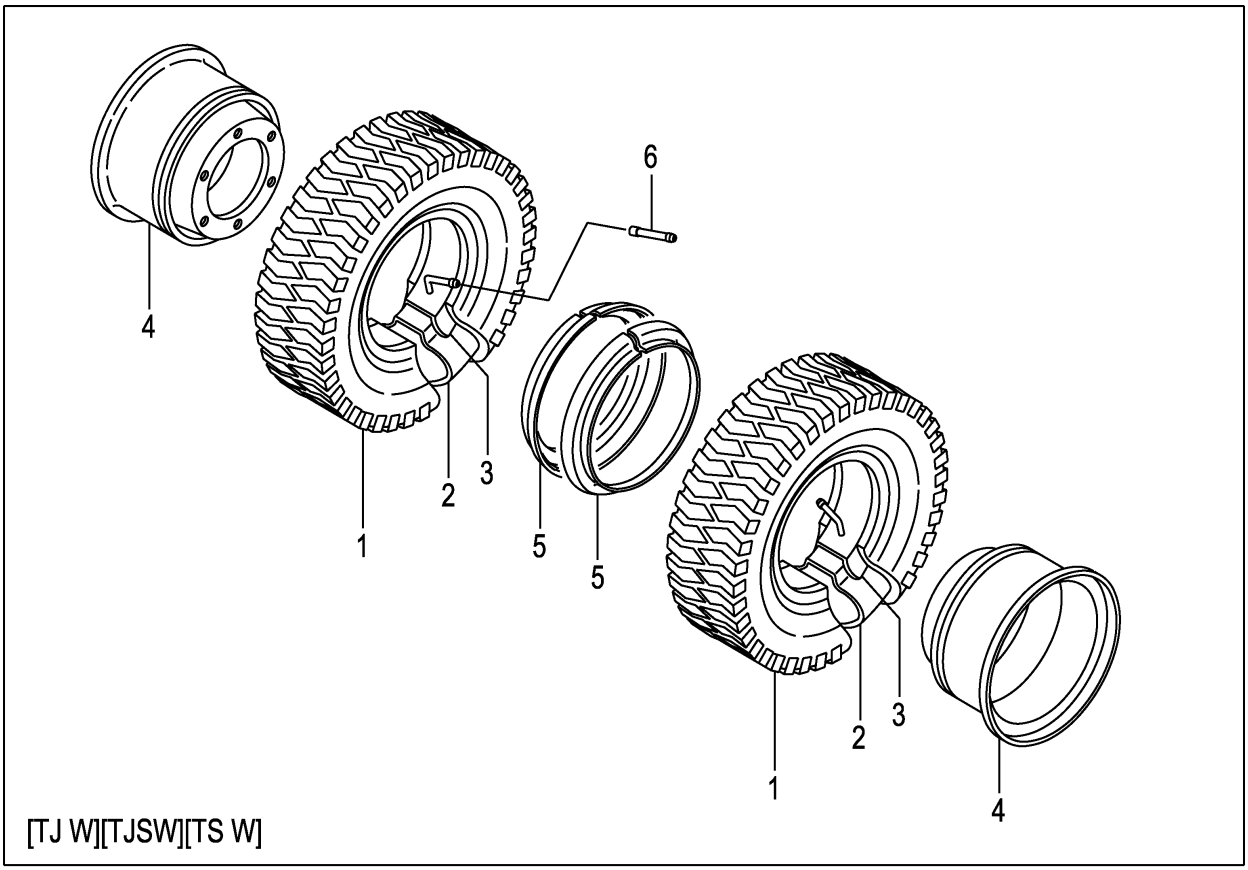

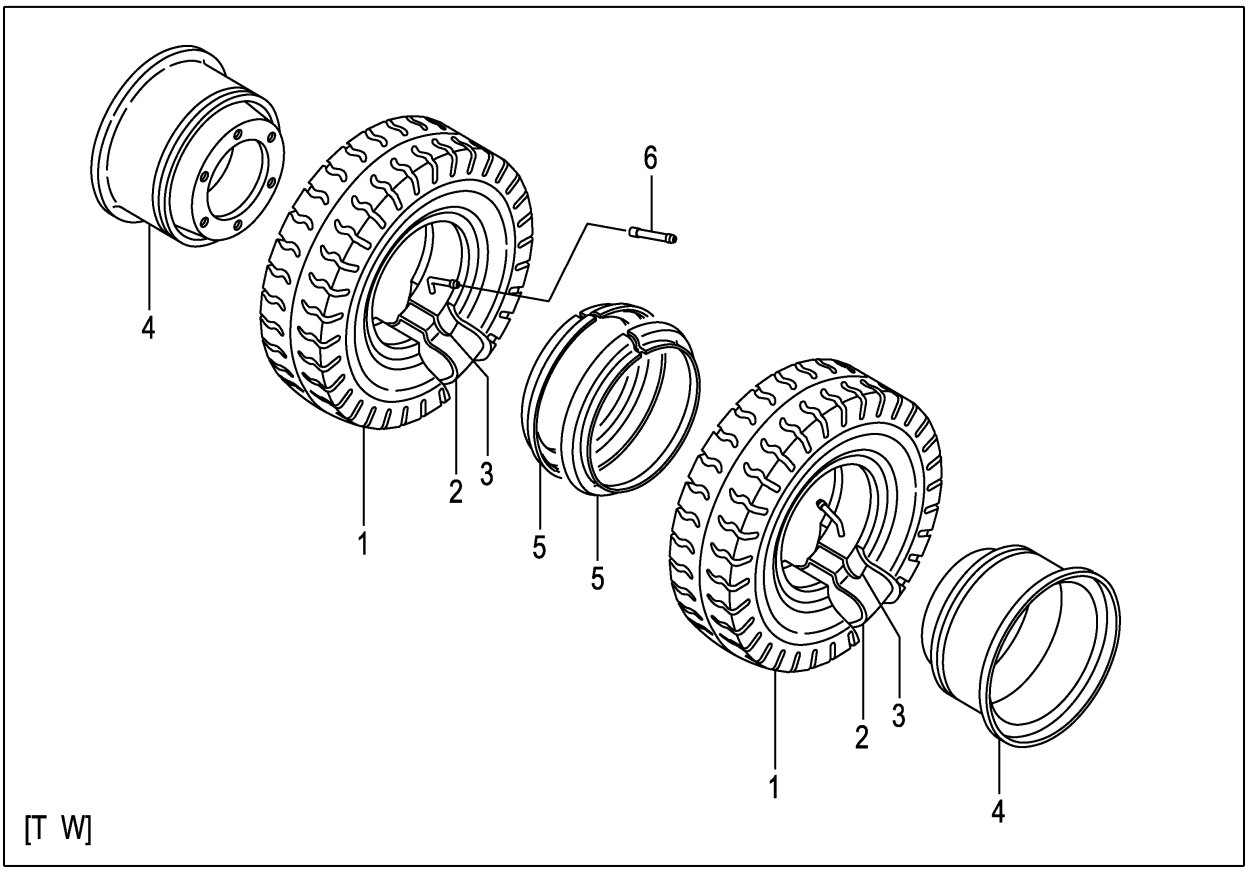

A:FD20C3Z FD20T3Z FD25C3Z FD25T3Z

Item No	Part No.	Mark	Description		Req'd	Remarks : Serial No.
A1	52676-80402		WHEEL-ASSY,FRONT	ﾌﾛﾝﾄﾎｲｰﾙｱｯｾﾝ	4	[TJ W] INC.1-5
-	52676-80202		WHEEL-ASSY,FRONT	ﾌﾛﾝﾄﾎｲｰﾙｱｯｾﾝ	4	[TJSW] INC.1-5
-	53457-40003		WHEEL-ASSY,FRONT	ﾌﾛﾝﾄﾎｲｰﾙｱｯｾﾝ	4	[T W] INC.1-5
-	52676-80302		WHEEL-ASSY,FRONT	ﾌﾛﾝﾄﾎｲｰﾙｱｯｾﾝ	4	[TS W] INC.1-5
1	06006-55015		TIRE,550-15-8	ﾀｲﾔ	4	[TJ W]
-	06005-55015		TIRE,550-15-8	ﾀｲﾔ	4	[TJSW]
-	06001-55015		TIRE,550-15-8	ﾀｲﾔ	4	[T W]
-	06007-55015		TIRE,550-15-8	ﾀｲﾔ	4	[TS W]
2	06711-55015		TUBE,550-15-8T	ﾁｭｰﾌﾞ	4	[TJ W][TJSW][T W][TS W]
3	06701-55015		FLAP,550-15-8F	ﾌﾗｯﾌﾟ	4	[TJ W][TJSW][T W][TS W]
A2	53657-42053		RIM-ASSY,450E-15	ﾘﾑｱｯｾﾝ	4	[TJ W][TJSW][T W][TS W] INC.4,5
4	NO PART NO.	#	RIM & DISK	ﾘﾑ & ﾃﾞｨｽｸ	4	[TJ W][TJSW][T W][TS W]
5	53457-42151		RING,SIDE	ﾘﾝｸﾞ	4	[TJ W][TJSW][T W][TS W]
6	06731-00120		TUBE,EXTENSION	ﾁｭｰﾌﾞ	2	[TJ W][TJSW][T W][TS W]

FIG.87 FRONT WHEEL [TUJW][TUSW][TUWW][TUGW]

(F7Z244C0) フロントホイール

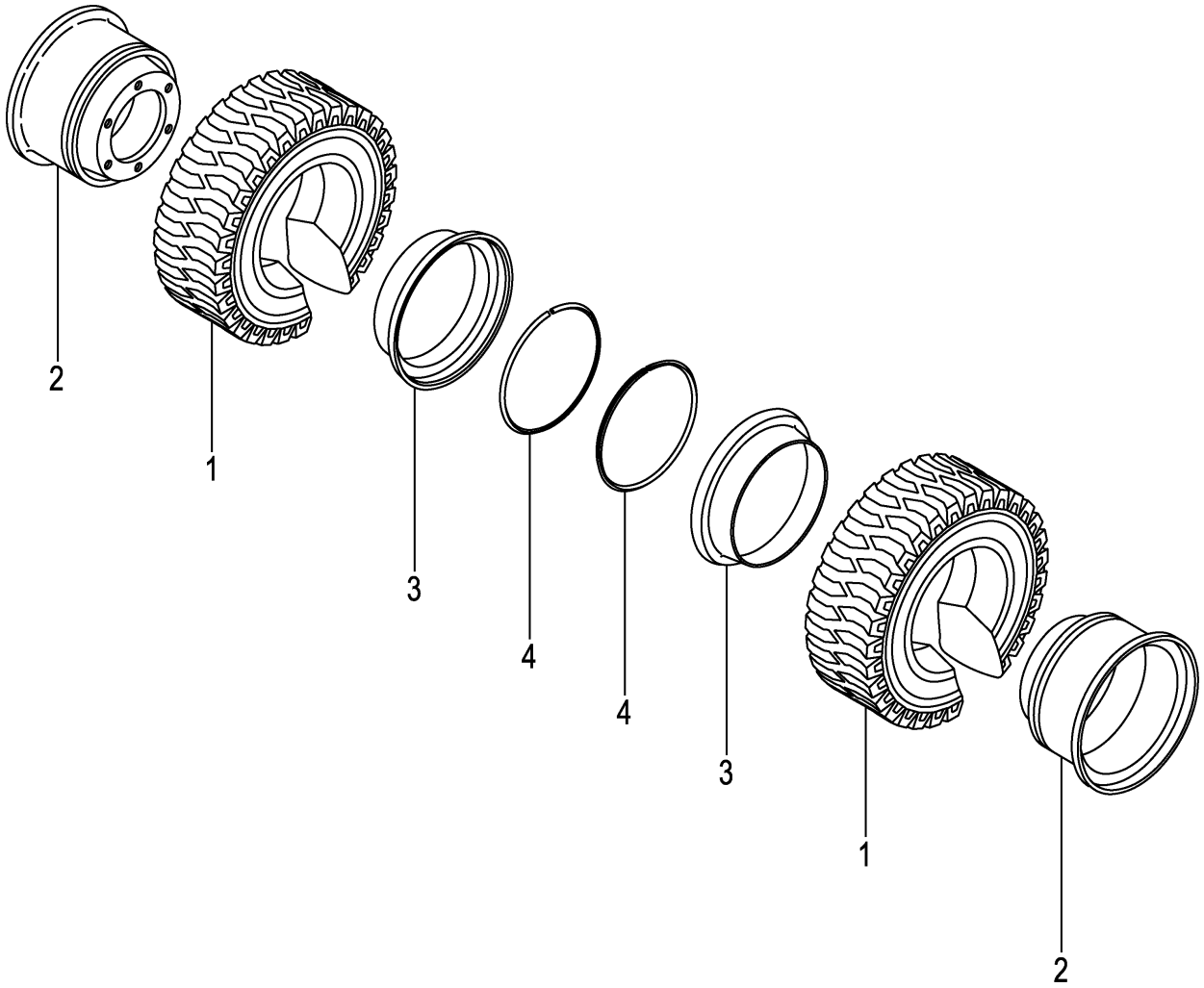

A:FD20C3Z FD20T3Z FD25C3Z FD25T3Z

Item No	Part No.	Mark	Description		Req'd	Remarks : Serial No.
A1	52676-80802		WHEEL-ASSY,FRONT	ﾌﾛﾝﾄﾎｲｰﾙｱｯｾﾝ	4	[TUJW] INC.1-4
-	522A6-80321		WHEEL-ASSY,FRONT	ﾌﾛﾝﾄﾎｲｰﾙｱｯｾﾝ	4	[TUSW] INC.1-4
-	522A6-80301		WHEEL-ASSY,FRONT	ﾌﾛﾝﾄﾎｲｰﾙｱｯｾﾝ	4	[TUWW] INC.1-4
-	522A6-80311		WHEEL-ASSY,FRONT	ﾌﾛﾝﾄﾎｲｰﾙｱｯｾﾝ	4	[TUGW] INC.1-4
1	06806-55015		TIRE,UNIQUE,550-15	ﾀｲﾔ	4	[TUJW]
-	06851-55015		TIRE,SOFTONE,550-15	ﾀｲﾔ	4	[TUSW]
-	06841-55015		TIRE,WHITE,550-15	ﾀｲﾔ	4	[TUWW]
-	06843-55015		TIRE,GREEN,550-15	ﾀｲﾔ	4	[TUGW]
A2	53656-82001		RIM-ASSY,450E-15	ﾘﾑｱｯｾﾝ	4	[TUJW][TUSW][TUWW][TUGW] INC.2-4
2	NO PART NO.	#	RIM	ﾘﾑ	4	[TUJW][TUSW][TUWW][TUGW]
3	53456-82052		RING,SIDE	ﾘﾝｸﾞ	4	[TUJW][TUSW][TUWW][TUGW]
4	53456-82062		RING,LOCK	ﾘﾝｸﾞ	4	[TUJW][TUSW][TUWW][TUGW]

FIG.88 FRONT WHEEL [TJ W70][TJSW70][T W70][TS W70]

(F7Z244D0) フロントホイール

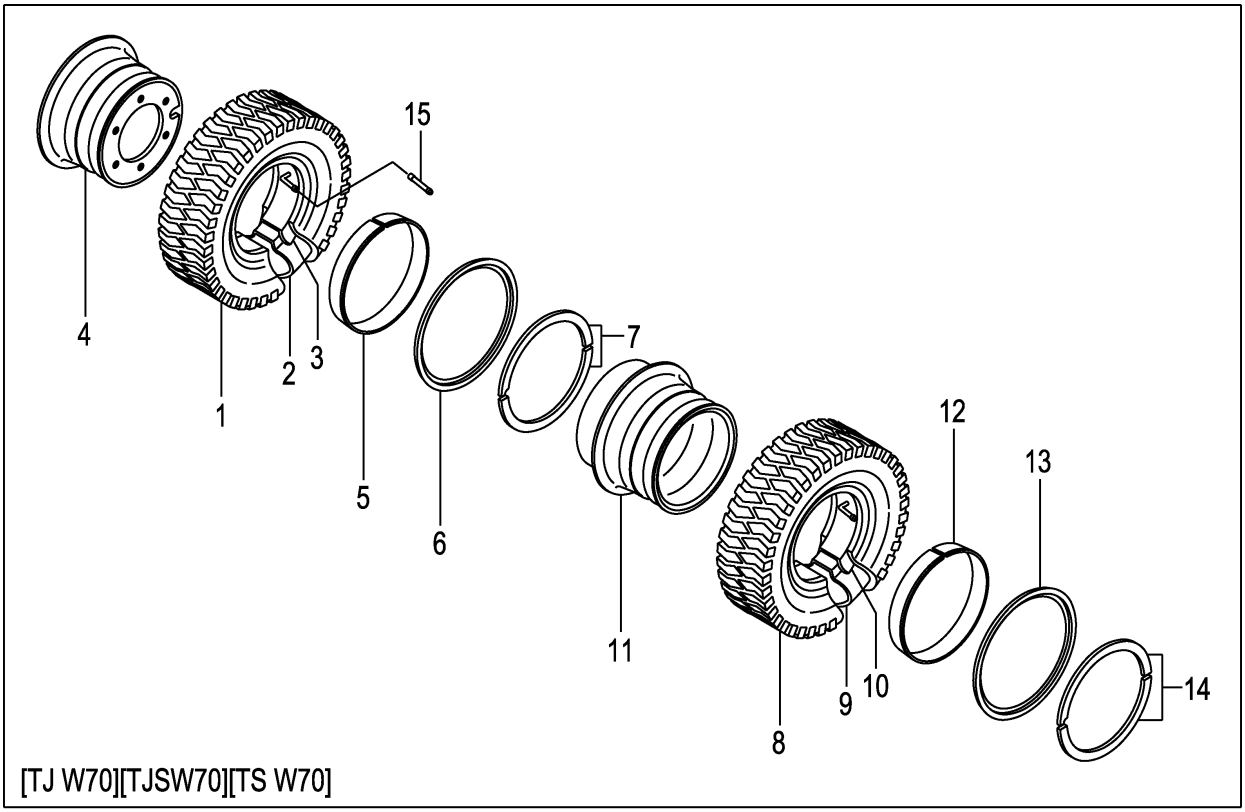

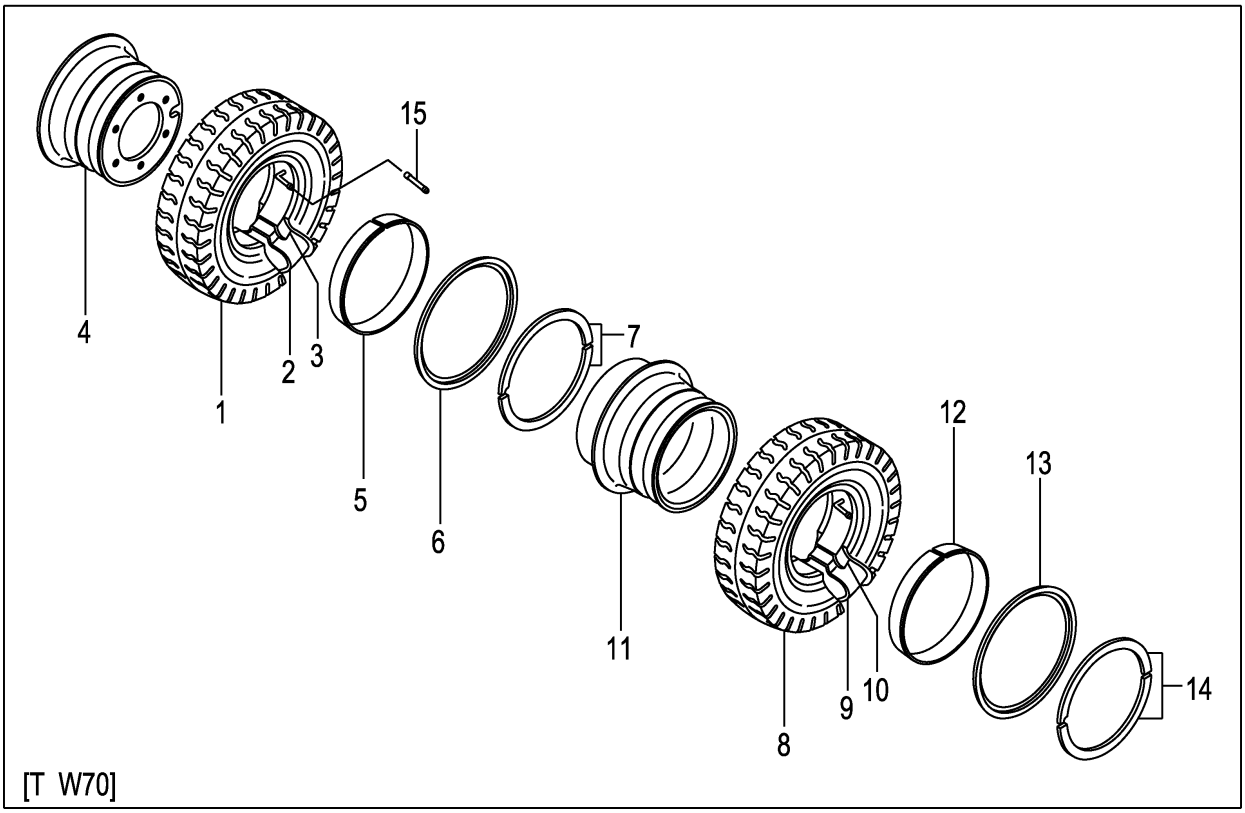

A:FD20C3Z FD20T3Z FD25C3Z FD25T3Z

Item No	Part No.	Mark	Description		Req'd	Remarks : Serial No.
A1	53656-80601		WHEEL-ASSY,FRONT	ﾌﾛﾝﾄﾎｲｰﾙｱｯｾﾝ	2	[TJ W70] INC.1-7
-	53656-80501		WHEEL-ASSY,FRONT	ﾌﾛﾝﾄﾎｲｰﾙｱｯｾﾝ	2	[TJSW70] INC.1-7
-	53656-80201		WHEEL-ASSY,FRONT	ﾌﾛﾝﾄﾎｲｰﾙｱｯｾﾝ	2	[T W70] INC.1-7
-	53656-80701		WHEEL-ASSY,FRONT	ﾌﾛﾝﾄﾎｲｰﾙｱｯｾﾝ	2	[TS W70] INC.1-7
1	06006-70012		TIRE,700-12-12	ﾀｲﾔ	2	[TJ W70]
-	06005-70012		TIRE,700-12-12	ﾀｲﾔ	2	[TJSW70]
-	06001-70012		TIRE,700-12-12	ﾀｲﾔ	2	[T W70]
-	06007-70012		TIRE,700-12-12	ﾀｲﾔ	2	[TS W70]
2	06711-70012		TUBE,700-12-12T	ﾁｭｰﾌﾞ	2	[TJ W70][TJSW70][T W70] [TS W70]
3	06701-70012		FLAP,700-12-12F	ﾌﾗｯﾌﾟ	2	[TJ W70][TJSW70][T W70] [TS W70]
A2	53656-80901		RIM-ASSY,500S-12TD	ﾘﾑｱｯｾﾝ	2	[TJ W70][TJSW70][T W70] [TS W70] INC.4-7
4	NO PART NO.	#	RIM	ﾘﾑ	2	[TJ W70][TJSW70][T W70] [TS W70]
5	53656-82041		BAND	ﾊﾞﾝﾄﾞ	2	[TJ W70][TJSW70][T W70] [TS W70]
6	53656-82051		FLANGE,SIDE	ﾌﾗﾝｼﾞ	2	[TJ W70][TJSW70][T W70] [TS W70]
7	53656-82061		RING,LOCK	ﾘﾝｸﾞ	2	[TJ W70][TJSW70][T W70] [TS W70]
A3	53656-80611		WHEEL-ASSY,FRONT	ﾌﾛﾝﾄﾎｲｰﾙｱｯｾﾝ	2	[TJ W70] INC.8-14
-	53656-80511		WHEEL-ASSY,FRONT	ﾌﾛﾝﾄﾎｲｰﾙｱｯｾﾝ	2	[TJSW70] INC.8-14
-	53656-80211		WHEEL-ASSY,FRONT	ﾌﾛﾝﾄﾎｲｰﾙｱｯｾﾝ	2	[T W70] INC.8-14
-	53656-80711		WHEEL-ASSY,FRONT	ﾌﾛﾝﾄﾎｲｰﾙｱｯｾﾝ	2	[TS W70] INC.8-14
8	06006-70012		TIRE,700-12-12	ﾀｲﾔ	2	[TJ W70]
-	06005-70012		TIRE,700-12-12	ﾀｲﾔ	2	[TJSW70]
-	06001-70012		TIRE,700-12-12	ﾀｲﾔ	2	[T W70]
-	06007-70012		TIRE,700-12-12	ﾀｲﾔ	2	[TS W70]
9	06711-70012		TUBE,700-12-12T	ﾁｭｰﾌﾞ	2	[TJ W70][TJSW70][T W70] [TS W70]
10	06701-70012		FLAP,700-12-12F	ﾌﾗｯﾌﾟ	2	[TJ W70][TJSW70][T W70] [TS W70]
A4	53656-80911		RIM-ASSY,500S-12TD	ﾘﾑｱｯｾﾝ	2	[TJ W70][TJSW70][T W70] [TS W70] INC.11-14
11	NO PART NO.	#	RIM	ﾘﾑ	2	[TJ W70][TJSW70][T W70] [TS W70]
12	53656-82041		BAND	ﾊﾞﾝﾄﾞ	2	[TJ W70][TJSW70][T W70] [TS W70]
13	53656-82051		FLANGE,SIDE	ﾌﾗﾝｼﾞ	2	[TJ W70][TJSW70][T W70] [TS W70]
14	53656-82061		RING,LOCK	ﾘﾝｸﾞ	2	[TJ W70][TJSW70][T W70] [TS W70]
15	06731-00120		TUBE,EXTENSION	ﾁｭｰﾌﾞ	2	[TJ W70][TJSW70][T W70] [TS W70]

FIG.89 FRONT WHEEL [TUJW70][TUSW70][TUWW70][TUGW70]

(F7Z244E0) フロントホイール

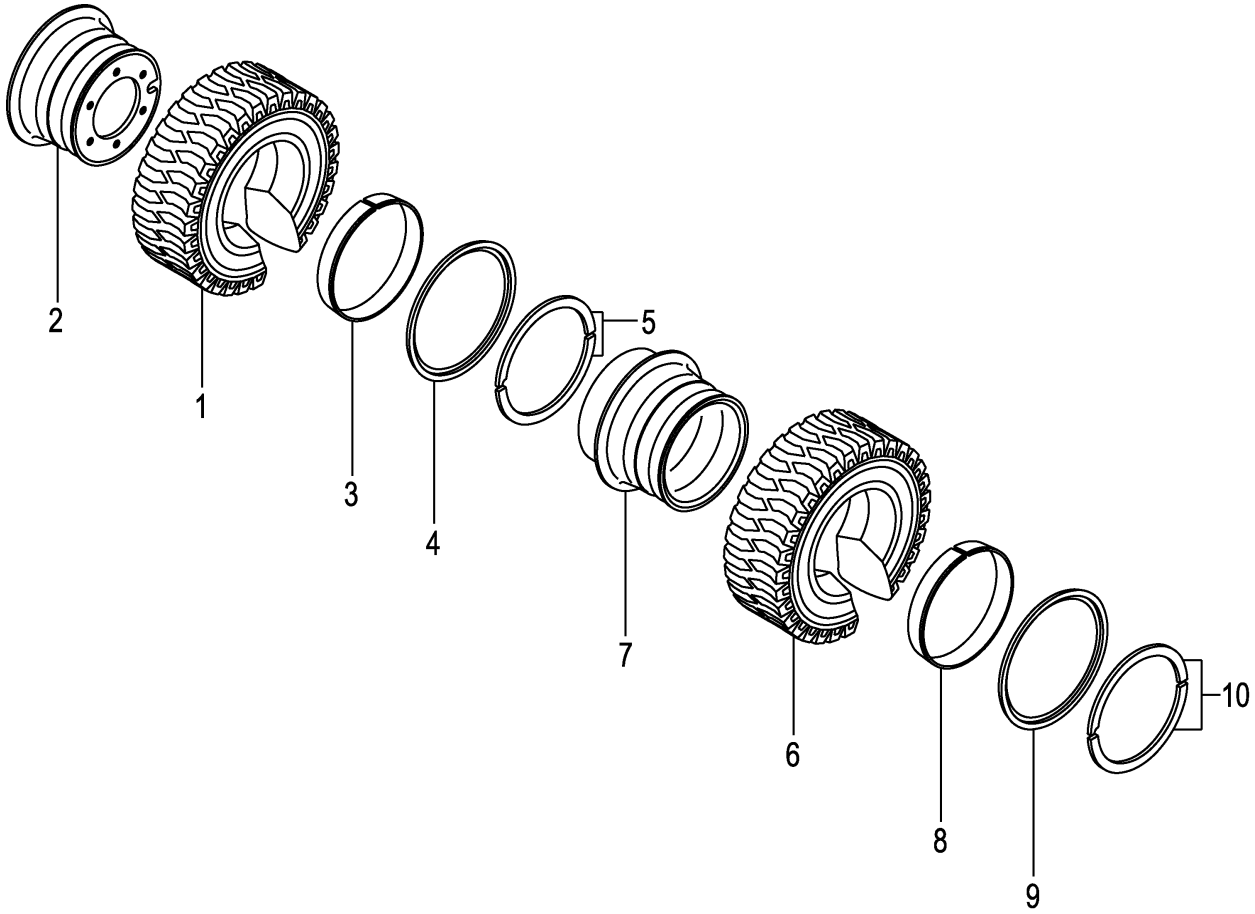

A:FD20C3Z FD20T3Z FD25C3Z FD25T3Z

Item No	Part No.	Mark	Description		Req'd	Remarks : Serial No.
A1	53656-80401		WHEEL-ASSY,FRONT	ﾌﾛﾝﾄﾎｲｰﾙｱｯｾﾝ	2	[TUJW70] INC.1-5
-	522A6-80441		WHEEL-ASSY,FRONT	ﾌﾛﾝﾄﾎｲｰﾙｱｯｾﾝ	2	[TUSW70] INC.1-5
-	522A6-80401		WHEEL-ASSY,FRONT	ﾌﾛﾝﾄﾎｲｰﾙｱｯｾﾝ	2	[TUWW70] INC.1-5
-	522A6-80421		WHEEL-ASSY,FRONT	ﾌﾛﾝﾄﾎｲｰﾙｱｯｾﾝ	2	[TUGW70] INC.1-5
1	06806-70012		TIRE,UNIQUE,700-12	ﾀｲﾔ	2	[TUJW70]
-	06851-70012		TIRE,SOFTONE,700-12	ﾀｲﾔ	2	[TUSW70]
-	06841-70012		TIRE,WHITE,700-12	ﾀｲﾔ	2	[TUWW70]
-	06843-70012		TIRE,GREEN,700-12	ﾀｲﾔ	2	[TUGW70]
A2	53656-80901		RIM-ASSY,500S-12TD	ﾘﾑｱｯｾﾝ	2	[TUJW70][TUSW70][TUWW70] [TUGW70] INC.2-5
2	NO PART NO.	#	RIM	ﾘﾑ	2	[TUJW70][TUSW70][TUWW70] [TUGW70]
3	53656-82041		BAND	ﾊﾞﾝﾄﾞ	2	[TUJW70][TUSW70][TUWW70] [TUGW70]
4	53656-82051		FLANGE,SIDE	ﾌﾗﾝｼﾞ	2	[TUJW70][TUSW70][TUWW70] [TUGW70]
5	53656-82061		RING,LOCK	ﾘﾝｸﾞ	2	[TUJW70][TUSW70][TUWW70] [TUGW70]
A3	53656-80411		WHEEL-ASSY,FRONT	ﾌﾛﾝﾄﾎｲｰﾙｱｯｾﾝ	2	[TUJW70] INC.6-10
-	522A6-80451		WHEEL-ASSY,FRONT	ﾌﾛﾝﾄﾎｲｰﾙｱｯｾﾝ	2	[TUSW70] INC.6-10
-	522A6-80411		WHEEL-ASSY,FRONT	ﾌﾛﾝﾄﾎｲｰﾙｱｯｾﾝ	2	[TUWW70] INC.6-10
-	522A6-80431		WHEEL-ASSY,FRONT	ﾌﾛﾝﾄﾎｲｰﾙｱｯｾﾝ	2	[TUGW70] INC.6-10
6	06806-70012		TIRE,UNIQUE,700-12	ﾀｲﾔ	2	[TUJW70]
-	06851-70012		TIRE,SOFTONE,700-12	ﾀｲﾔ	2	[TUSW70]
-	06841-70012		TIRE,WHITE,700-12	ﾀｲﾔ	2	[TUWW70]
-	06843-70012		TIRE,GREEN,700-12	ﾀｲﾔ	2	[TUGW70]
A4	53656-80911		RIM-ASSY,500S-12TD	ﾘﾑｱｯｾﾝ	2	[TUJW70][TUSW70][TUWW70] [TUGW70] INC.7-10
7	NO PART NO.	#	RIM	ﾘﾑ	2	[TUJW70][TUSW70][TUWW70] [TUGW70]
8	53656-82041		BAND	ﾊﾞﾝﾄﾞ	2	[TUJW70][TUSW70][TUWW70] [TUGW70]
9	53656-82051		FLANGE,SIDE	ﾌﾗﾝｼﾞ	2	[TUJW70][TUSW70][TUWW70] [TUGW70]
10	53656-82061		RING,LOCK	ﾘﾝｸﾞ	2	[TUJW70][TUSW70][TUWW70] [TUGW70]

FIG.90 REAR WHEEL

(F7Z244F0) リヤーホイール

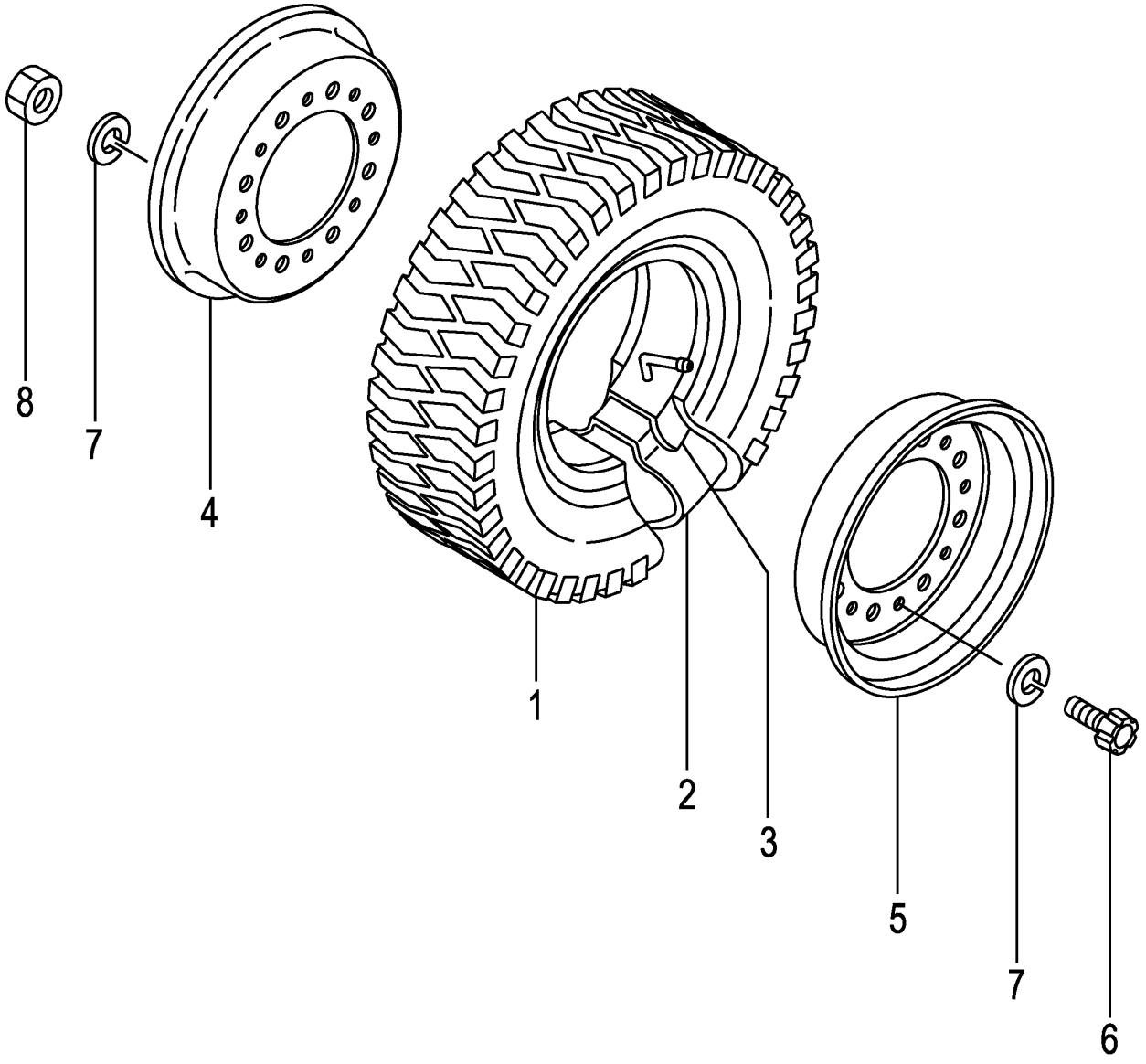

A:FD20C3Z FD20T3Z FD25C3Z FD25T3Z

Item No	Part No.	Mark	Description		Req'd	Remarks : Serial No.
A1	53656-81501		WHEEL-ASSY,REAR	ﾘﾔｰﾎｲｰﾙｱｯｾﾝ	2	INC.1-8
1	06006-60009		TIRE,600-9-10	ﾀｲﾔ	2	
2	06712-60009		TUBE,600-9-10T	ﾁｭｰﾌﾞ	2	
3	06702-60009		FLAP,600-9-10F	ﾌﾗｯﾌﾟ	2	
A2	23654-40501		RIM-ASSY,400E-9	ﾘﾑｱｯｾﾝ	2	INC.4-8
4	NO PART NO.	#	RIM,INSIDE	ﾘﾑ	2	
5	NO PART NO.	#	RIM,OUTSIDE	ﾘﾑ	2	
6	534F3-82001		BOLT	ﾎﾞﾙﾄ	16	
7	02011-00012		WASHER	ﾜｯｼｬ	32	
8	01400-00012		NUT	ﾅｯﾄ	16	

FIG.91 REAR WHEEL [DR R]

(F7Z244G0) リヤーホイール

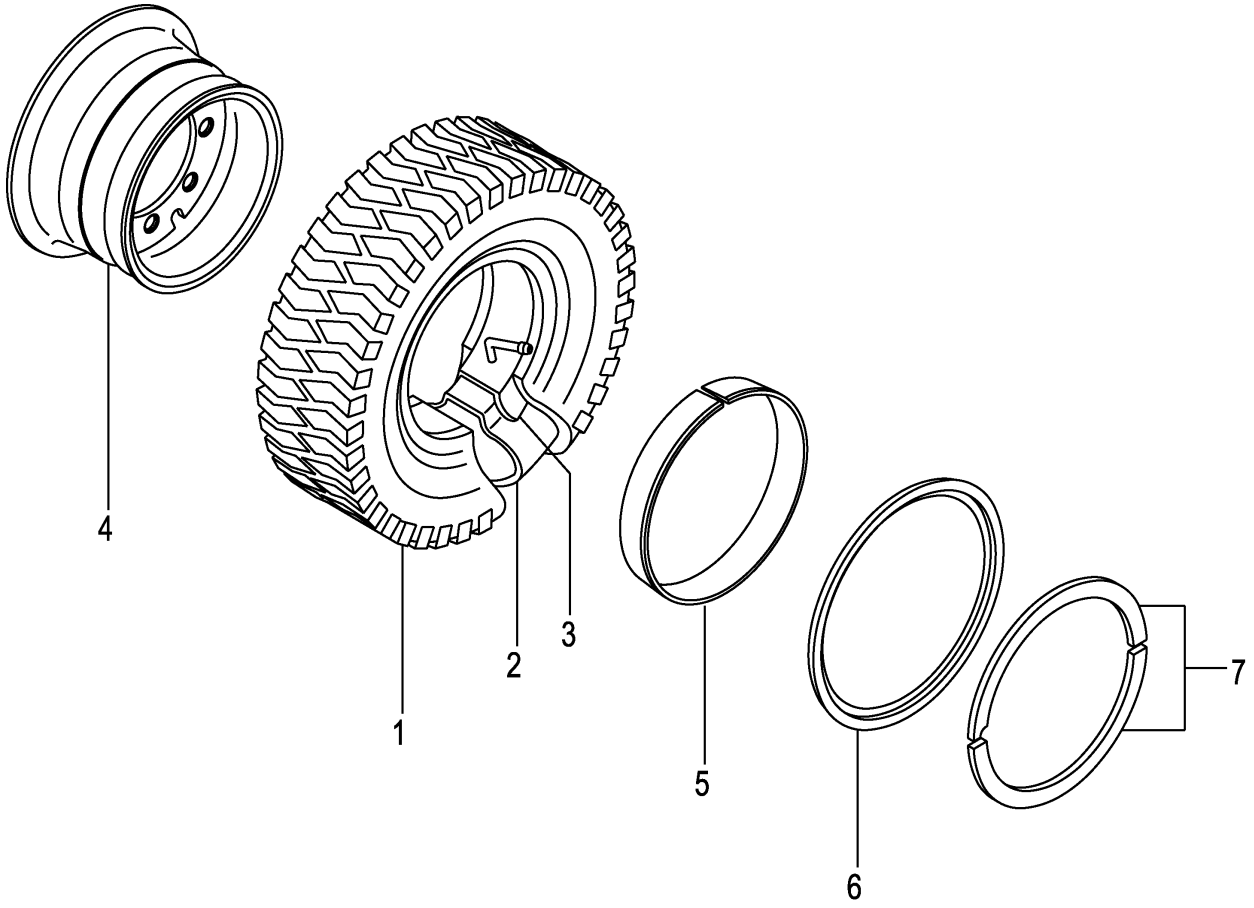

A:FD20C3Z FD20T3Z FD25C3Z FD25T3Z

Item No	Part No.	Mark	Description		Req'd	Remarks : Serial No.
A1	53666-81501		WHEEL-ASSY,REAR	ﾘﾔｰﾎｲｰﾙｱｯｾﾝ	2	[DR R] INC.1-7
1	06006-60009		TIRE,600-9-10	ﾀｲﾔ	2	[DR R]
2	06712-60009		TUBE,600-9-10T	ﾁｭｰﾌﾞ	2	[DR R]
3	06702-60009		FLAP,600-9-10F	ﾌﾗｯﾌﾟ	2	[DR R]
A2	53666-81901		RIM-ASSY,400E-9	ﾘﾑｱｯｾﾝ	2	[DR R] INC.4-7
4	NO PART NO.	#	RIM	ﾘﾑ	2	[DR R]
5	53666-82021		BAND	ﾊﾞﾝﾄﾞ	2	[DR R]
6	53666-82031		FLANGE,SIDE	ﾌﾗﾝｼﾞ	2	[DR R]
7	53666-82041		RING,LOCK	ﾘﾝｸﾞ	2	[DR R]

FIG.92 REAR WHEEL [TJ R][TJSR][T R][TS R]

(F7Z244H0) リヤーホイール

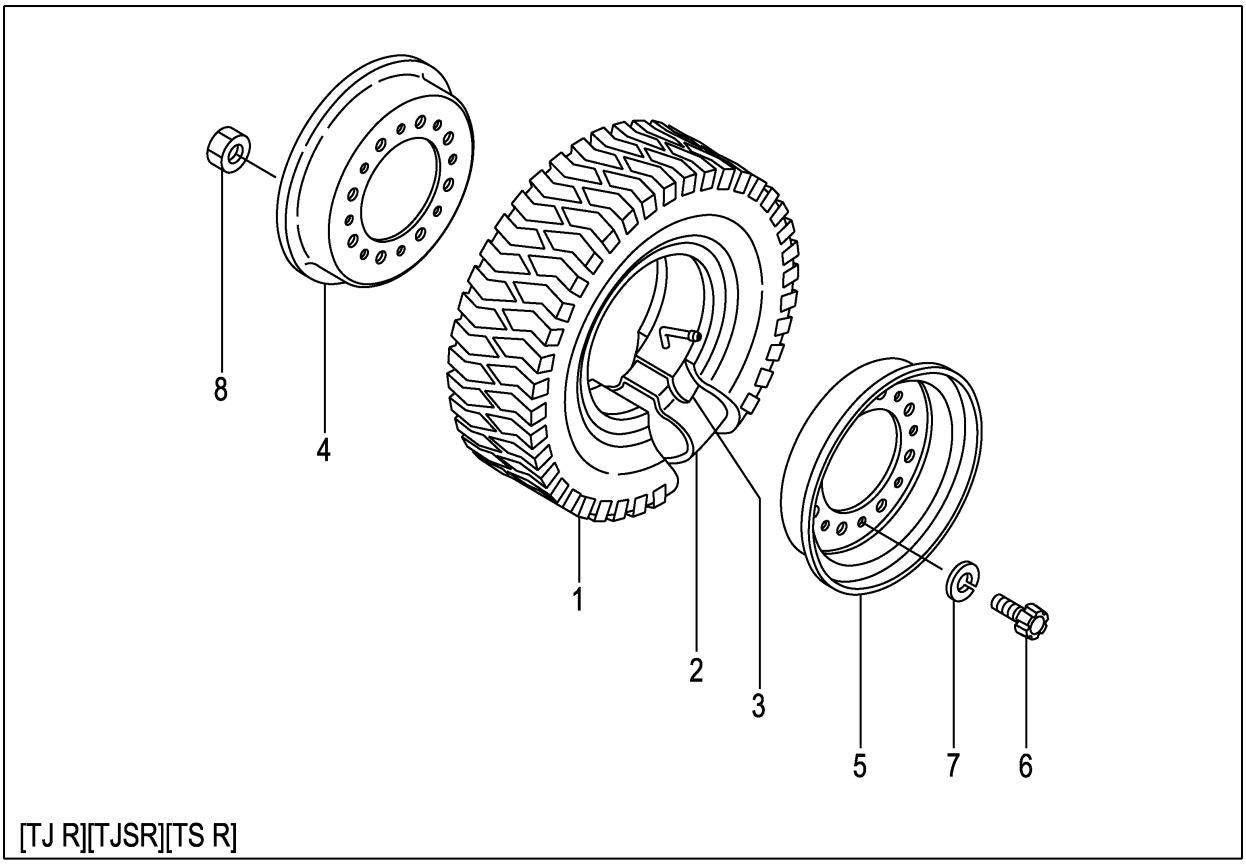

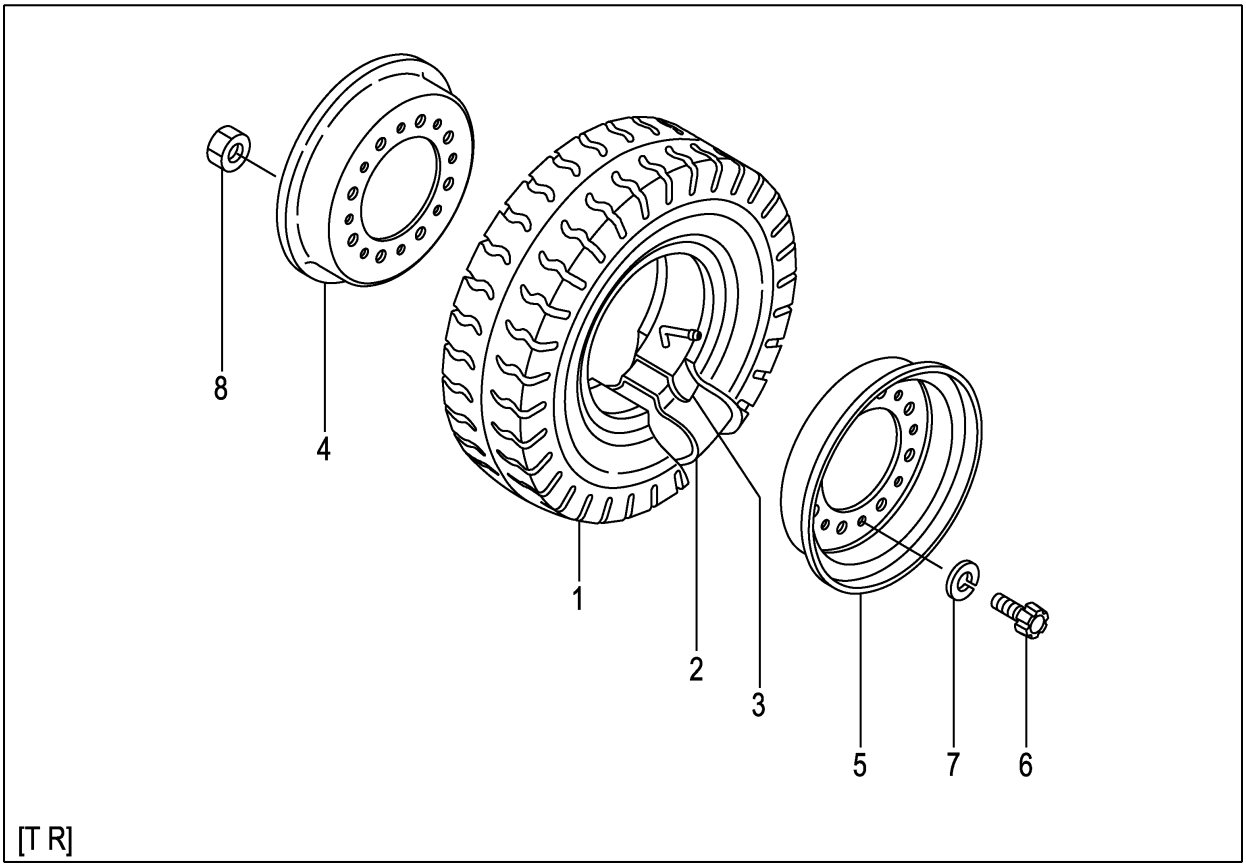

FIG.92
(F7Z244H0)

A:FD20C3Z FD20T3Z FD25C3Z FD25T3Z

Item No	Part No.	Mark	Description		Req'd	Remarks : Serial No.
A1	53656-81501		WHEEL-ASSY,REAR	ﾘﾔｰﾎｲｰﾙｱｯｾﾝ	2	[TJ R] INC.1-8
-	53656-81401		WHEEL-ASSY,REAR	ﾘﾔｰﾎｲｰﾙｱｯｾﾝ	2	[TJSR] INC.1-8
-	23654-40511		WHEEL-ASSY,REAR	ﾘﾔｰﾎｲｰﾙｱｯｾﾝ	2	[T R] INC.1-8
-	53656-81601		WHEEL-ASSY,REAR	ﾘﾔｰﾎｲｰﾙｱｯｾﾝ	2	[TS R] INC.1-8
1	06006-60009		TIRE,600-9-10	ﾀｲﾔ	2	[TJ R]
-	06005-60009		TIRE,600-9-10	ﾀｲﾔ	2	[TJSR]
-	06001-60009		TIRE,600-9-10	ﾀｲﾔ	2	[T R]
-	06007-60009		TIRE,600-9-10	ﾀｲﾔ	2	[TS R]
2	06712-60009		TUBE,600-9-10T	ﾁｭｰﾌﾞ	2	[TJ R][TJSR][T R][TS R]
3	06702-60009		FLAP,600-9-10F	ﾌﾗｯﾌﾟ	2	[TJ R][TJSR][T R][TS R]
A2	23654-40501		RIM-ASSY,400E-9	ﾘﾑｱｯｾﾝ	2	[TJ R][TJSR][T R][TS R] INC.4-8
4	NO PART NO.	#	RIM,INSIDE	ﾘﾑ	2	[TJ R][TJSR][T R][TS R]
5	NO PART NO.	#	RIM,OUTSIDE	ﾘﾑ	2	[TJ R][TJSR][T R][TS R]
6	534F3-82001		BOLT	ﾎﾞﾙﾄ	16	[TJ R][TJSR][T R][TS R]
7	02011-00012		WASHER	ﾜｯｼｬ	32	[TJ R][TJSR][T R][TS R]
8	01400-00012		NUT	ﾅｯﾄ	16	[TJ R][TJSR][T R][TS R]

FIG.93 REAR WHEEL [(TJ R,TJSR,T R,TS R)/DR R]

(F7Z244J0) リヤーホイール

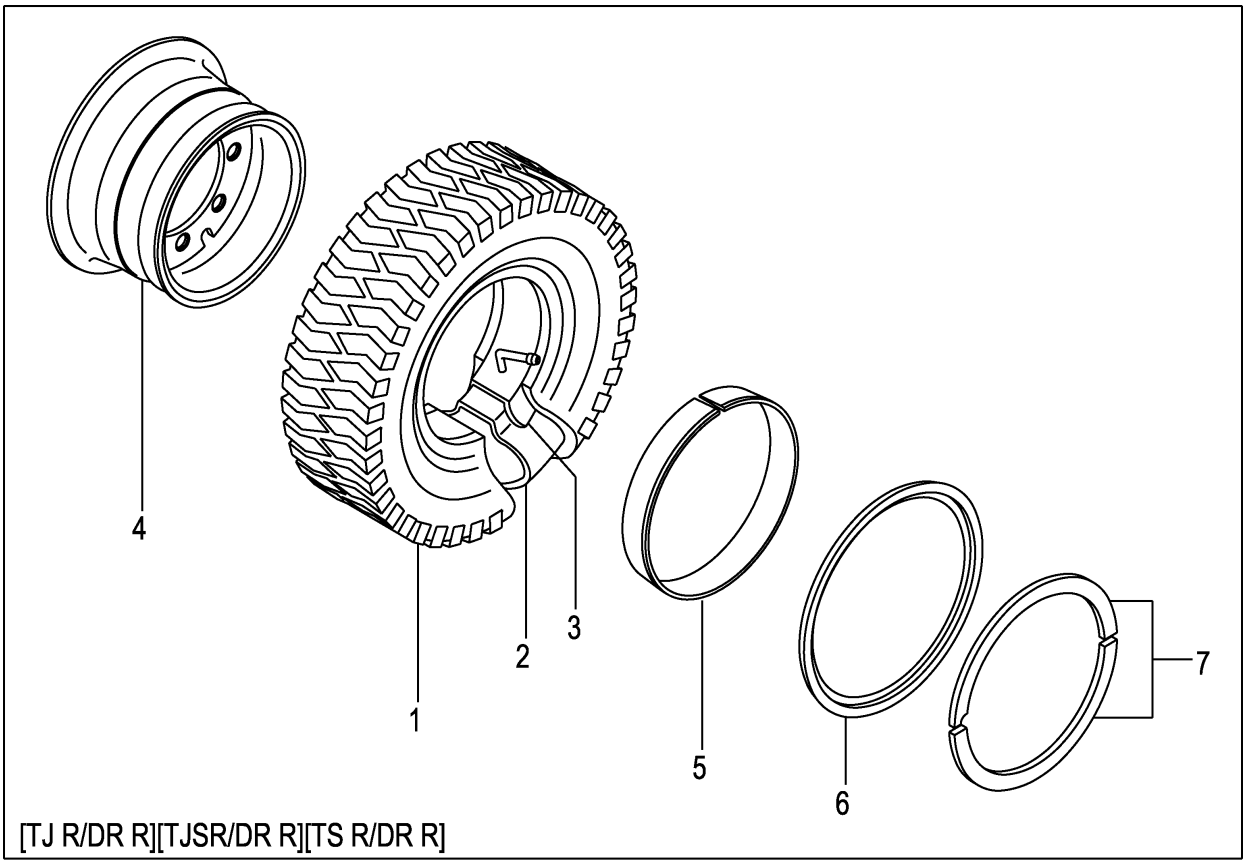

[TJ R/DR R][TJSR/DR R][TS R/DR R]

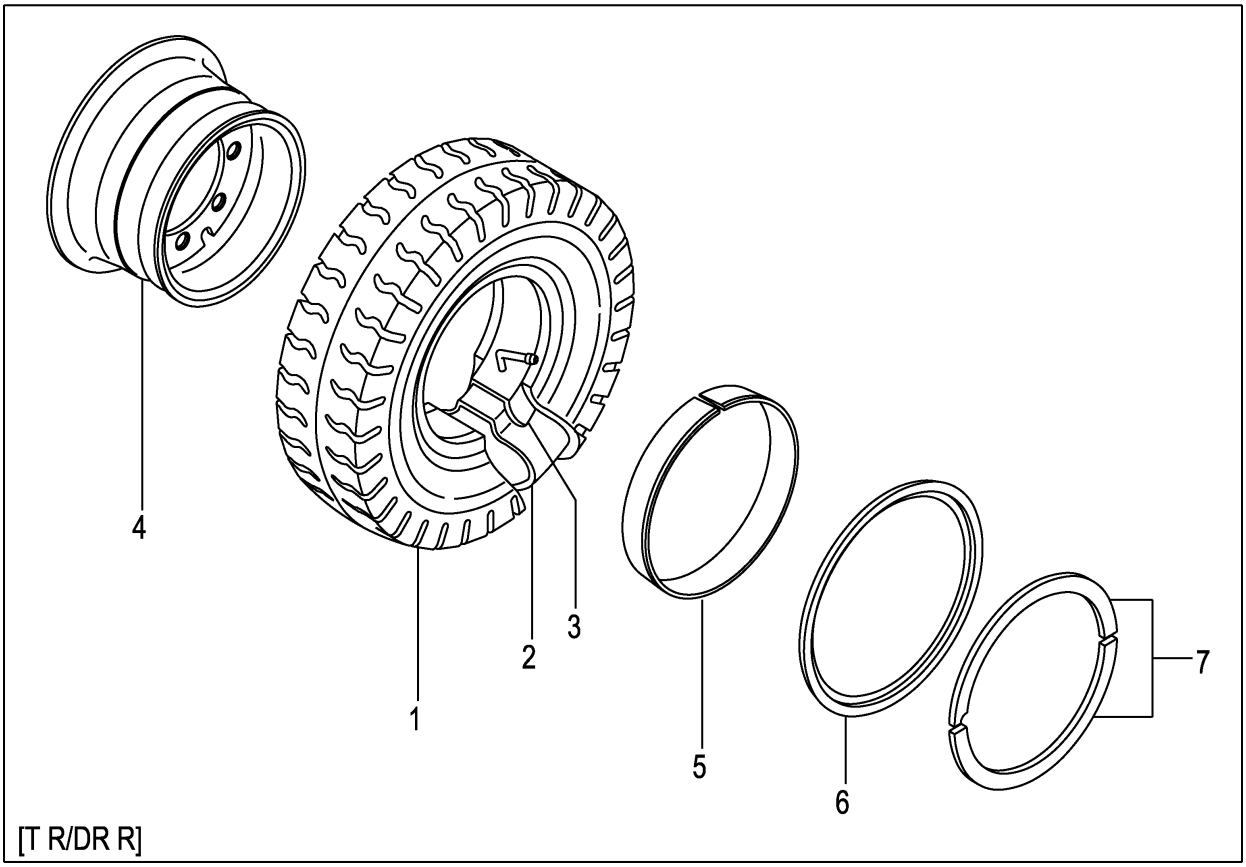

[T R/DR R]

A:FD20C3Z FD20T3Z FD25C3Z FD25T3Z

Item No	Part No.	Mark	Description		Req'd	Remarks : Serial No.
A1	53666-81501		WHEEL-ASSY,REAR	ﾘﾔｰﾎｲｰﾙｱｯｾﾝ	2	[TJ R/DR R] INC.1-7
-	53666-81401		WHEEL-ASSY,REAR	ﾘﾔｰﾎｲｰﾙｱｯｾﾝ	2	[TJSR/DR R] INC.1-7
-	53666-80901		WHEEL-ASSY,REAR	ﾘﾔｰﾎｲｰﾙｱｯｾﾝ	2	[T R/DR R] INC.1-7
-	53666-81601		WHEEL-ASSY,REAR	ﾘﾔｰﾎｲｰﾙｱｯｾﾝ	2	[TS R/DR R] INC.1-7
1	06006-60009		TIRE,600-9-10	ﾀｲﾔ	2	[TJ R/DR R]
-	06005-60009		TIRE,600-9-10	ﾀｲﾔ	2	[TJSR/DR R]
-	06001-60009		TIRE,600-9-10	ﾀｲﾔ	2	[T R/DR R]
-	06007-60009		TIRE,600-9-10	ﾀｲﾔ	2	[TS R/DR R]
2	06712-60009		TUBE,600-9-10T	ﾁｭｰﾌﾞ	2	[TJ R/DR R][TJSR/DR R]
						[T R/DR R][TS R/DR R]
3	06702-60009		FLAP,600-9-10F	ﾌﾗｯﾌﾟ	2	[TJ R/DR R][TJSR/DR R]
						[T R/DR R][TS R/DR R]
A2	53666-81901		RIM-ASSY,400E-9	ﾘﾑｱｯｾﾝ	2	[TJ R/DR R][TJSR/DR R] INC.4-7
-	53666-81901		RIM-ASSY,400E-9	ﾘﾑｱｯｾﾝ	2	[T R/DR R][TS R/DR R] INC.4-7
4	NO PART NO.	#	RIM	ﾘﾑ	2	[TJ R/DR R][TJSR/DR R]
						[T R/DR R][TS R/DR R]
5	53666-82021		BAND	ﾊﾞﾝﾄﾞ	2	[TJ R/DR R][TJSR/DR R]
						[T R/DR R][TS R/DR R]
6	53666-82031		FLANGE,SIDE	ﾌﾗﾝｼﾞ	2	[TJ R/DR R][TJSR/DR R]
						[T R/DR R][TS R/DR R]
7	53666-82041		RING,LOCK	ﾘﾝｸﾞ	2	[TJ R/DR R][TJSR/DR R]
						[T R/DR R][TS R/DR R]

FIG.94 REAR WHEEL [TSUR][TUJR][TUSR][TUWR][TUGR]

(F7Z244K0) リヤーホイール

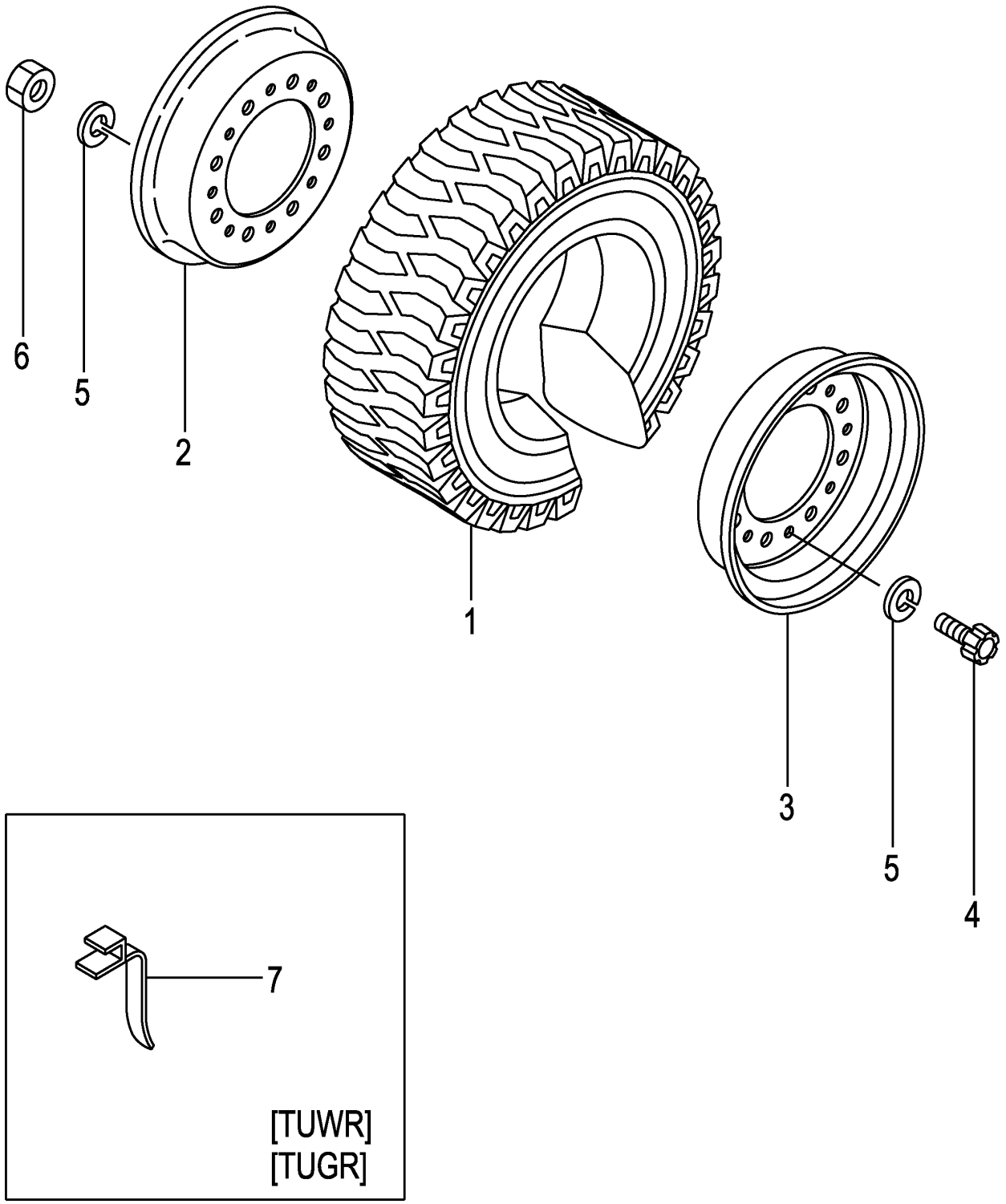

A:FD20C3Z FD20T3Z FD25C3Z FD25T3Z

Item No	Part No.	Mark	Description		Req'd	Remarks : Serial No.
A1	539A6-80301		WHEEL-ASSY,REAR	ﾘﾔｰﾎｲｰﾙｱｯｾﾝ	2	[TSUR] INC.1-6
-	53656-81301		WHEEL-ASSY,REAR	ﾘﾔｰﾎｲｰﾙｱｯｾﾝ	2	[TUJR] INC.1-6
-	53656-81301		WHEEL-ASSY,REAR	ﾘﾔｰﾎｲｰﾙｱｯｾﾝ	2	[TUJR] INC.1-6
-	522A3-80451		WHEEL-ASSY,REAR	ﾘﾔｰﾎｲｰﾙｱｯｾﾝ	2	[TUJR] INC.1-6
-	522A3-80451		WHEEL-ASSY,REAR	ﾘﾔｰﾎｲｰﾙｱｯｾﾝ	2	[TUJR/EX] INC.1-6
-	522A6-80521		WHEEL-ASSY,REAR	ﾘﾔｰﾎｲｰﾙｱｯｾﾝ	2	[TUSR] INC.1-6
-	522A6-80501		WHEEL-ASSY,REAR	ﾘﾔｰﾎｲｰﾙｱｯｾﾝ	2	[TUWR] INC.1-6
-	522A6-80511		WHEEL-ASSY,REAR	ﾘﾔｰﾎｲｰﾙｱｯｾﾝ	2	[TUGR] INC.1-6
1	06807-60009		TIRE,UNIQUE,600-9	ﾀｲﾔ	2	[TSUR]
-	06806-60009		TIRE,UNIQUE,600-9	ﾀｲﾔ	2	[TUJR]
-	06806-60009		TIRE,UNIQUE,600-9	ﾀｲﾔ	2	[TUJR]
-	06807-60009		TIRE,UNIQUE,600-9	ﾀｲﾔ	2	[TUJR]
-	06807-60009		TIRE,UNIQUE,600-9	ﾀｲﾔ	2	[TUJR/EX]
-	06851-60009		TIRE,SOFTONE,600-9	ﾀｲﾔ	2	[TUSR]
-	06841-60009		TIRE,WHITE,600-9	ﾀｲﾔ	2	[TUWR]
-	06843-60009		TIRE,GREEN,600-9	ﾀｲﾔ	2	[TUGR]
A2	23654-40501		RIM-ASSY,400E-9	ﾘﾑｱｯｾﾝ	2	[TSUR][TUJR][TUSR][TUWR] [TUGR] INC.2-6
2	NO PART NO.	#	RIM,INSIDE	ﾘﾑ	2	[TSUR][TUJR][TUSR][TUWR] [TUGR]
3	NO PART NO.	#	RIM,OUTSIDE	ﾘﾑ	2	[TSUR][TUJR][TUSR][TUWR] [TUGR]
4	534F3-82001		BOLT	ﾎﾞﾙﾄ	16	[TSUR][TUJR][TUSR][TUWR] [TUGR]
5	02011-00012		WASHER	ﾜｯｼｬ	32	[TSUR][TUJR][TUSR][TUWR] [TUGR]
6	01400-00012		NUT	ﾅｯﾄ	16	[TSUR][TUJR][TUSR][TUWR] [TUGR]
7	571A6-82081		BELT,EARTH	ﾍﾞﾙﾄ	1	[TUWR][TUGR]

FIG.95 REAR WHEEL [TUJR/DR R]

(F7Z244L0) リヤーホイール

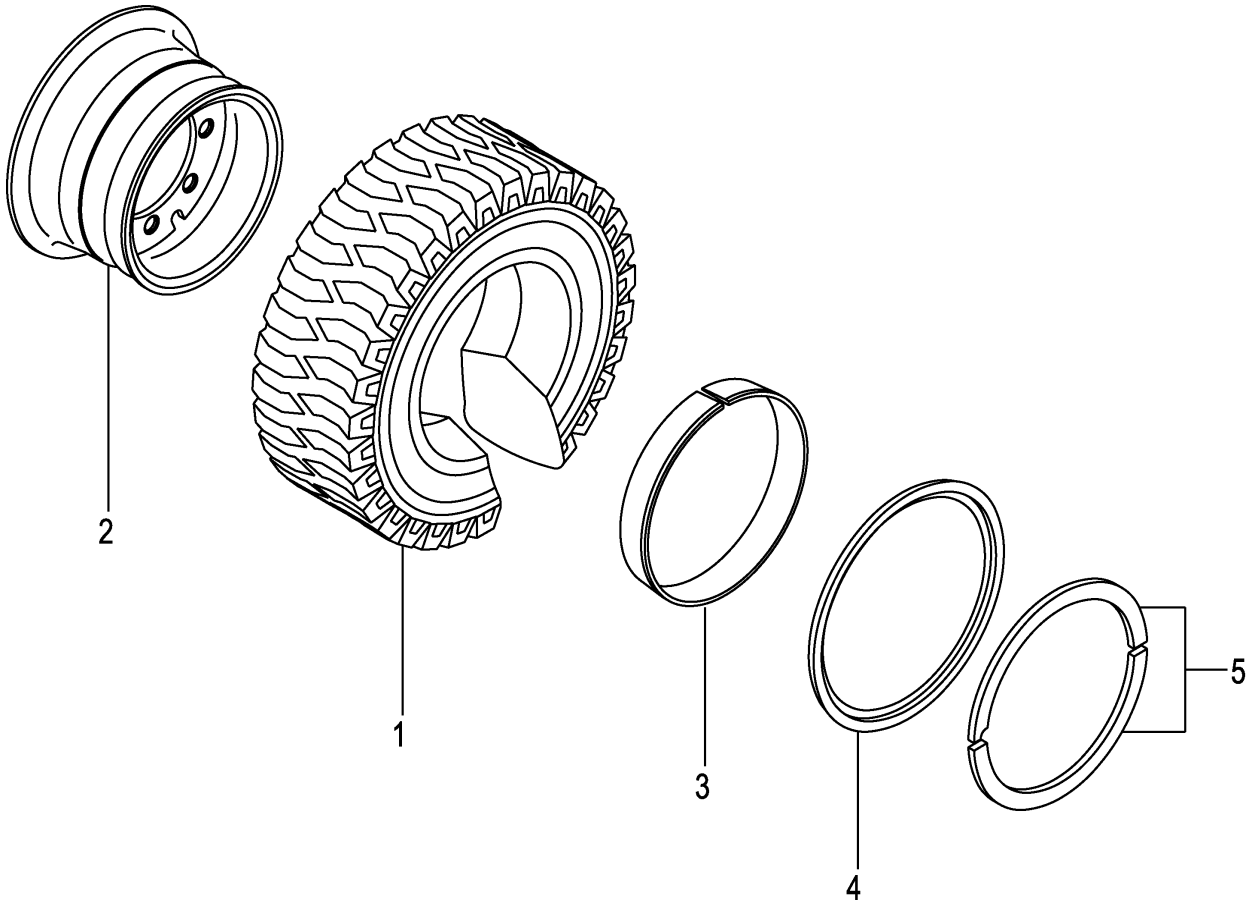

A:FD20C3Z FD20T3Z FD25C3Z FD25T3Z

Item No	Part No.	Mark	Description		Req'd	Remarks : Serial No.
A1	53666-81301		WHEEL-ASSY,REAR	ﾘﾔｰﾎｲｰﾙｱｯｾﾝ	2	[TUJR/DR R] INC.1-5
1	06806-60009		TIRE,UNIQUE,600-9	ﾀｲﾔ	2	[TUJR/DR R]
A2	53666-81901		RIM-ASSY,400E-9	ﾘﾑｱｯｾﾝ	2	[TUJR/DR R] INC.2-5
2	NO PART NO.	#	RIM	ﾘﾑ	2	[TUJR/DR R]
3	53666-82021		BAND	ﾊﾞﾝﾄﾞ	2	[TUJR/DR R]
4	53666-82031		FLANGE,SIDE	ﾌﾗﾝｼﾞ	2	[TUJR/DR R]
5	53666-82041		RING,LOCK	ﾘﾝｸﾞ	2	[TUJR/DR R]

FIG.96 REAR WHEEL [TRAR]

(F7Z244M0) リヤーホイール

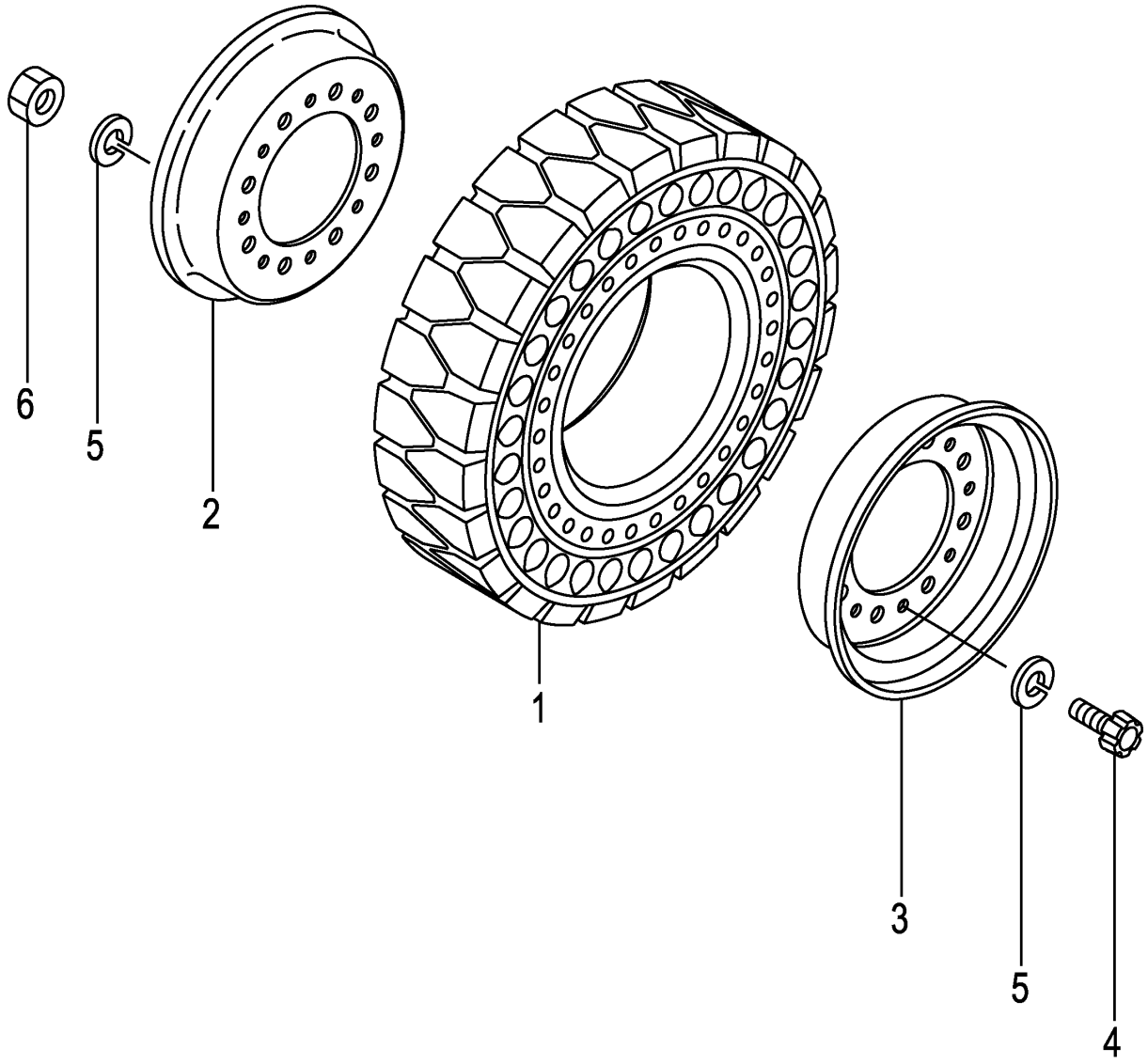

FIG.96

(F7Z244M0)

A:FD20C3Z FD20T3Z FD25C3Z FD25T3Z

Item No	Part No.	Mark	Description		Req'd	Remarks : Serial No.
A1	534A6-80271		WHEEL-ASSY,REAR	ﾘﾔｰﾎｲｰﾙｱｯｾﾝ	2	[TRAR] INC.1-6
1	534A6-85001		TIRE,AIR-BOSS,600-9	ﾀｲﾔ	2	[TRAR]
A2	23654-40501		RIM-ASSY,400E-9	ﾘﾑｱｯｾﾝ	2	[TRAR] INC.2-6
2	NO PART NO.	#	RIM,INSIDE	ﾘﾑ	2	[TRAR]
3	NO PART NO.	#	RIM,OUTSIDE	ﾘﾑ	2	[TRAR]
4	534F3-82001		BOLT	ﾎﾞﾙﾄ	16	[TRAR]
5	02011-00012		WASHER	ﾜｯｼｬ	32	[TRAR]
6	01400-00012		NUT	ﾅｯﾄ	16	[TRAR]

FIG.97 POWER CYLINDER

(F7Z24510) ﾊﾟﾜｰｼﾘﾝﾀﾞ

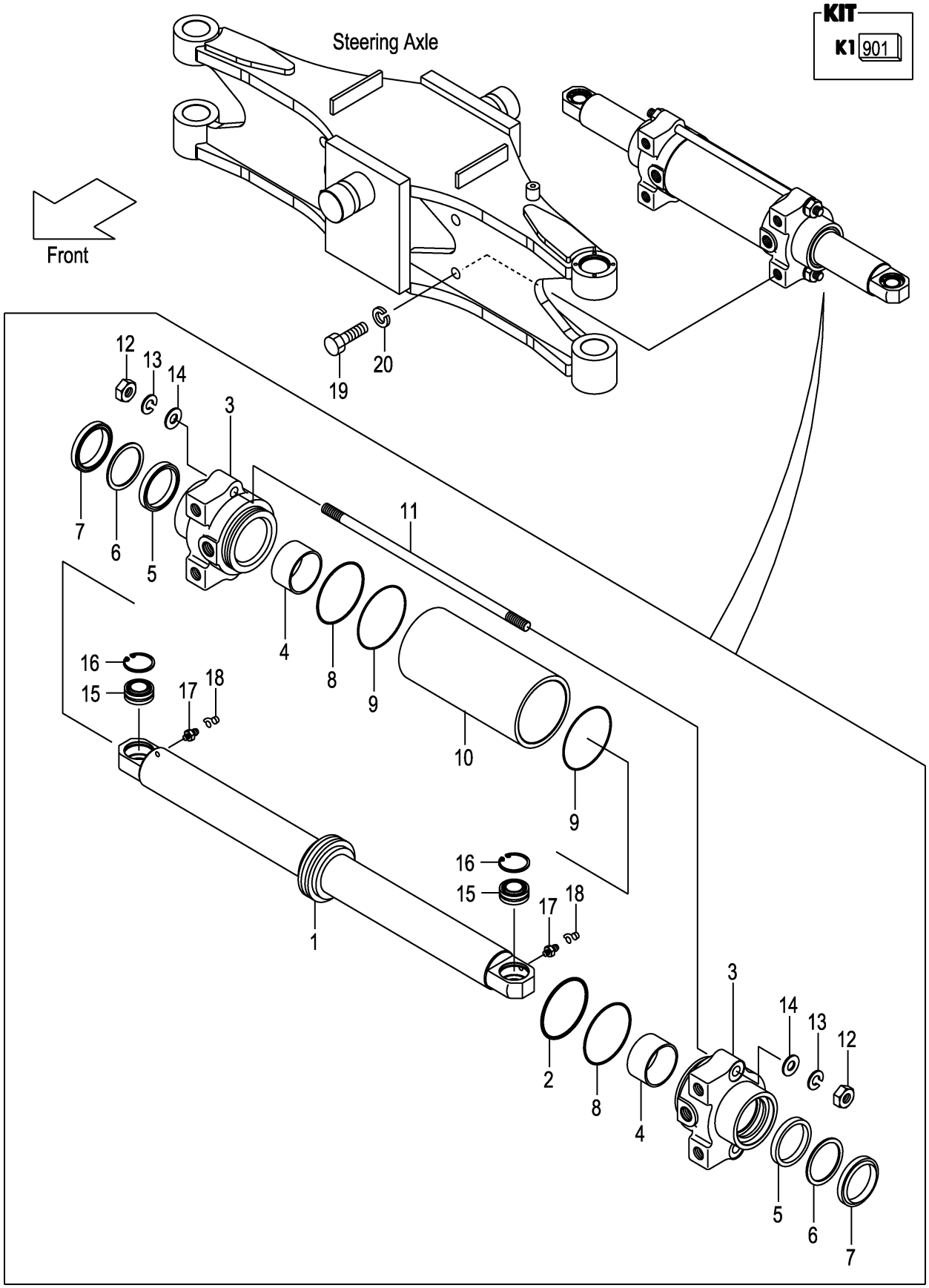

A:FD20C3Z FD20T3Z FD25C3Z FD25T3Z

Item No	Part No.	Mark	Description		Req'd	Remarks : Serial No.
A1	22N54-50201		CYL-ASSY,PS		1	INC.1-18
				ﾊﾟﾜｰｽﾃｱﾘﾝｸﾞｼﾘﾝﾀﾞｱｯｾﾝ		
901	22N54-59801	K1	KIT,OVERHAUL	ｵｰﾊﾞﾎｰﾙｷｯﾄ	1	INC.2,5-9
A2	22N54-50221		ROD-ASSY,PISTON	ﾋﾟｽﾄﾝﾛｯﾄﾞｱｯｾﾝ	1	INC.1,2
1	22N54-52001		ROD,PISTON	ﾛｯﾄﾞ	1	
2	514A2-42201	*	SEAL	ｼｰﾙ	1	
3	22N54-52101		CAP,CYL	ｷｬｯﾌﾟ	2	
4	22N54-52121		BUSHING,DU	ﾌﾞｯｼﾝｸﾞ	2	1-109
-	23460-53171		BUSHING,DU	ﾌﾞｯｼﾝｸﾞ	2	110-
5	97103-35431	*	PACKING	ﾊﾟｯｷﾝｸﾞ	2	
6	22658-52301	*	RING,BACK-UP	ﾘﾝｸﾞ	2	
7	22N54-52141	*	SEAL,DUST	ｼｰﾙ	2	
8	03350-00750	*	O-RING	Oﾘﾝｸﾞ	2	
9	22N54-52151	*	O-RING	Oﾘﾝｸﾞ	2	
10	22N54-52201		BODY,CYL	ﾎﾞﾃﾞｨ	1	
11	22N54-52251		BOLT	ﾎﾞﾙﾄ	2	
12	01400-00012		NUT	ﾅｯﾄ	4	
13	02010-00012		WASHER	ﾜｯｼｬ	4	
14	02000-00012		WASHER	ﾜｯｼｬ	4	
15	215E4-52231		JOINT,SPHERE-FACE	ｼﾞｮｲﾝﾄ	2	
16	02110-00035		RING,SNAP	ｽﾅｯﾌﾟﾘﾝｸﾞ	2	
17	214A8-52051		NIPPLE,GREASE	ﾆｯﾌﾟﾙ	2	
18	22199-12401		CAP,NIPPLE	ｷｬｯﾌﾟ	2	
19	01100-16040		BOLT	ﾎﾞﾙﾄ	4	
20	02010-00016		WASHER	ﾜｯｼｬ	4	

FIG.98 OVERHEAD GUARD

(F7Z25110) オーバ゛ヘッド゛カ゛ード゛

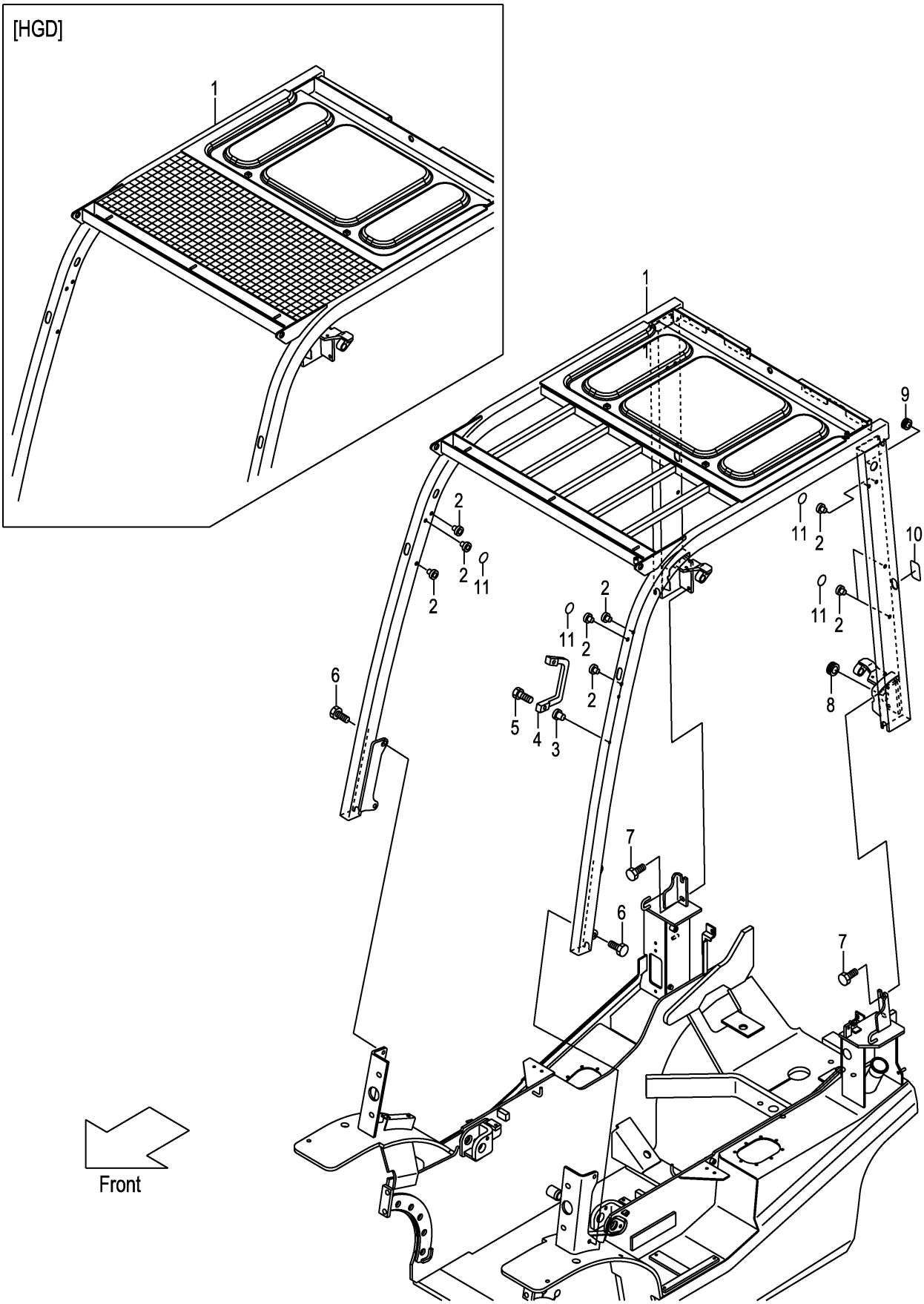

A:FD20C3Z FD20T3Z FD25C3Z FD25T3Z

Item No	Part No.	Mark	Description		Req'd	Remarks : Serial No.
1	22N55-10161		GUARD,HEAD	ｶﾞｰﾄﾞ	1	(WITHOUT SCB001,SCBCR)
-	52N52-90201		GUARD,HEAD	ｶﾞｰﾄﾞ	1	[HGD]
-	52N55-00101		GUARD,HEAD	ｶﾞｰﾄﾞ	1	[HGH060]
-	52N55-00111		GUARD,HEAD	ｶﾞｰﾄﾞ	1	[HGH100]
-	52N55-00121		GUARD,HEAD	ｶﾞｰﾄﾞ	1	[HGH150]
-	52N55-00131		GUARD,HEAD	ｶﾞｰﾄﾞ	1	[HGH200]
-	52N55-00141		GUARD,HEAD	ｶﾞｰﾄﾞ	1	[HGL]
2	514A5-12011		RIVET,POP	ﾘﾍﾞｯﾄ	4	1-109
						(WITHOUT SCB001,SCBCR)
-	514A5-12011		RIVET,POP	ﾘﾍﾞｯﾄ	14	110-
						(WITHOUT SCB001,SCBCR)
3	516G5-13151		RIVET,POP	ﾘﾍﾞｯﾄ	2	(WITHOUT SCB001,SCBCR)
4	516G5-13051		GRIP	ｸﾞﾘｯﾌﾟ	1	(WITHOUT SCB001,SCBCR)
5	01171-06025		BOLT	ﾎﾞﾙﾄ	2	(WITHOUT SCB001,SCBCR)
6	01186-12040		BOLT	ﾎﾞﾙﾄ	4	(WITHOUT SCB001,SCBCR)
7	01186-12025		BOLT	ﾎﾞﾙﾄ	4	(WITHOUT SCB001,SCBCR)
8	524W5-12091		GROMMET	ｸﾞﾛﾒｯﾄ	1	(WITHOUT SCB001,SCBCR)
9	27662-62721		GROMMET	ｸﾞﾛﾒｯﾄ	1	(WITHOUT SCB001,SCBCR)
10	22N55-13191		SEAT,HG	ｼｰﾄ	2	(WITHOUT SCB001,SCBCR)
11	22N55-13181		SEAL,PANEL-COVER	ｼｰﾙ	10	(WITHOUT SCB001,SCBCR)

FIG.99 FRONT LAMP BRACKET

(F7Z25120) フロントランプブラケット

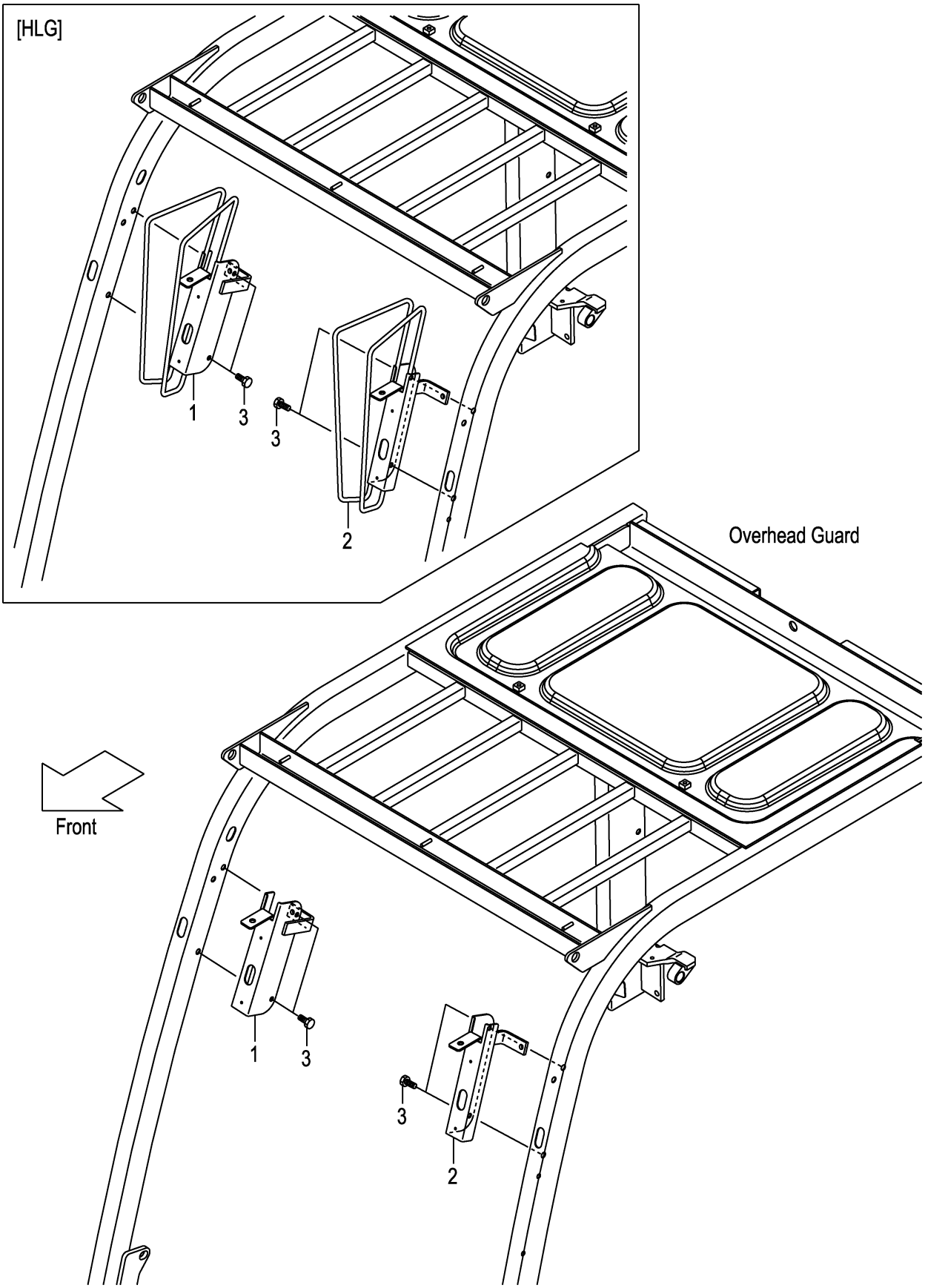

FIG.99

(F7Z25120)

A:FD20C3Z FD20T3Z FD25C3Z FD25T3Z

Item No	Part No.	Mark	Description	Req'd	Remarks : Serial No.
1	22N55-12271		BRACKET,HEAD-LAMP,RH ﾌﾞﾗｹｯﾄ	1	(WITHOUT SCB001,SCBCR,AW071)
-	52N55-12101		BRACKET,HEAD-LAMP,RH ﾌﾞﾗｹｯﾄ	1	[HLG]
2	22N55-12281		BRACKET,HEAD-LAMP,LH ﾌﾞﾗｹｯﾄ	1	(WITHOUT SCB001,SCBCR,AW071)
-	52N55-12111		BRACKET,HEAD-LAMP,LH ﾌﾞﾗｹｯﾄ	1	[HLG]
3	514A5-12021		BOLT ﾎﾞﾙﾄ	4	(WITHOUT SCB001,SCBCR,AW071)

FIG.100 FRONT LAMP BRACKET [HL][BKH]

(F7Z25130) フロントランプブラケット

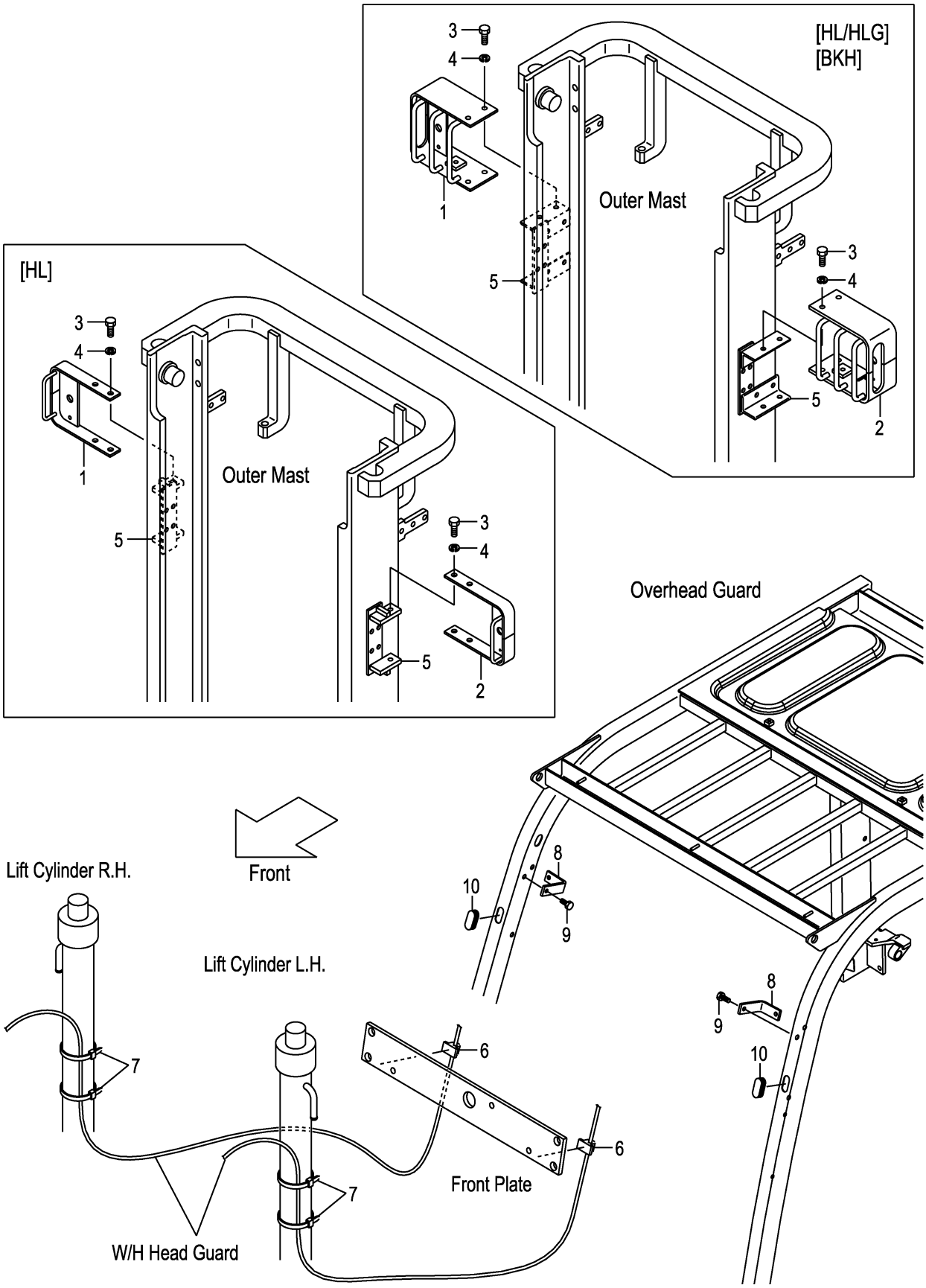

A:FD20C3Z FD20T3Z FD25C3Z FD25T3Z

Item No	Part No.	Mark	Description	Req'd	Remarks : Serial No.
1	534A9-22001		BRACKET,HEAD-LAMP,RH ﾌﾞﾗｹｯﾄ	1	[HL]
-	534A4-22001		BRACKET,HEAD-LAMP,RH ﾌﾞﾗｹｯﾄ	1	[HL/HLG][BKH]
2	534A9-22011		BRACKET,HEAD-LAMP,LH ﾌﾞﾗｹｯﾄ	1	[HL]
-	534A4-22011		BRACKET,HEAD-LAMP,LH ﾌﾞﾗｹｯﾄ	1	[HL/HLG][BKH]
3	01100-12020		BOLT ﾎﾞﾙﾄ	4	[HL][HL/HLG][BKH]
4	02010-00012		WASHER ﾜｯｼｬ	4	[HL][HL/HLG][BKH]
5	641B0-12701		BRACKET,HL ﾌﾞﾗｹｯﾄ	2	[HL]
-	641B0-12751		BRACKET,BKH ﾌﾞﾗｹｯﾄ	2	[HL/HLG][BKH]
6	27732-42221		CLAMP,HARNESS ｸﾗﾝﾌﾟ	2	[HL][HL/HLG][BKH]
7	04913-11380		BAND,INSHULOCK ﾊﾞﾝﾄﾞ	4	[HL][HL/HLG][BKH]
8	22N55-12571		BRACKET,BACK-MIRROR ﾌﾞﾗｹｯﾄ	2	[HL][HL/HLG][BKH]
9	514A5-12021		BOLT ﾎﾞﾙﾄ	2	[HL][HL/HLG][BKH]
10	27662-63711		GROMMET ｸﾞﾛﾒｯﾄ	2	[HL][HL/HLG][BKH]

FIG.101 REAR LAMP COVER

(F7Z25140) ﾘﾔｰﾗﾝﾌﾟｶﾊﾞｰ

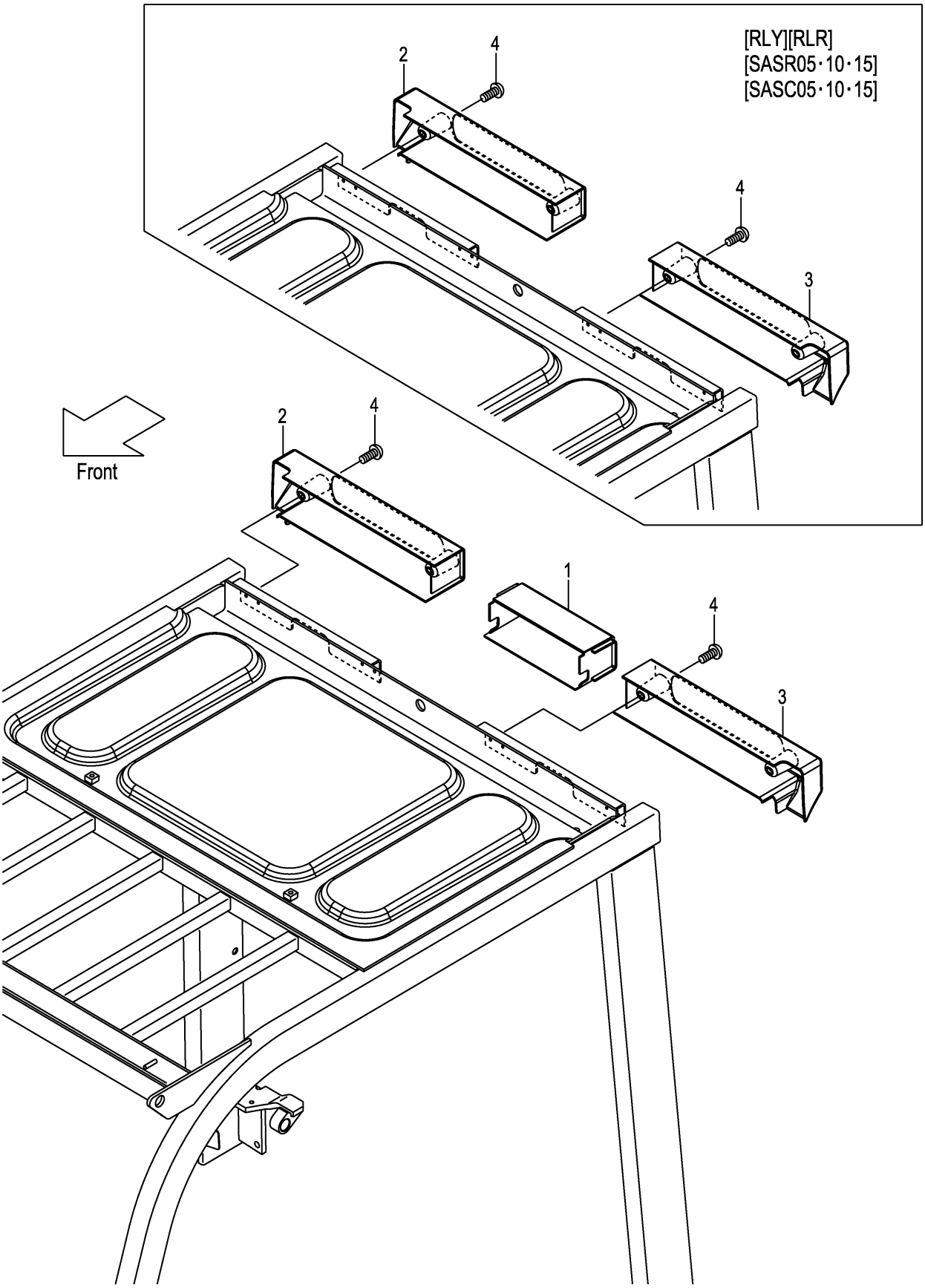

FIG.101

(F7Z25140)

A:FD20C3Z FD20T3Z FD25C3Z FD25T3Z

Item No	Part No.	Mark	Description	Req'd	Remarks : Serial No.
1	22N55-12701		COVER,REAR-LAMP ｶﾊﾞｰ	1	(WITHOUT RLY,RLR,SASR,SASC)
-	52N55-00511		COVER,REAR-LAMP ｶﾊﾞｰ	1	[HGH060][HGH100]
-	52N55-00521		COVER,REAR-LAMP ｶﾊﾞｰ	1	[HGH150][HGH200]
2	22N55-12711		COVER,REAR-LAMP,RH ｶﾊﾞｰ	1	(WITHOUT RLY/SCB,RLR/SCB)
3	22N55-12721		COVER,REAR-LAMP,LH ｶﾊﾞｰ	1	(WITHOUT RLY/SCB,RLR/SCB)
4	214A6-42252		SCREW ｽｸﾘｭ	4	(WITHOUT RLY/SCB,RLR/SCB)

FIG.102 REAR LAMP COVER [RRE]

(F7Z25150) ﾘﾔｰﾗﾝﾌﾟｶﾊﾞｰ

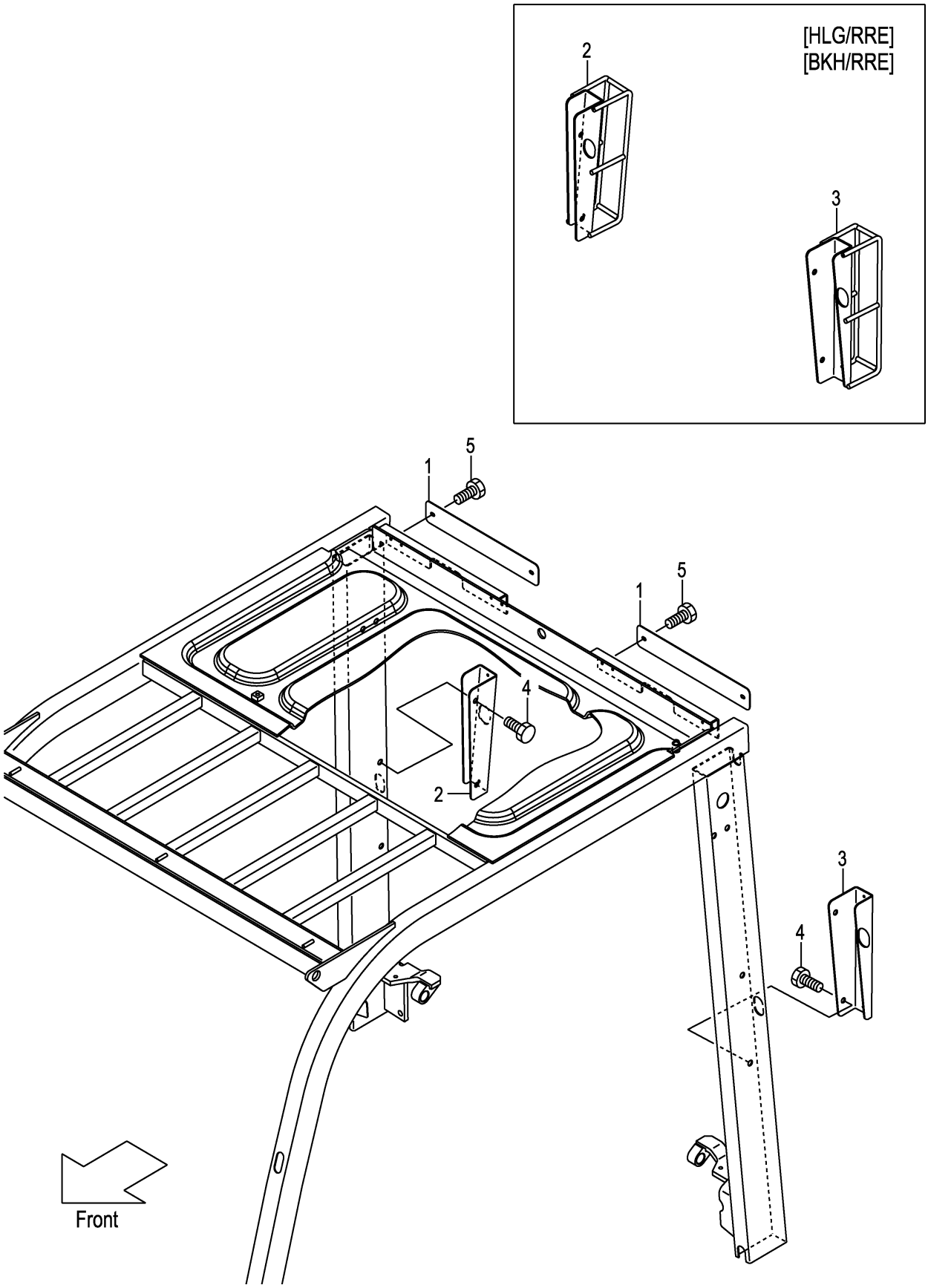

FIG.102

(F7Z25150)

A:FD20C3Z FD20T3Z FD25C3Z FD25T3Z

Item No	Part No.	Mark	Description	Req'd	Remarks : Serial No.
1	52N59-92051		PLATE ﾌﾟﾚｰﾄ	2	[RRE]
2	52N59-92021		BRACKET,REAR-LAMP,RH ﾌﾞﾗｹｯﾄ	1	[RRE]
-	52N55-12001		BRACKET,REAR-LAMP,RH ﾌﾞﾗｹｯﾄ	1	[HLG/RRE][BKH/RRE]
3	52N59-92031		BRACKET,REAR-LAMP,LH ﾌﾞﾗｹｯﾄ	1	[RRE]
-	52N55-12011		BRACKET,REAR-LAMP,LH ﾌﾞﾗｹｯﾄ	1	[HLG/RRE][BKH/RRE]
4	514A5-12021		BOLT ﾎﾞﾙﾄ	4	[RRE]
5	01031-06065		BOLT ﾎﾞﾙﾄ	4	[RRE]

FIG.103 HEAD GUARD PARTS

(F7Z251A0) ﾍｯﾄﾞｶﾞｰﾄﾞﾊﾟｰﾂ

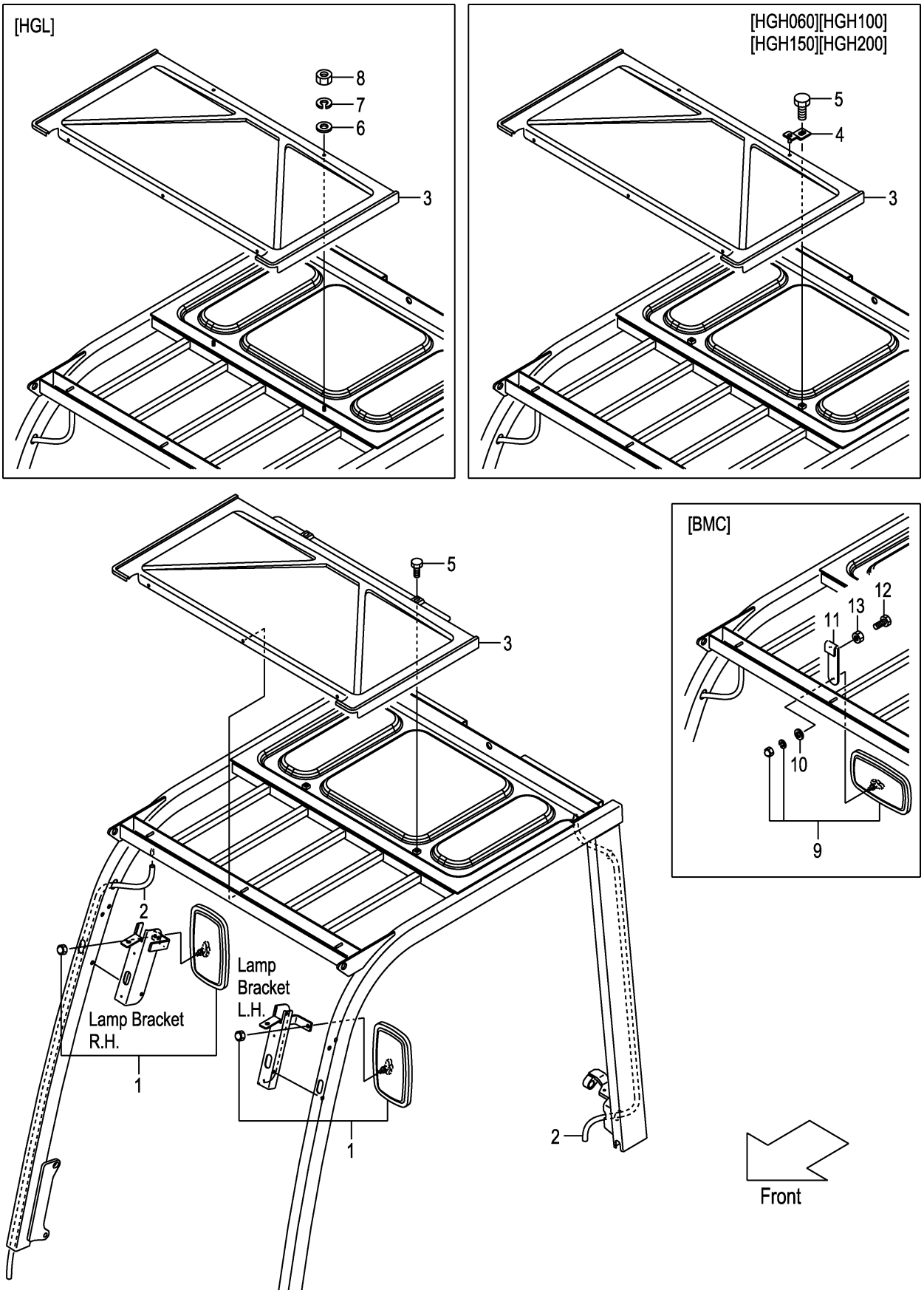

FIG.103
(F7Z251A0)

A:FD20C3Z FD20T3Z FD25C3Z FD25T3Z

Item No	Part No.	Mark	Description		Req'd	Remarks : Serial No.
1	239A9-92001		MIRROR	ﾐﾗｰ	2	
2	534A5-00401		HOSE,VINYL	ﾎｰｽ	2	(WITHOUT SCB001,SCBCR)
-	534A5-00411		HOSE,VINYL	ﾎｰｽ	2	[HGH060][HGH100]
-	577H5-13051		HOSE,VINYL	ﾎｰｽ	2	[HGH150][HGH200]
-	516M5-12301		HOSE,VINYL	ﾎｰｽ	2	[HGL]
3	22N55-12901		CANVAS	ｷｬﾝﾊﾞｽ	1	
-	52N55-00501		CANVAS	ｷｬﾝﾊﾞｽ	1	[HGH060][HGH100][HGH150] [HGH200][HGL]
4	52N55-00551		BRACKET	ﾌﾞﾗｹｯﾄ	2	[HGH060][HGH100][HGH150] [HGH200]
5	01185-08016		BOLT	ﾎﾞﾙﾄ	2	(WITHOUT HGL)
6	02000-00006		WASHER	ﾜｯｼｬ	2	[HGL]
7	02010-00006		WASHER	ﾜｯｼｬ	2	[HGL]
8	01400-00006		NUT	ﾅｯﾄ	2	[HGL]
9	239A9-92001		MIRROR	ﾐﾗｰ	1	[BMC]
10	222A9-32011		WASHER	ﾜｯｼｬ	1	[BMC]
11	539A9-32001		BRACKET,BACK-MIRROR	ﾌﾞﾗｹｯﾄ	1	[BMC]
12	01100-08025		BOLT	ﾎﾞﾙﾄ	2	[BMC]
13	01402-00008		NUT	ﾅｯﾄ	2	[BMC]

FIG.104 ACCEL PEDAL

(F7Z25220) アクセルペダル

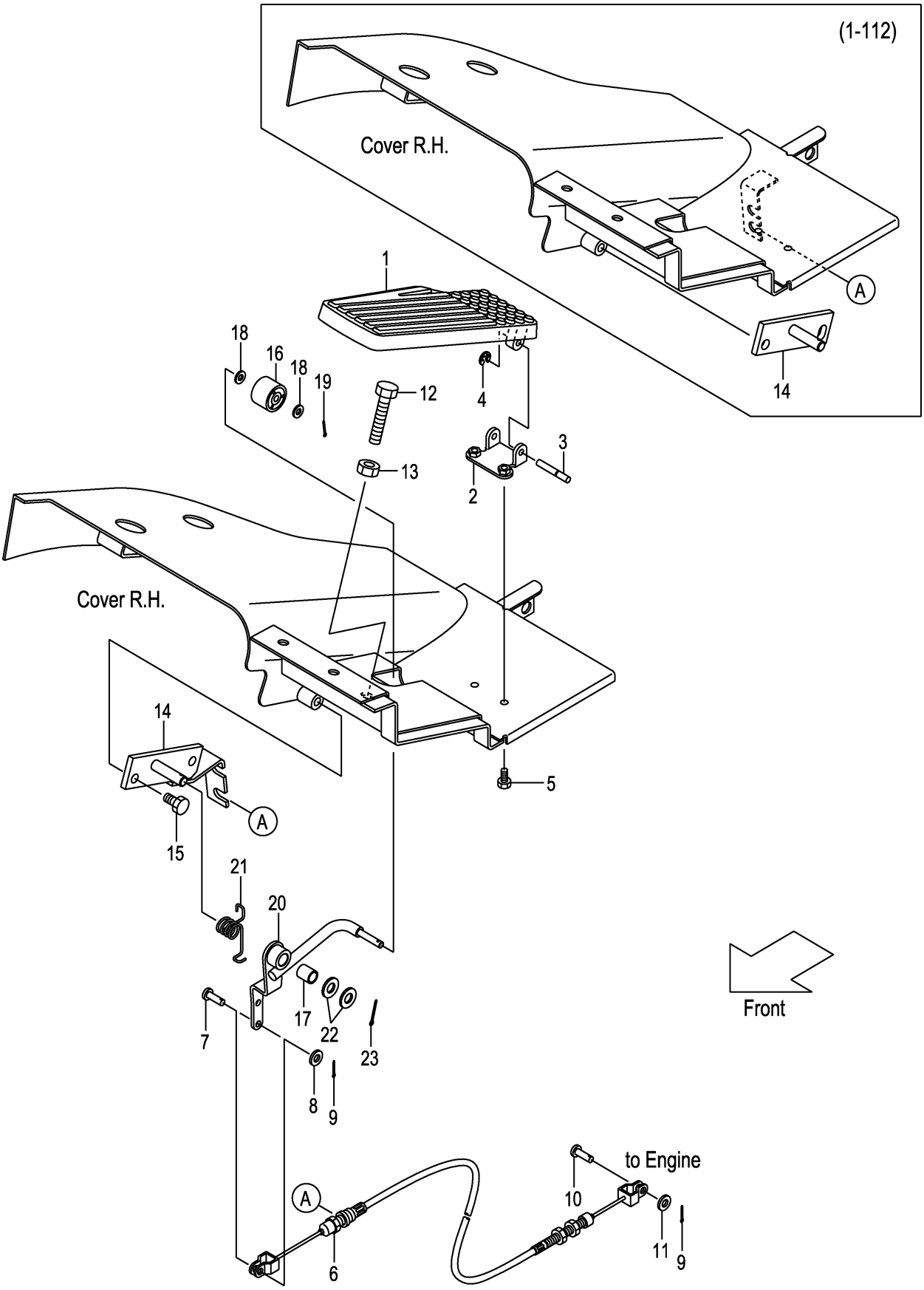

A:FD20C3Z FD20T3Z FD25C3Z FD25T3Z

Item No	Part No.	Mark	Description		Req'd	Remarks : Serial No.
A1	22N55-20211		PEDAL-ASSY,ACCEL	ｱｸｾﾙﾍﾟﾀﾞﾙｱｯｾﾝ	1	INC.1-4
1	NO PART NO.	#	PEDAL	ﾍﾟﾀﾞﾙ	1	
2	NO PART NO.	#	SUPPORT	ｻﾎﾟｰﾄ	1	
3	22N55-22121		SHAFT	ｼｬﾌﾄ	1	
4	22N55-22131		E-RING	Eﾘﾝｸﾞ	1	
5	01183-06012		BOLT	ﾎﾞﾙﾄ	2	
6	22U55-22102		CABLE,ACCEL	ｹｰﾌﾞﾙ	1	
7	02262-06015		PIN,CLEVIS	ﾋﾟﾝ	1	
8	02000-00006		WASHER	ﾜｯｼｬ	1	
9	02200-16015		PIN,COTTER	ﾋﾟﾝ	2	
10	22717-40061		PIN,CLEVIS	ﾋﾟﾝ	1	
11	02000-00005		WASHER	ﾜｯｼｬ	1	
12	01100-10040		BOLT	ﾎﾞﾙﾄ	1	
13	01400-00010		NUT	ﾅｯﾄ	1	
14	22N55-22011		BRACKET,ACCEL-LINK	ﾌﾞﾗｹｯﾄ	1	1-112
-	20A75-22001		BRACKET,ACCEL-LINK	ﾌﾞﾗｹｯﾄ	1	113-
15	01185-08016		BOLT	ﾎﾞﾙﾄ	2	
A2	22N55-20201		LINK-ASSY,ACCEL	ｱｸｾﾙﾘﾝｸｱｯｾﾝ	1	1-112
						INC.16-20
-	20A75-20201		LINK-ASSY,ACCEL	ｱｸｾﾙﾘﾝｸｱｯｾﾝ	1	113-
						INC.16-20
16	214A5-22001		ROLLER	ﾛｰﾗ	1	
17	23655-22101		BUSHING	ﾌﾞｯｼﾝｸﾞ	1	1-112
-	256C1-12111		BUSHING	ﾌﾞｯｼﾝｸﾞ	1	113-
18	02000-00006		WASHER	ﾜｯｼｬ	2	
19	02200-16010		PIN,COTTER	ﾋﾟﾝ	1	
20	NO PART NO.	#	LINK,ACCEL	ﾘﾝｸ	1	1-112
-	NO PART NO.	#	LINK,ACCEL	ﾘﾝｸ	1	113-
21	22N55-22031		SPRING	ｽﾌﾟﾘﾝｸﾞ	1	
22	02000-00010		WASHER	ﾜｯｼｬ	2	1-112
-	02000-00012		WASHER	ﾜｯｼｬ	2	113-
23	02200-03020		PIN,COTTER	ﾋﾟﾝ	1	

FIG.105 FOOT PEDAL (CLUTCH)

(F7Z25410) ﾌｯﾄﾍﾟﾀﾞﾙ

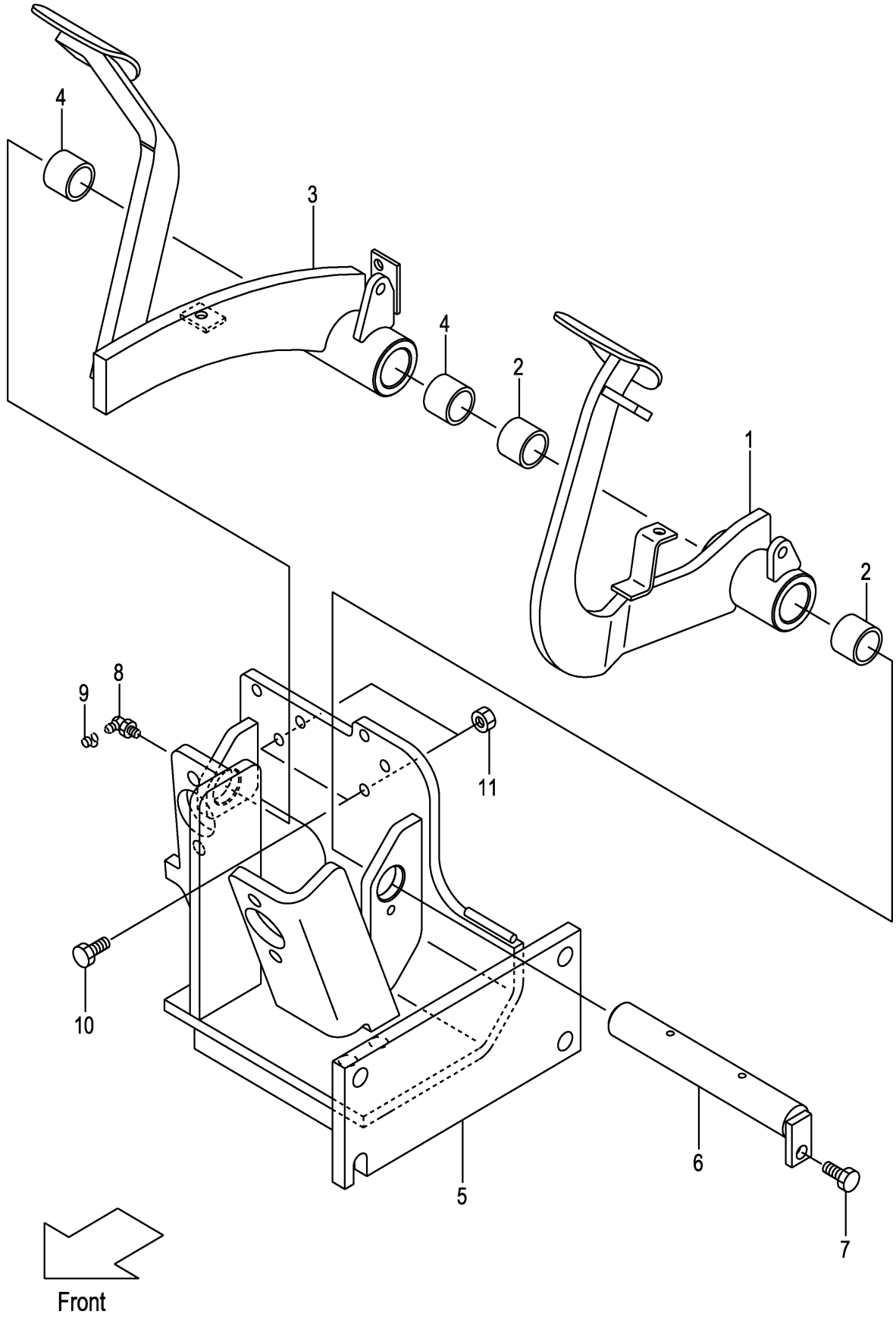

A:FD20C3Z FD25C3Z

Item No	Part No.	Mark	Description		Req'd	Remarks : Serial No.
A1	22N45-30303		PEDAL-ASSY,CLUTCH	ｸﾗｯﾁﾍﾟﾀﾞﾙｱｯｾﾝ	1	INC.1,2
1	NO PART NO.	#	PEDAL,CLUTCH	ﾍﾟﾀﾞﾙ	1	
2	23655-42421		BUSHING,PEDAL	ﾌﾞｯｼﾝｸﾞ	2	
A2	22N45-40302		PEDAL-ASSY,BRAKE	ﾌﾞﾚｰｷﾍﾟﾀﾞﾙｱｯｾﾝ	1	INC.3,4
3	NO PART NO.	#	PEDAL,BRAKE	ﾍﾟﾀﾞﾙ	1	
4	23655-42421		BUSHING,PEDAL	ﾌﾞｯｼﾝｸﾞ	2	
5	22N45-40202		BRACKET,PEDAL	ﾌﾞﾗｹｯﾄ	1	
6	22N45-42101		SHAFT,PEDAL	ｼｬﾌﾄ	1	
7	01183-08016		BOLT	ﾎﾞﾙﾄ	1	
8	04901-00190		FITTING	ﾌｨｯﾃｨﾝｸﾞ	1	
9	22199-12401		CAP,NIPPLE	ｷｬｯﾌﾟ	1	
10	01100-10025		BOLT	ﾎﾞﾙﾄ	2	
11	01402-00010		NUT	ﾅｯﾄ	2	

FIG.106 FOOT PEDAL (TOR-CON)

(F7Z25420) ﾌｯﾄﾍﾟﾀﾞﾙ

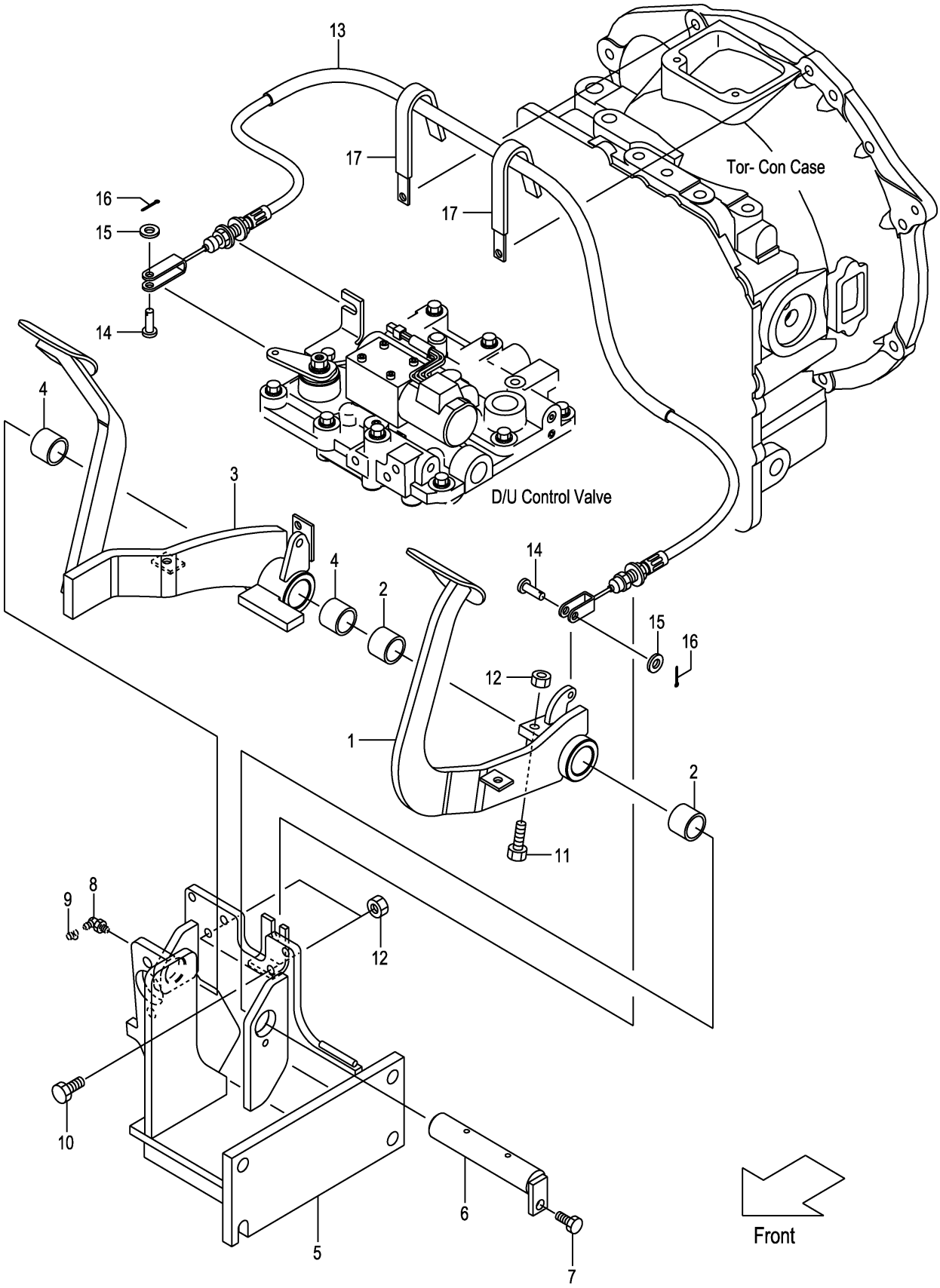

A:FD20T3Z FD25T3Z

Item No	Part No.	Mark	Description		Req'd	Remarks : Serial No.
A1	22N55-40402		PEDAL-ASSY,INCHING	ｲﾝﾁﾝｸﾞﾍﾟﾀﾞﾙｱｯｾﾝ	1	INC.1,2
1	NO PART NO.	#	PEDAL,INCHING	ﾍﾟﾀﾞﾙ	1	
2	23655-42421		BUSHING,PEDAL	ﾌﾞｯｼﾝｸﾞ	2	
A2	22N55-40302		PEDAL-ASSY,BRAKE	ﾌﾞﾚｰｷﾍﾟﾀﾞﾙｱｯｾﾝ	1	INC.3,4
3	NO PART NO.	#	PEDAL,BRAKE	ﾍﾟﾀﾞﾙ	1	
4	23655-42421		BUSHING,PEDAL	ﾌﾞｯｼﾝｸﾞ	2	
5	22N55-40202		BRACKET,PEDAL	ﾌﾞﾗｹｯﾄ	1	
6	22N55-42101		SHAFT,PEDAL	ｼｬﾌﾄ	1	
7	01183-08016		BOLT	ﾎﾞﾙﾄ	1	
8	04901-00190		FITTING	ﾌｨｯﾃｨﾝｸﾞ	1	
9	22199-12401		CAP,NIPPLE	ｷｬｯﾌﾟ	1	
10	01100-10025		BOLT	ﾎﾞﾙﾄ	2	
11	01100-10030		BOLT	ﾎﾞﾙﾄ	1	1-109
-	01120-10040		BOLT	ﾎﾞﾙﾄ	1	110-
12	01402-00010		NUT	ﾅｯﾄ	3	
13	22N55-42601		CABLE,INCHING	ｹｰﾌﾞﾙ	1	
14	02262-06020		PIN,CLEVIS	ﾋﾟﾝ	2	
15	02000-00006		WASHER	ﾜｯｼｬ	2	
16	02200-16015		PIN,COTTER	ﾋﾟﾝ	2	
17	214A2-42331		CLIP	ｸﾘｯﾌﾟ	2	110-

FIG.107 FOOT PEDAL CYLINDER (CLUTCH)

(F7Z25440) ﾌｯﾄﾍﾟﾀﾞﾙｼﾘﾝﾀﾞ

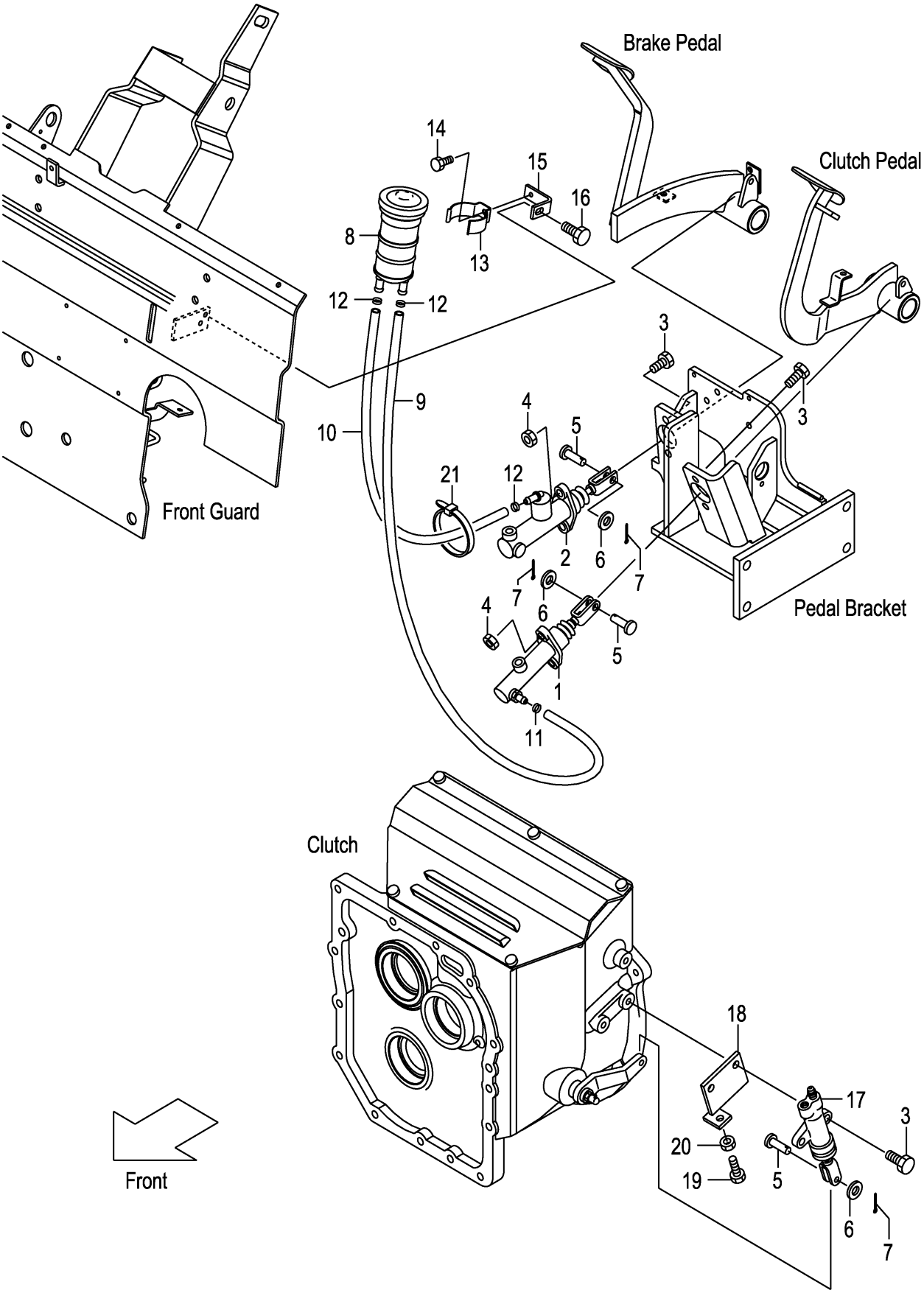

A:FD20C3Z FD25C3Z

Item No	Part No.	Mark	Description		Req'd	Remarks : Serial No.
1	239A5-40501		CYL,CLUTCH-MASTER	ｼﾘﾝﾀﾞ	1	SEE FIG.112
2	27045-40302		CYL,BRAKE-MASTER	ｼﾘﾝﾀﾞ	1	SEE FIG.113
3	01184-10030		BOLT	ﾎﾞﾙﾄ	6	
4	01400-00010		NUT	ﾅｯﾄ	4	
5	02262-08025		PIN,CLEVIS	ﾋﾟﾝ	3	
6	02000-00008		WASHER	ﾜｯｼｬ	3	
7	02200-02020		PIN,COTTER	ﾋﾟﾝ	3	
8	216G5-42011		TANK,RESERVE	ﾀﾝｸ	1	
9	22N45-32151		HOSE,RESERVE	ﾎｰｽ	1	
10	22N45-32161		HOSE,RESERVE	ﾎｰｽ	1	
11	25595-42491		BAND,HOSE	ﾊﾞﾝﾄﾞ	1	
12	25785-43091		BAND,HOSE	ﾊﾞﾝﾄﾞ	3	
13	224G5-42061		CLIP,RESERVE-TANK	ｸﾘｯﾌﾟ	1	
14	01183-06010		BOLT	ﾎﾞﾙﾄ	1	
15	22N55-42141		BRACKET	ﾌﾞﾗｹｯﾄ	1	
16	01185-08016		BOLT	ﾎﾞﾙﾄ	1	
17	214A5-32312		CYL,CLUTCH-RELEASE	ｼﾘﾝﾀﾞ	1	SEE FIG.114
18	22N45-32201		BRACKET,RELEASE-CYL	ﾌﾞﾗｹｯﾄ	1	
19	01100-10025		BOLT	ﾎﾞﾙﾄ	1	
20	01402-00010		NUT	ﾅｯﾄ	1	
21	04913-11100		BAND	ﾊﾞﾝﾄﾞ	1	

FIG.108 FOOT PEDAL CYLINDER (TOR-CON)

(F7Z25450) ﾌｯﾄﾍﾟﾀﾞﾙｼﾘﾝﾀﾞ

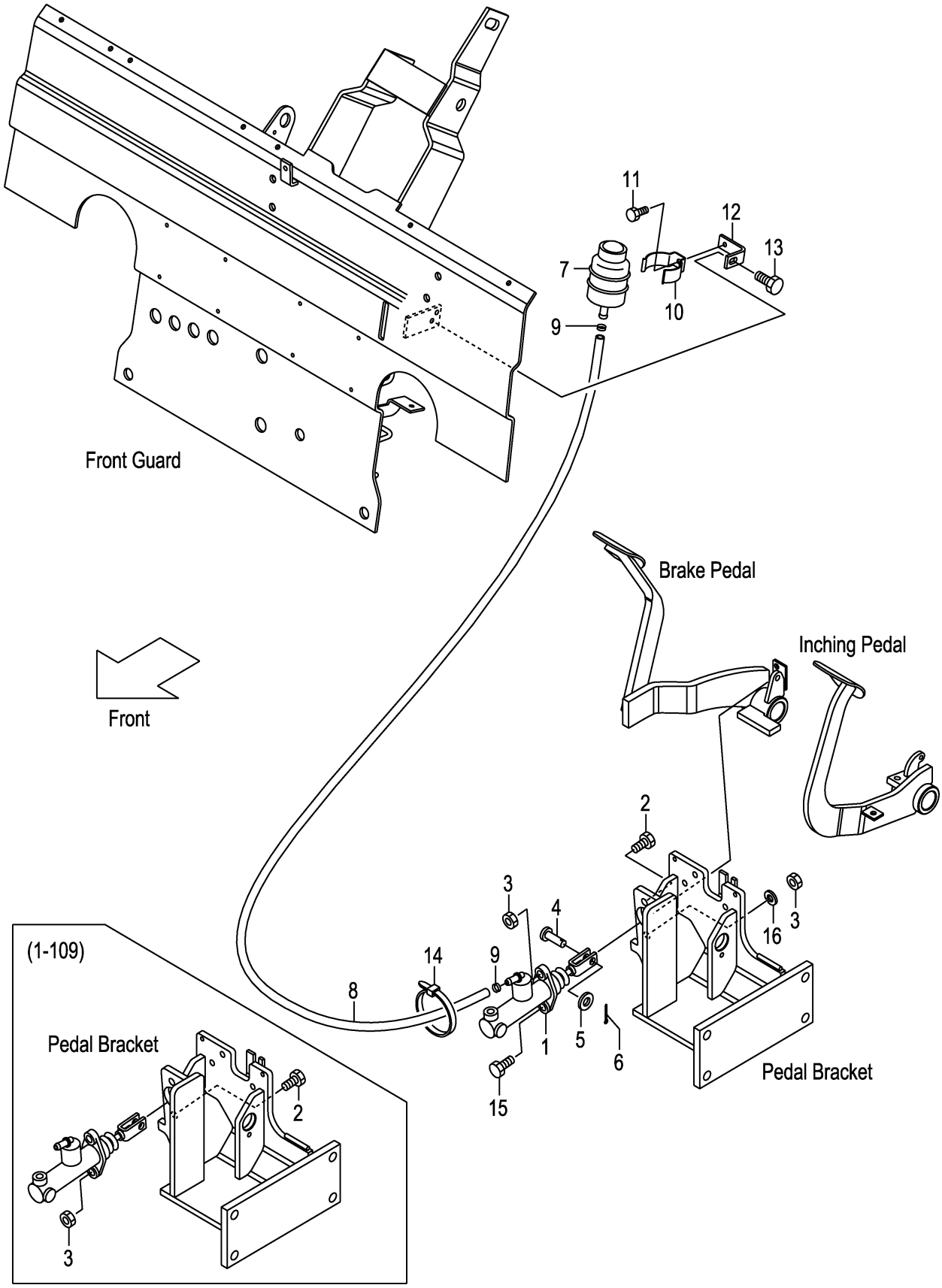

A:FD20T3Z FD25T3Z

Item No	Part No.	Mark	Description		Req'd	Remarks : Serial No.
1	27045-40302		CYL,BRAKE-MASTER	ｼﾘﾝﾀﾞ	1	SEE FIG.113
2	01184-10030		BOLT	ﾎﾞﾙﾄ	2	1-109
-	01184-10030		BOLT	ﾎﾞﾙﾄ	1	110-
3	01400-00010		NUT	ﾅｯﾄ	2	
4	02262-08025		PIN,CLEVIS	ﾋﾟﾝ	1	
5	02000-00008		WASHER	ﾜｯｼｬ	1	
6	02200-02020		PIN,COTTER	ﾋﾟﾝ	1	
7	23775-42101		TANK,RESERVE	ﾀﾝｸ	1	
8	27045-42371		HOSE,RESERVE	ﾎｰｽ	1	1-109
-	22655-42591		HOSE,RESERVE	ﾎｰｽ	1	110-
9	25595-42491		BAND,HOSE	ﾊﾞﾝﾄﾞ	2	
10	224G5-42061		CLIP,RESERVE-TANK	ｸﾘｯﾌﾟ	1	
11	01183-06010		BOLT	ﾎﾞﾙﾄ	1	
12	22N55-42141		BRACKET	ﾌﾞﾗｹｯﾄ	1	
13	01185-08016		BOLT	ﾎﾞﾙﾄ	1	
14	04913-11100		BAND	ﾊﾞﾝﾄﾞ	1	
15	01100-10030		BOLT	ﾎﾞﾙﾄ	1	110-
16	02010-00010		WASHER	ﾜｯｼｬ	1	110-

FIG.109 BRAKE PIPE (CLUTCH)

(F7Z25490) ﾌﾞﾚｰｷﾊﾟｲﾌﾟ

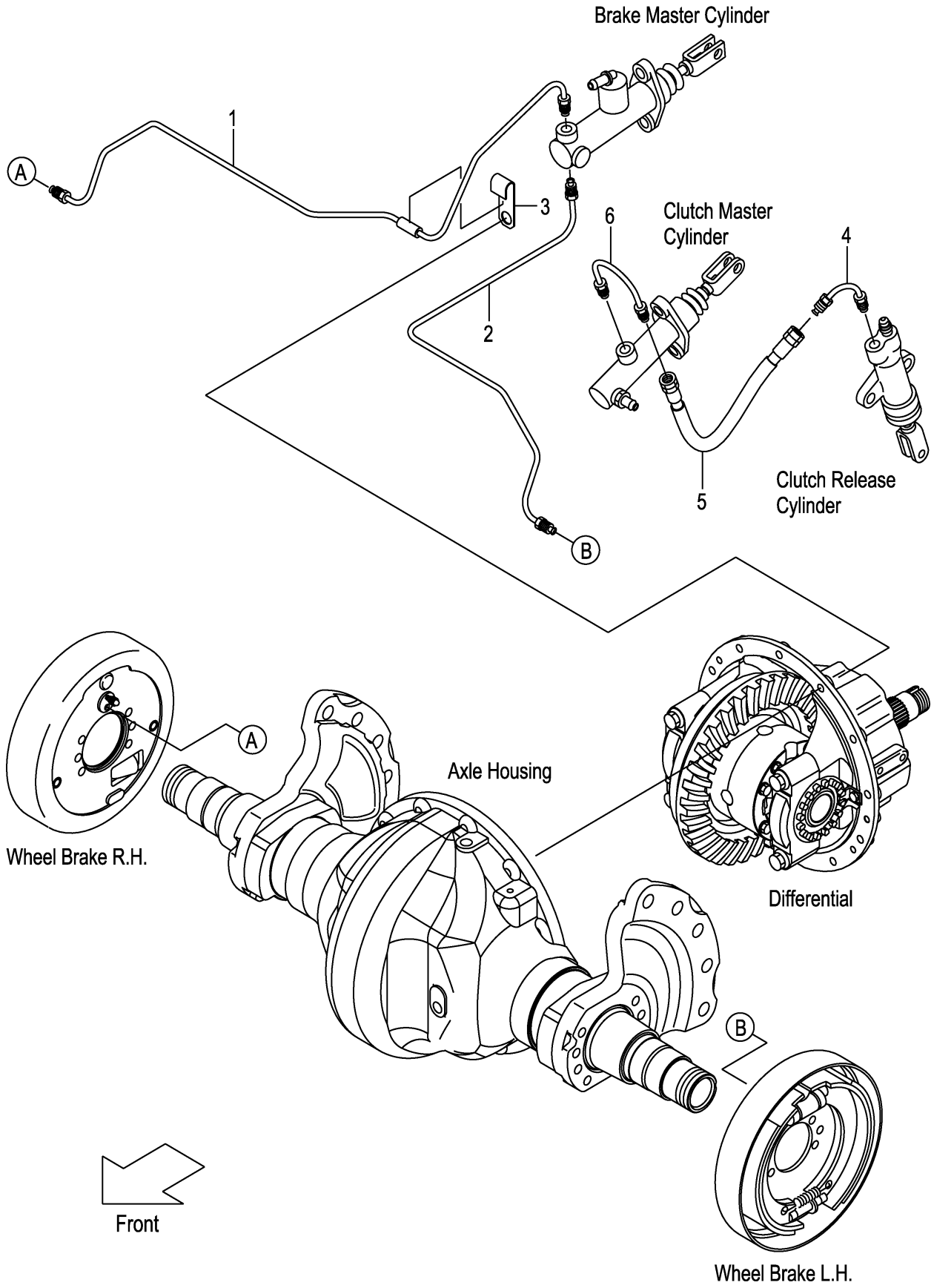

A:FD20C3Z FD25C3Z

Item No	Part No.	Mark	Description		Req'd	Remarks : Serial No.
1	22N45-42701		PIPE,BRAKE,RH	ﾊﾟｲﾌﾟ	1	
2	22N45-42801		PIPE,BRAKE,LH	ﾊﾟｲﾌﾟ	1	
3	22N55-42171		CLIP,PIPE	ｸﾘｯﾌﾟ	1	
4	239A5-42471		PIPE,CLUTCH-MASTER	ﾊﾟｲﾌﾟ	1	
5	240A5-42411		HOSE,BRAKE	ﾎｰｽ	1	1-109
-	22N45-32131		HOSE,BRAKE	ﾎｰｽ	1	110-
6	22N45-32101		PIPE,MASTER-CYL	ﾊﾟｲﾌﾟ	1	

FIG.110 BRAKE PIPE (TOR-CON)

(F7Z254A0) ﾌﾞﾚｰｷﾊﾟｲﾌﾟ

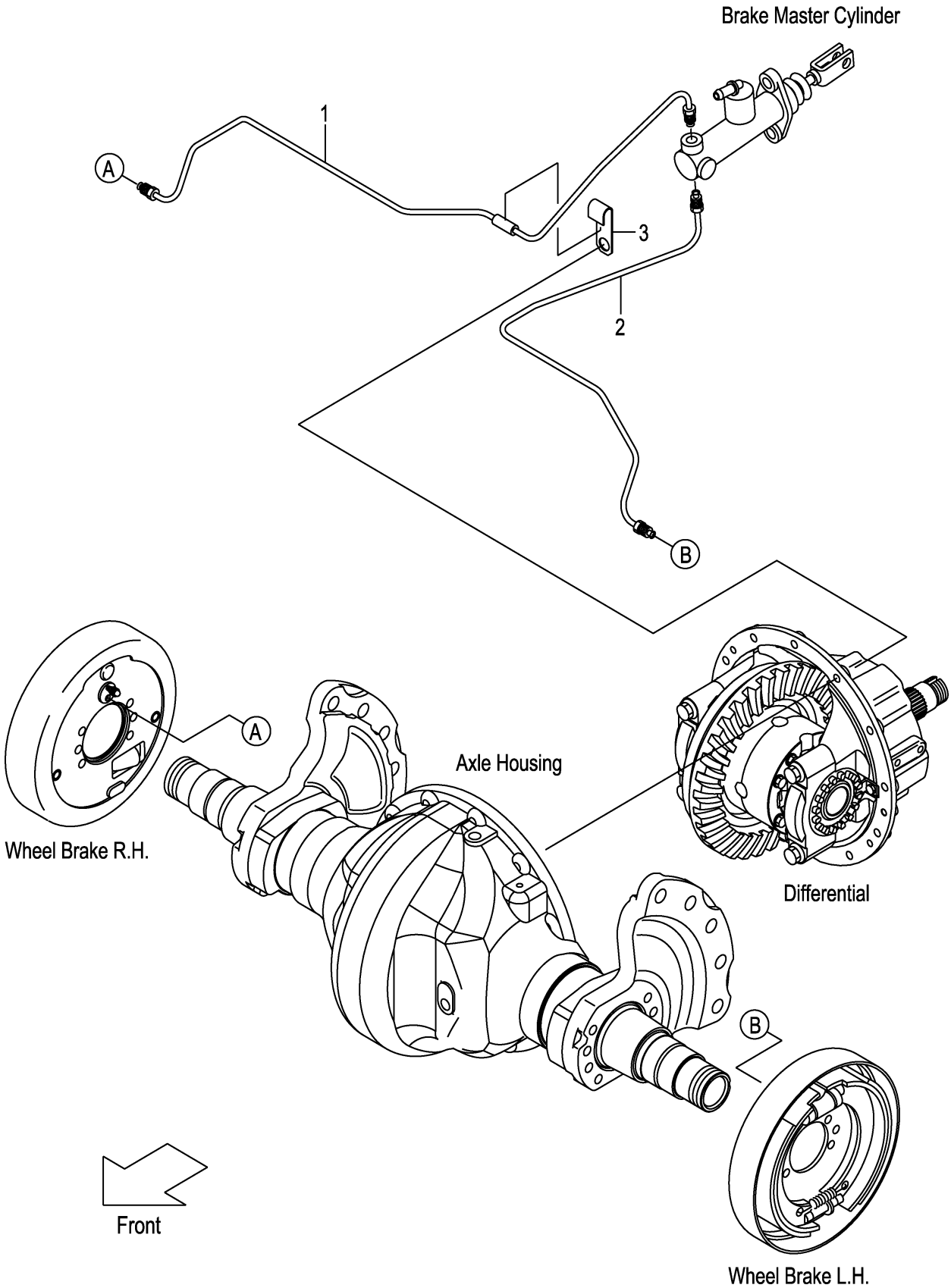

FIG.110
(F7Z254A0)

A:FD20T3Z FD25T3Z

Item No	Part No.	Mark	Description	Req'd	Remarks : Serial No.
1	22N55-42702		PIPE,BRAKE,RH ﾊﾟｲﾌﾟ	1	
2	22N55-42802		PIPE,BRAKE,LH ﾊﾟｲﾌﾟ	1	
3	22N55-42171		CLIP,PIPE ｸﾘｯﾌﾟ	1	

FIG.111 FOOT PEDAL PARTS

(F7Z254E0) ﾌｯﾄﾍﾟﾀﾞﾙﾊﾟｰﾂ

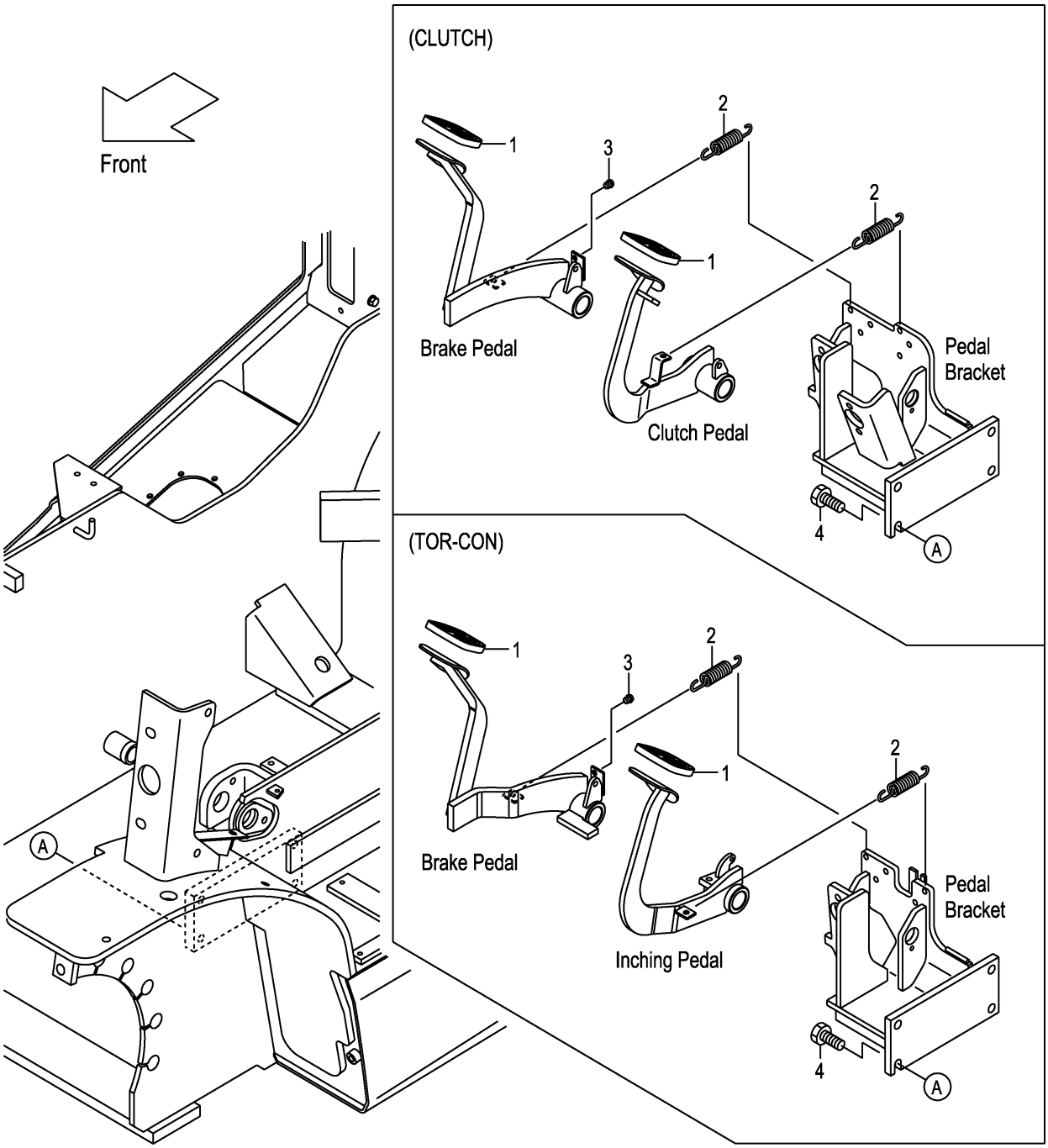

FIG.111

(F7Z254E0)

A:FD20C3Z FD20T3Z FD25C3Z FD25T3Z

Item No	Part No.	Mark	Description		Req'd	Remarks : Serial No.
1	239A5-42301		COVER,HEAD	ｶﾊﾞｰ	2	
2	24235-42091		SPRING	ｽﾌﾟﾘﾝｸﾞ	2	
3	23235-40091		RUBBER	ﾗﾊﾞｰ	1	
4	01184-12030		BOLT	ﾎﾞﾙﾄ	4	

FIG.112 CLUTCH MASTER CYLINDER (CLUTCH)

(F7Z254K0) クラッチマスタシリンダ

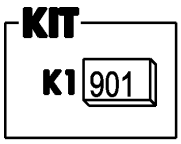

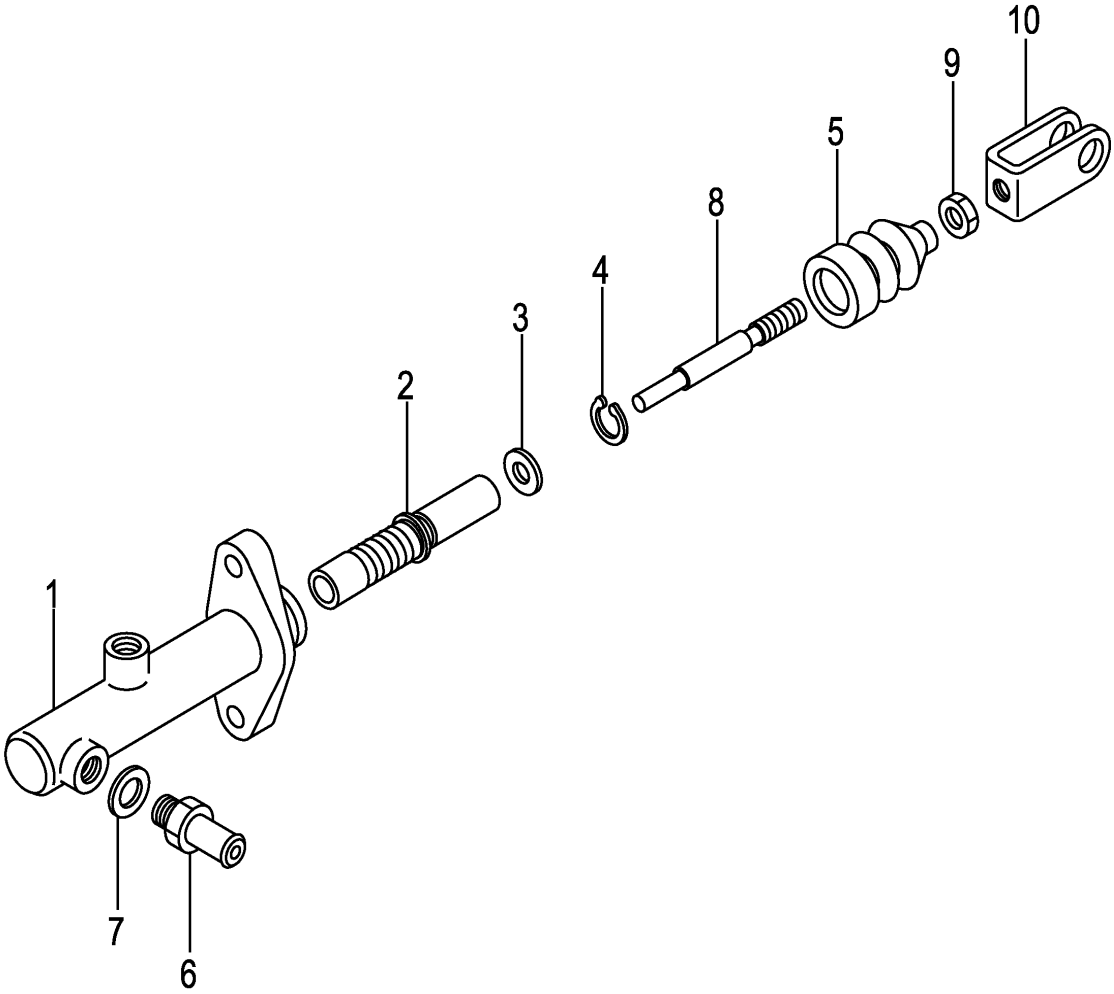

A:FD20C3Z FD25C3Z

Item No	Part No.	Mark	Description		Req'd	Remarks : Serial No.
A1	239A5-40501		CYL-ASSY,CLUTCH-MASTER	クラッチマスタシリンダアッセン	1	INC.1-10
901	216G5-32201	K1	KIT,REPAIR	リペアキット	1	INC.2-5
1	NO PART NO.	#	BODY,CYL	ボディ	1	
2	NO PART NO.	#*	PISTON	ピストン	1	
3	NO PART NO.	#*	PLATE,PISTON-STOPPER	プレート	1	
4	NO PART NO.	#*	RING,SNAP	スナップリング	1	
5	NO PART NO.	#*	BOOT	ブーツ	1	
6	216G5-32331		UNION	ユニオン	1	
7	216G5-32341		GASKET	ガスケット	1	
8	NO PART NO.	#	ROD,PUSH	ロッド	1	
9	01402-00008		NUT	ナット	1	
10	25595-42452		CLEVIS	クレビス	1	

FIG.113 BRAKE MASTER CYLINDER

(F7Z254M0) ﾌﾞﾚｰｷﾏｽﾀｼﾘﾝﾀﾞ

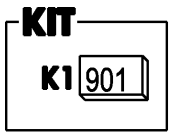

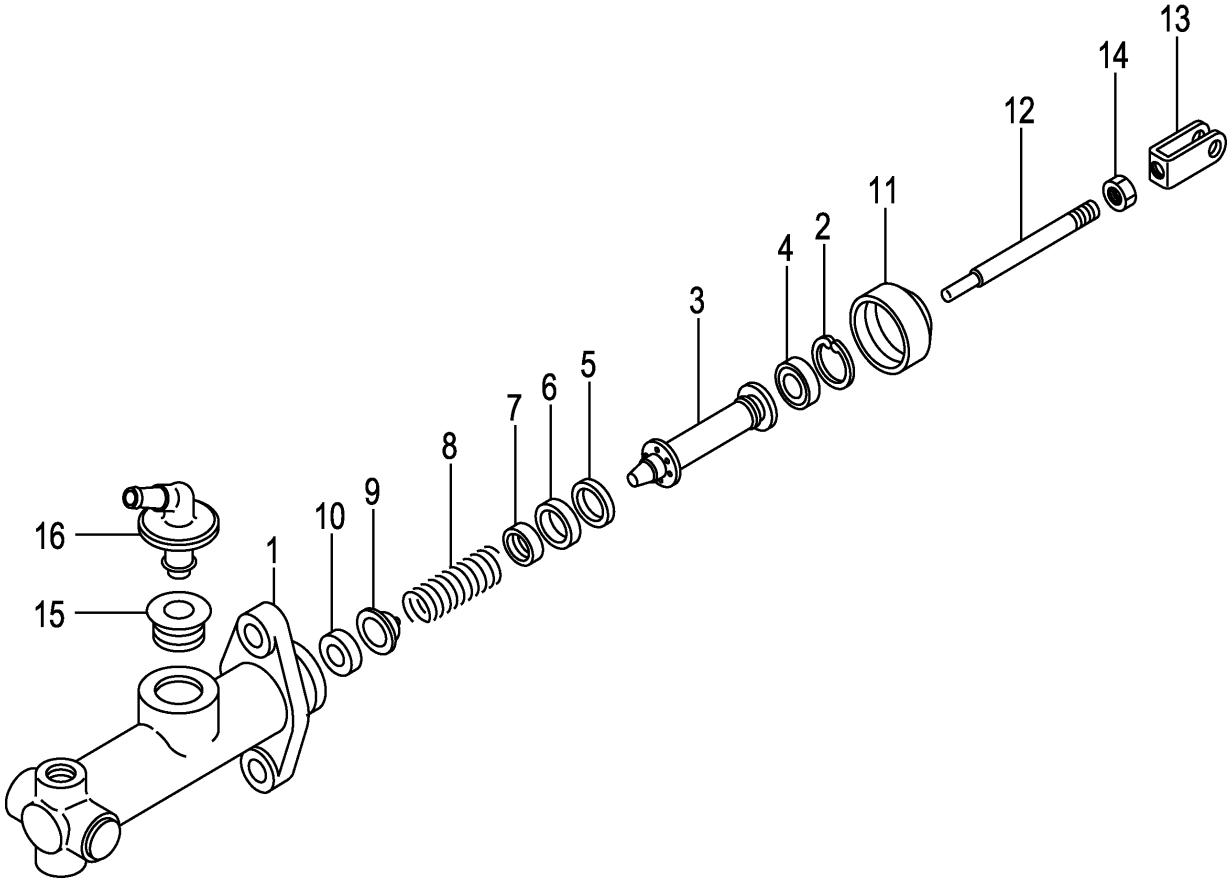

A:FD20C3Z FD20T3Z FD25C3Z FD25T3Z

Item No	Part No.	Mark	Description		Req'd	Remarks : Serial No.
A1	27045-40302		CYL-ASSY,BRAKE-MASTER	ﾌﾞﾚｰｷﾏｽﾀｼﾘﾝﾀﾞｱｯｾﾝ	1	INC.1-16
901	25595-42501	K1	KIT,REPAIR	ﾘﾍﾟｱｷｯﾄ	1	INC.2-11
1	NO PART NO.	#	BODY,CYL	ﾎﾞﾃﾞｨ	1	
2	NO PART NO.	#*	RING,SNAP	ｽﾅｯﾌﾟﾘﾝｸﾞ	1	
3	NO PART NO.	#*	PISTON	ﾋﾟｽﾄﾝ	1	
4	NO PART NO.	#*	CAP,SECONDARY	ｷｬｯﾌﾟ	1	
5	NO PART NO.	#*	SPACER	ｽﾍﾟｰｻ	1	
6	NO PART NO.	#*	CAP,PRIMARY	ｷｬｯﾌﾟ	1	
7	NO PART NO.	#*	SEAT,SPRING	ｼｰﾄ	1	
8	NO PART NO.	#*	SPRING	ｽﾌﾟﾘﾝｸﾞ	1	
9	NO PART NO.	#*	VALVE	ﾊﾞﾙﾌﾞ	1	
10	NO PART NO.	#*	SEAT,VALVE	ｼｰﾄ	1	
11	NO PART NO.	#*	BOOT	ﾌﾞｰﾂ	1	
A2	25595-42482		ROD-ASSY,PUSH	ﾌﾟｯｼｭﾛｯﾄﾞｱｯｾﾝ	1	INC.12-14
12	NO PART NO.	#	ROD,PUSH	ﾛｯﾄﾞ	1	
13	25595-42452		CLEVIS	ｸﾚﾋﾞｽ	1	
14	01402-00008		NUT	ﾅｯﾄ	1	
15	25595-42421		BUSHING	ﾌﾞｯｼﾝｸﾞ	1	
16	25595-42411		UNION,FILLER	ﾕﾆｵﾝ	1	

FIG.114 CLUTCH RELEASE CYLINDER (CLUTCH)

(F7Z254P0) クラッチリリースシリンダ

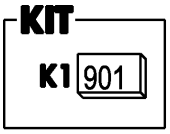

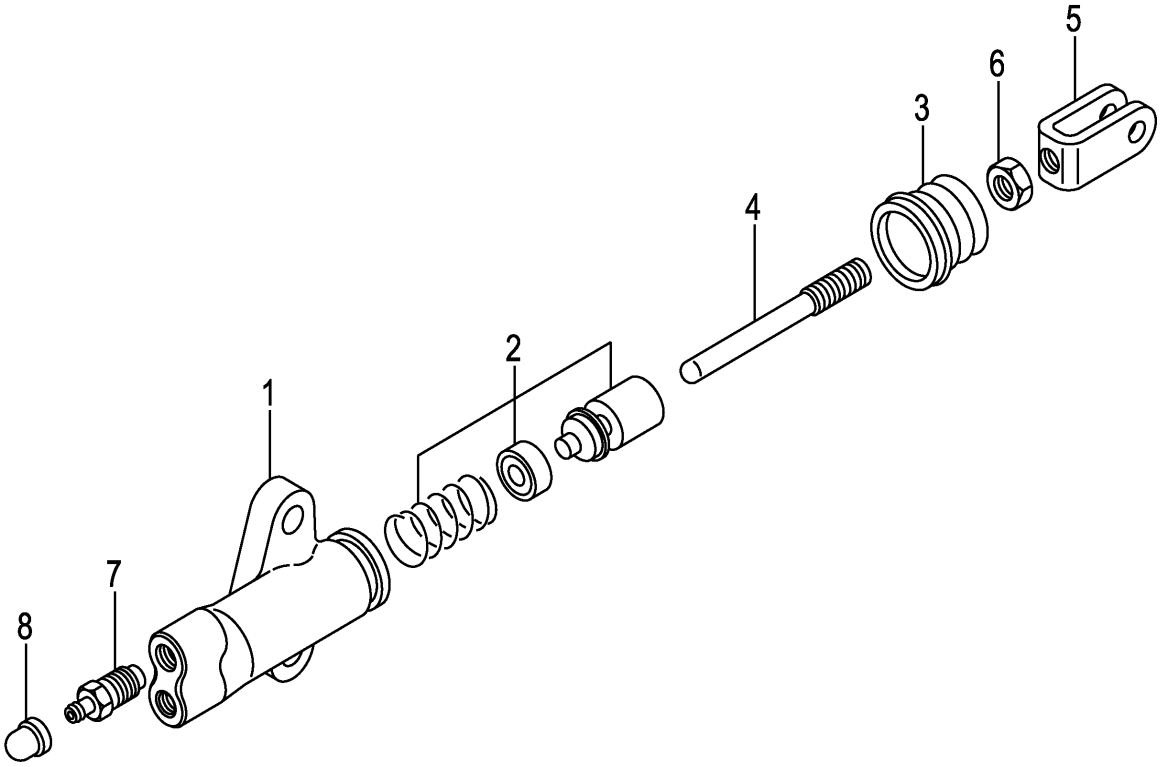

A:FD20C3Z FD25C3Z

Item No	Part No.	Mark	Description		Req'd	Remarks : Serial No.
A1	214A5-32312		CYL-ASSY,CLUTCH-RELEASE	クラッチリリースシリンダアッセン	1	INC.1-8
901	214A5-33012	K1	KIT,REPAIR	リペアキット	1	INC.2,3
1	NO PART NO.	#	BODY,CYL	ボディ	1	
2	NO PART NO.	#*	PISTON	ピストン	1	
3	NO PART NO.	#*	BOOT	ブーツ	1	
A2	214A5-33052		ROD-ASSY,PUSH	プッシュロッドアッセン	1	INC.4-6
4	214A5-33062		ROD,PUSH	ロッド	1	
5	25595-42452		CLEVIS	クレビス	1	
6	01402-00008		NUT	ナット	1	
7	214A5-33031		VALVE,BLEEDER	バルブ	1	
8	214A5-33041		CAP,BLEEDER	キャップ	1	

FIG.115 BRAKE LEVER

(F7Z25510) ﾌﾞﾚｰｷﾚﾊﾞｰ

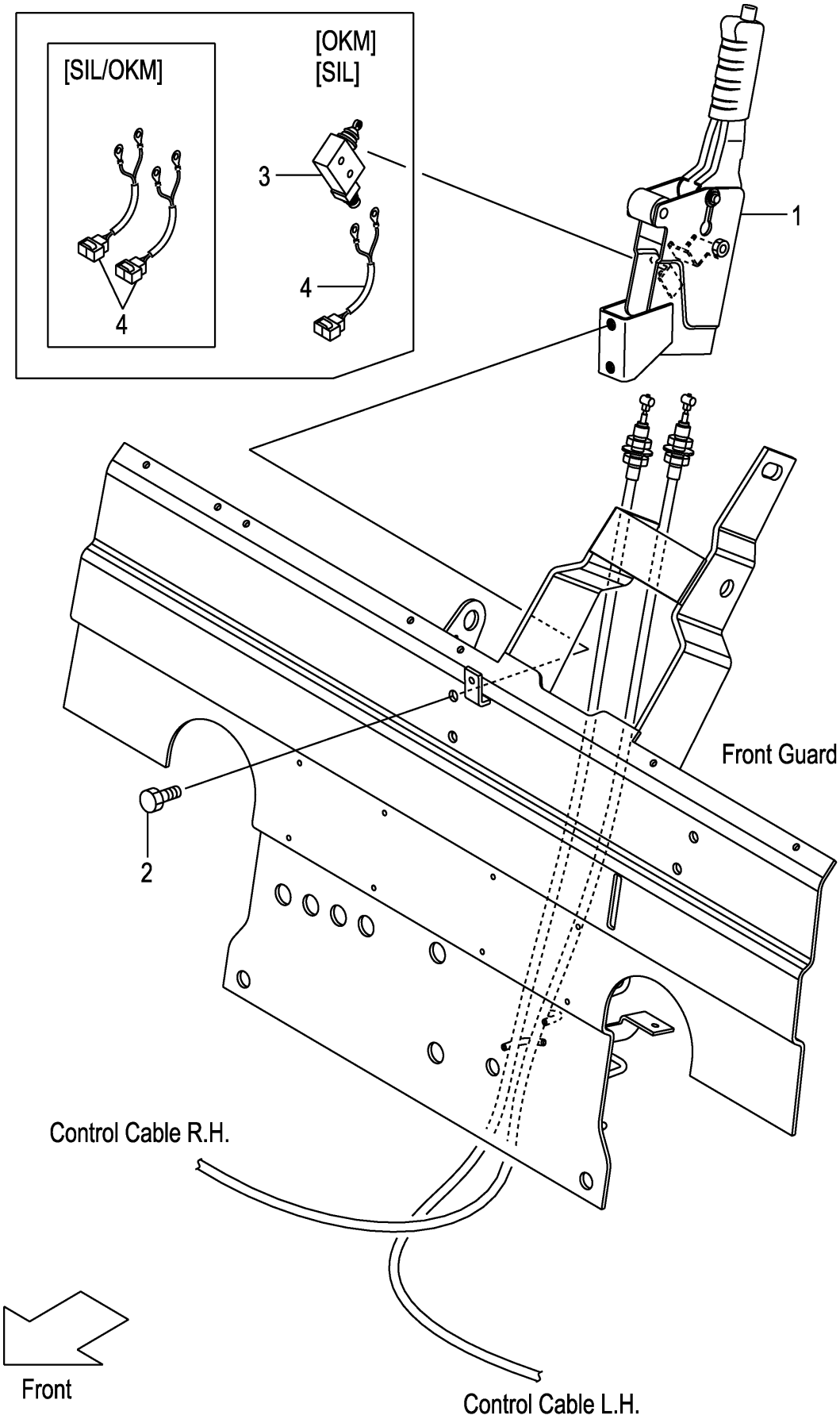

A:FD20C3Z FD20T3Z FD25C3Z FD25T3Z

Item No	Part No.	Mark	Description		Req'd	Remarks : Serial No.
1	22N55-50101		LEVER,PARKING-BRAKE	ﾚﾊﾞｰ	1	
2	01184-10050		BOLT	ﾎﾞﾙﾄ	2	1-109
-	01184-10025		BOLT	ﾎﾞﾙﾄ	2	110-
3	27912-62441		SWITCH,MICRO	ｽｲｯﾁ	1	[OKM][SIL][SIL/OKM]
4	535H3-82261		WIRE-HARNESS,SWITCH	ﾜｲﾔﾊｰﾈｽ	1	1-109
						[OKM][SIL]
-	278M2-42061		WIRE-HARNESS,SWITCH	ﾜｲﾔﾊｰﾈｽ	1	110-
						[OKM][SIL]
-	278M2-42061		WIRE-HARNESS,SWITCH	ﾜｲﾔﾊｰﾈｽ	2	[SIL/OKM]

FIG.116 FRAME

(F7Z26110) フレーム

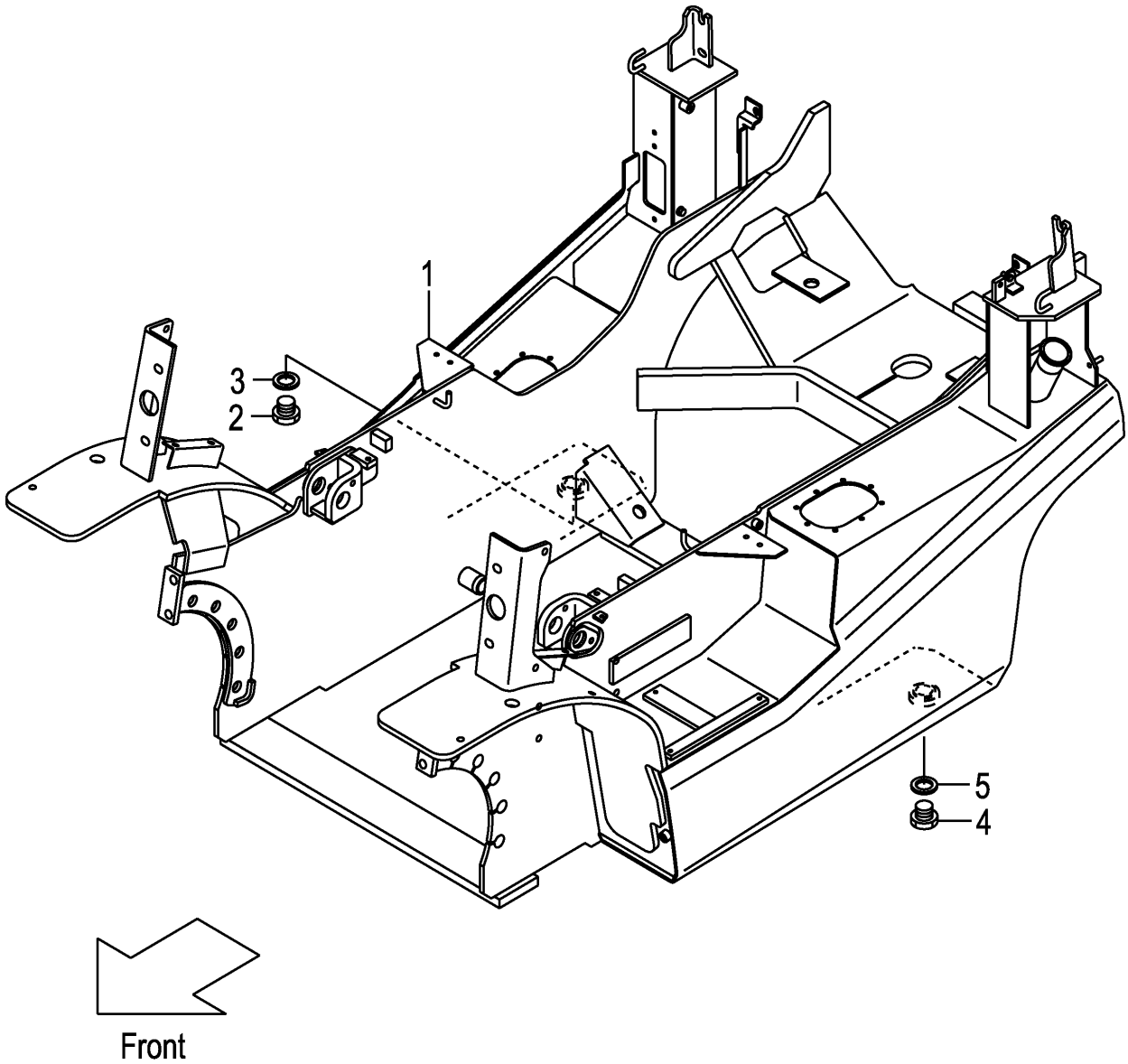

FIG.116

(F7Z26110)

A:FD20C3Z FD20T3Z FD25C3Z FD25T3Z

Item No	Part No.	Mark	Description		Req'd	Remarks : Serial No.
1	NO PART NO.	#	FRAME	ﾌﾚｰﾑ	1	
2	21237-52051		PLUG,DRAIN	ﾌﾟﾗｸﾞ	1	
3	21237-52062		PACKING	ﾊﾟｯｷﾝｸﾞ	1	
4	21237-52051		PLUG,DRAIN	ﾌﾟﾗｸﾞ	1	
5	21237-52062		PACKING	ﾊﾟｯｷﾝｸﾞ	1	

FIG.117 OIL TANK

(F7Z26120) オイルタンク

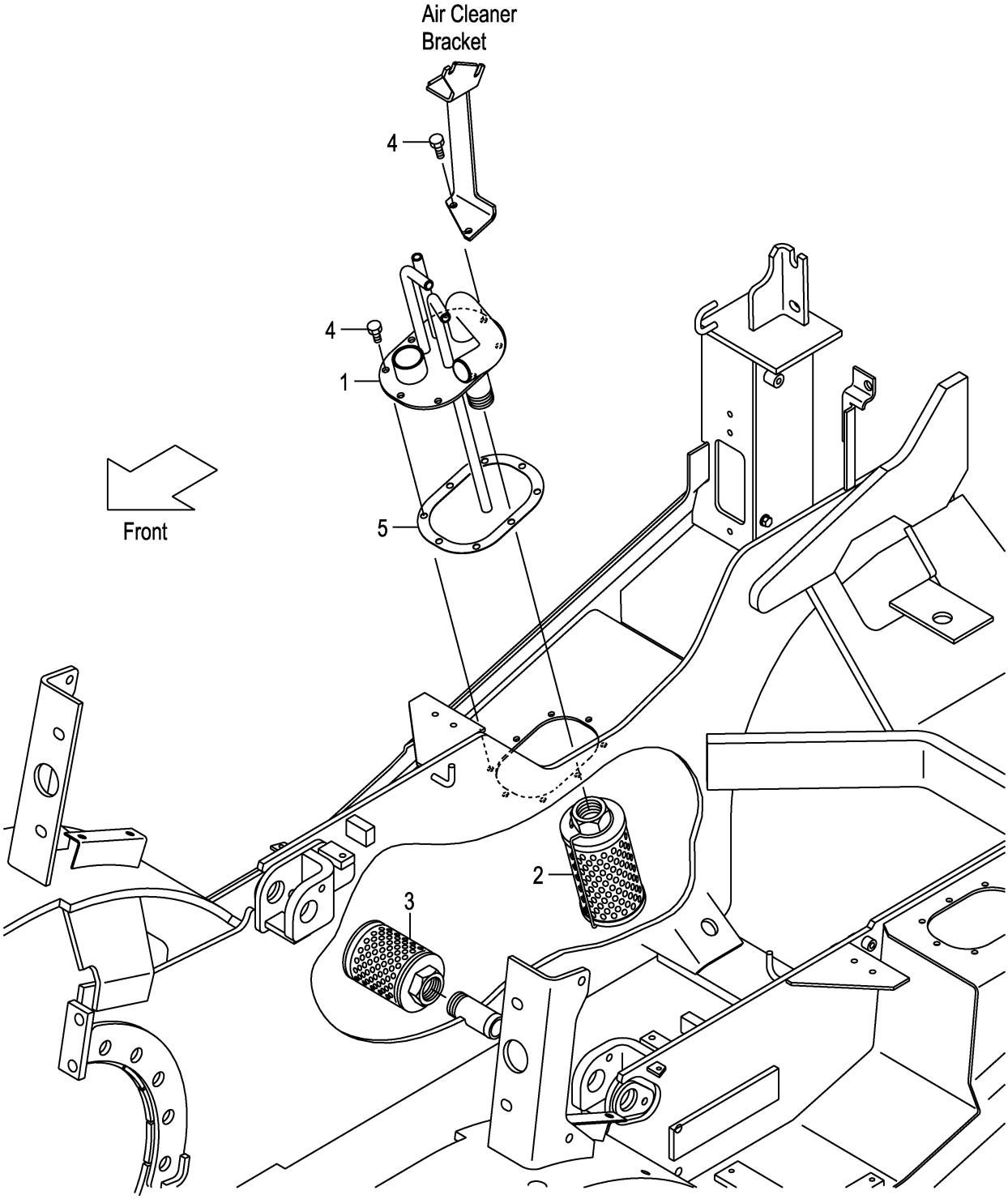

FIG.117

(F7Z26120)

A:FD20C3Z FD20T3Z FD25C3Z FD25T3Z

Item No	Part No.	Mark	Description		Req'd	Remarks : Serial No.
1	22N57-52302		PIPE,RETURN	ﾊﾟｲﾌﾟ	1	
2	271A7-52301		FILTER,RETURN	ﾌｨﾙﾀ	1	
3	216G7-52051		FILTER,SUCTION	ﾌｨﾙﾀ	1	
4	229F2-22151		BOLT	ﾎﾞﾙﾄ	8	
5	22N52-22201		PACKING	ﾊﾟｯｷﾝｸﾞ	1	

FIG.118 OIL CAP & LEVEL

(F7Z26130) オイルキャップ&レベル

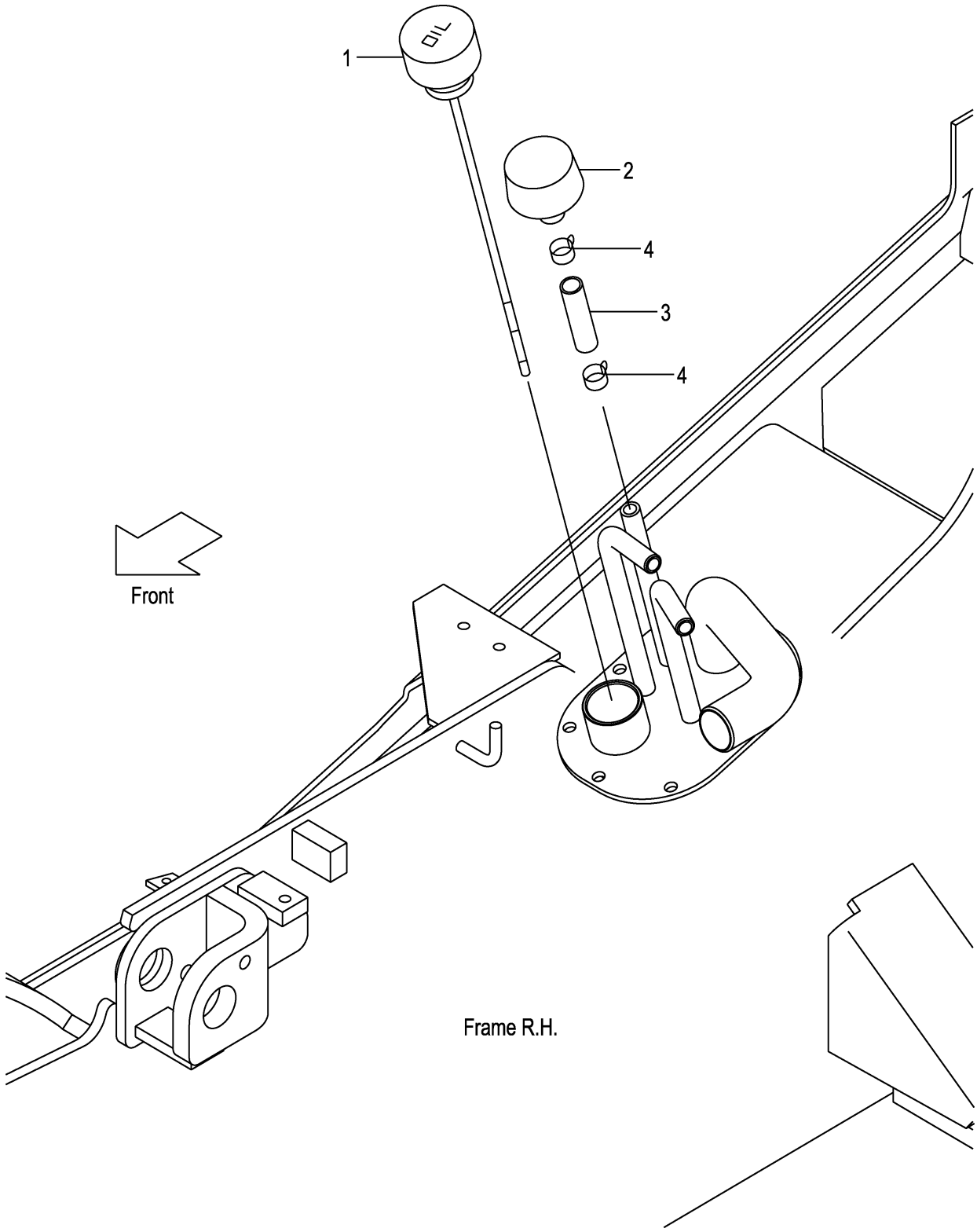

FIG.118

(F7Z26130)

A:FD20C3Z FD20T3Z FD25C3Z FD25T3Z

Item No	Part No.	Mark	Description		Req'd	Remarks : Serial No.
1	22N57-52101		CAP,OIL	ｷｬｯﾌﾟ	1	1-109
-	22N57-52102		CAP,OIL	ｷｬｯﾌﾟ	1	110-
2	216G7-52201		CAP,BREATHER	ｷｬｯﾌﾟ	1	
3	04710-04005		HOSE	ﾎｰｽ	1	
4	04914-00019		CLIP	ｸﾘｯﾌﾟ	2	

FIG.119 FUEL TANK

(F7Z26150) フューエルタンク

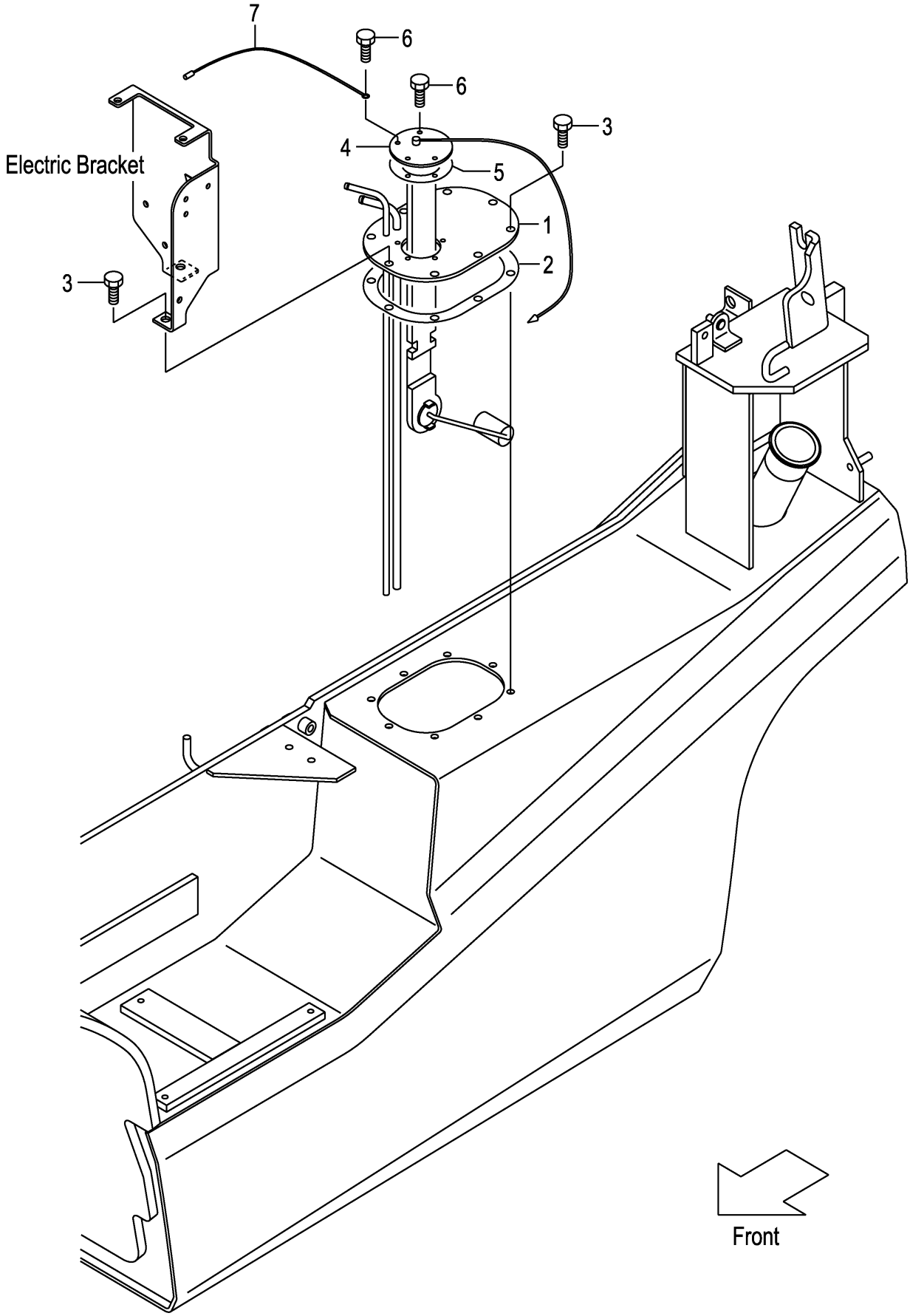

FIG.119

(F7Z26150)

A:FD20C3Z FD20T3Z FD25C3Z FD25T3Z

Item No	Part No.	Mark	Description		Req'd	Remarks : Serial No.
1	22N52-22101		PLATE,FUEL-TOP	ﾌﾟﾚｰﾄ	1	
2	22N52-22201		PACKING	ﾊﾟｯｷﾝｸﾞ	1	
3	229F2-22151		BOLT	ﾎﾞﾙﾄ	8	
4	222A2-22061		GAUGE,FUEL	ｹﾞｰｼﾞ	1	
5	229F2-22071		GASKET	ｶﾞｽｹｯﾄ	1	
6	229F2-22171		BOLT	ﾎﾞﾙﾄ	5	
7	25592-42121		WIRE	ﾜｲﾔ	1	

FIG.120 BALANCE WEIGHT

(F7Z26310) ﾊﾞﾗﾝｽｳｴｲﾄ

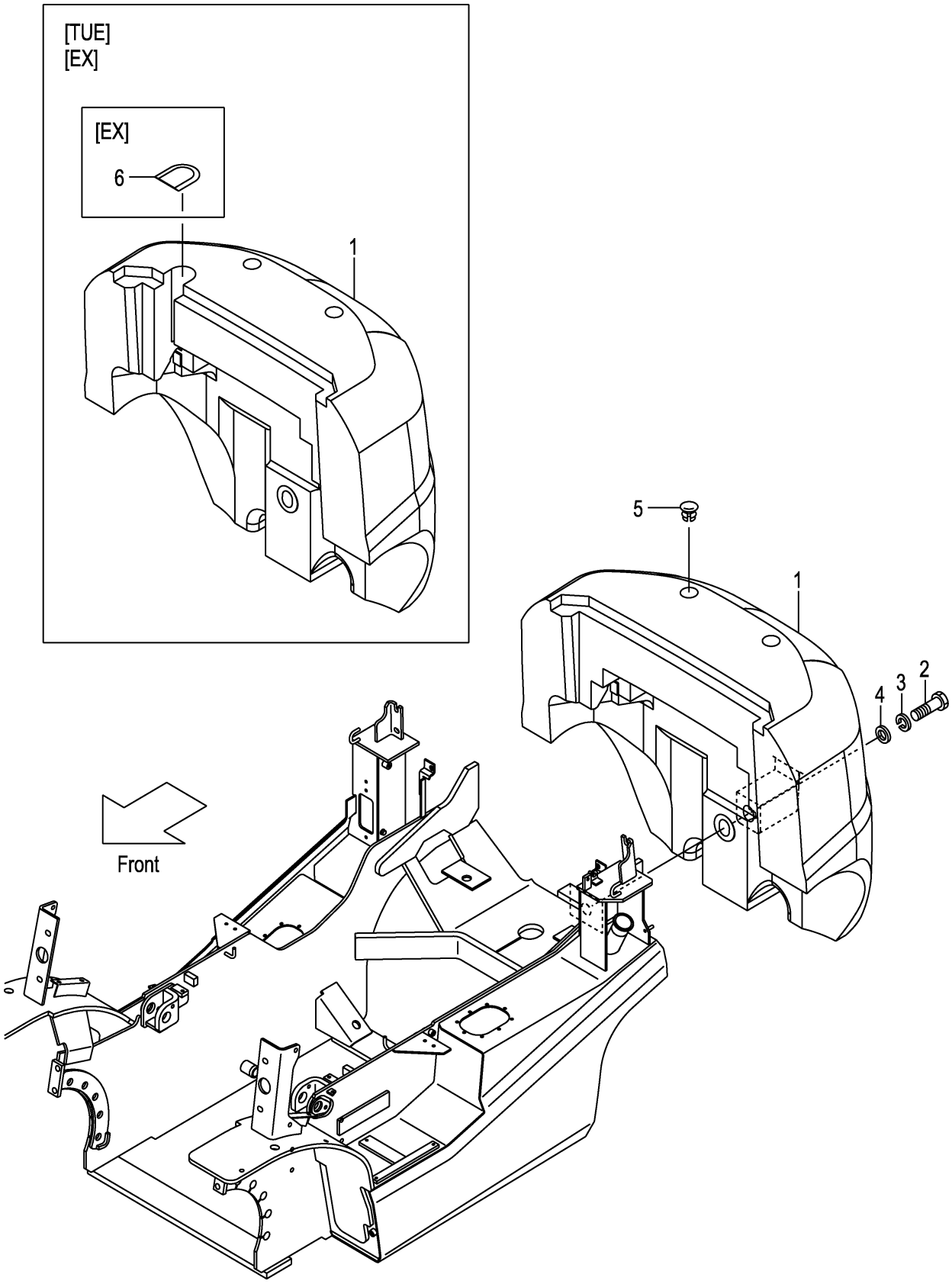

FIG.120

(F7Z26310)

A:FD20C3Z FD20T3Z
B:FD25C3Z FD25T3Z

Item No	Part No.	Mark	Description		Req'd	Remarks : Serial No.
1	NO PART NO.	#	WEIGHT,BALANCE,2.0	ｳｴｲﾄ	1	A
-	NO PART NO.	#	WEIGHT,BALANCE,2.5	ｳｴｲﾄ	1	B
2	01110-30150		BOLT	ﾎﾞﾙﾄ	1	
3	02010-00030		WASHER	ﾜｯｼｬ	1	
4	234A6-32001		WASHER	ﾜｯｼｬ	1	
5	22N56-32041		CAP	ｷｬｯﾌﾟ	2	
6	516G2-72051		COVER	ｶﾊﾞｰ	1	[EX]

FIG.121 BALANCE WEIGHT [HC]

(F7Z26320) ﾊﾞﾗﾝｽｳｴｲﾄ

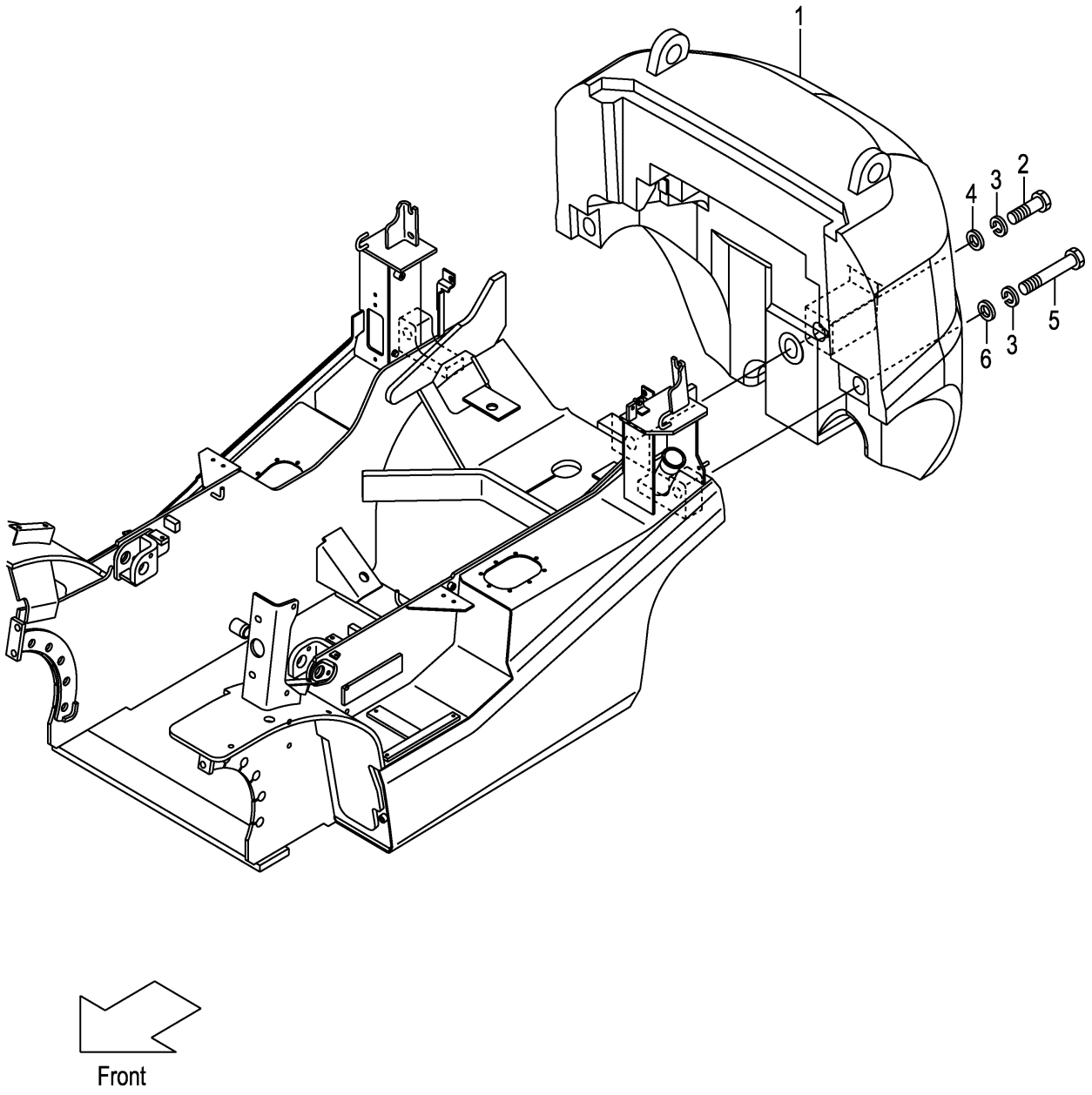

A:FD20C3Z FD20T3Z
B:FD25C3Z FD25T3Z

Item No	Part No.	Mark	Description		Req'd	Remarks : Serial No.
1	NO PART NO.	#	WEIGHT,BALANCE,2.0	ｳｴｲﾄ	1	A [HC]
-	NO PART NO.	#	WEIGHT,BALANCE,2.5	ｳｴｲﾄ	1	B [HC]
2	01110-30150		BOLT	ﾎﾞﾙﾄ	1	[HC]
3	02010-00030		WASHER	ﾜｯｼｬ	3	[HC]
4	234A6-32001		WASHER	ﾜｯｼｬ	1	[HC]
5	01113-30200		BOLT	ﾎﾞﾙﾄ	2	A [HC]
-	01113-30250		BOLT	ﾎﾞﾙﾄ	2	B [HC]
6	225R6-32001		WASHER	ﾜｯｼｬ	2	[HC]
7	225R9-12101	+	DECAL,HOOK-CAUTION	ﾃﾞｶﾙ	1	[HC]

FIG.122 FRONT GUARD

(F7Z26410) ﾌﾛﾝﾄｶﾞｰﾄﾞ

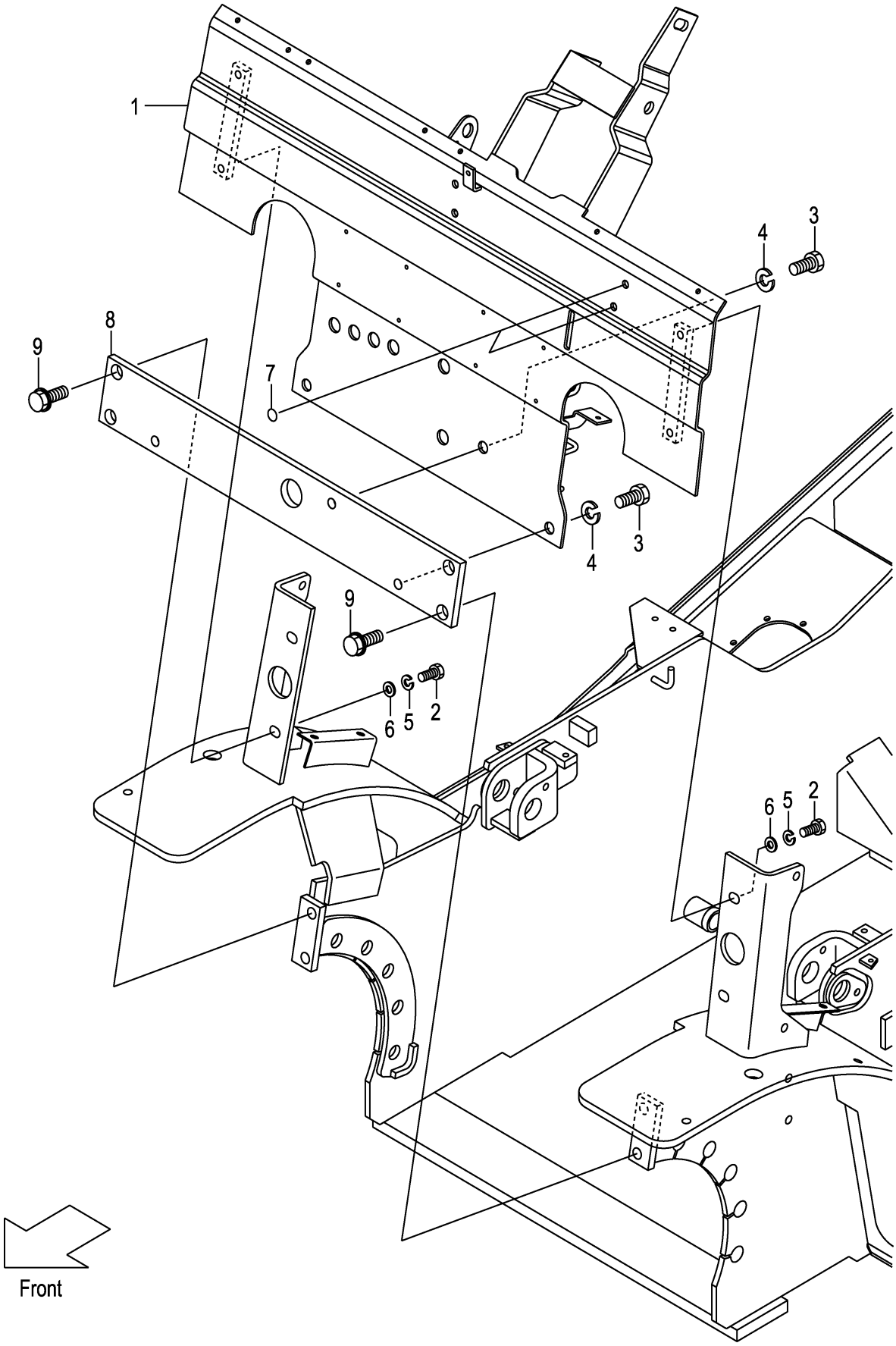

FIG.122

(F7Z26410)

A:FD20C3Z FD20T3Z FD25C3Z FD25T3Z

Item No	Part No.	Mark	Description		Req'd	Remarks : Serial No.
1	22N56-40101		GUARD,FRONT	ｶﾞｰﾄﾞ	1	
2	01186-12025		BOLT	ﾎﾞﾙﾄ	4	
-	01109-12025		BOLT,STAINLESS	ﾎﾞﾙﾄ	4	[FC]
3	01100-16020		BOLT	ﾎﾞﾙﾄ	3	
4	02010-00016		WASHER	ﾜｯｼｬ	3	
5	02013-00012		WASHER	ﾜｯｼｬ	4	[FC]
6	02001-00012		WASHER	ﾜｯｼｬ	4	[FC]
7	22N55-13181		SEAL,PANEL-COVER	ｼｰﾙ	2	
8	22N56-42041		PLATE,FRONT	ﾌﾟﾚｰﾄ	1	
9	216G6-43561		BOLT,FLANGE	ﾎﾞﾙﾄ	4	

FIG.123 BONNET

(F7Z26420) ﾎﾞﾝﾈｯﾄ

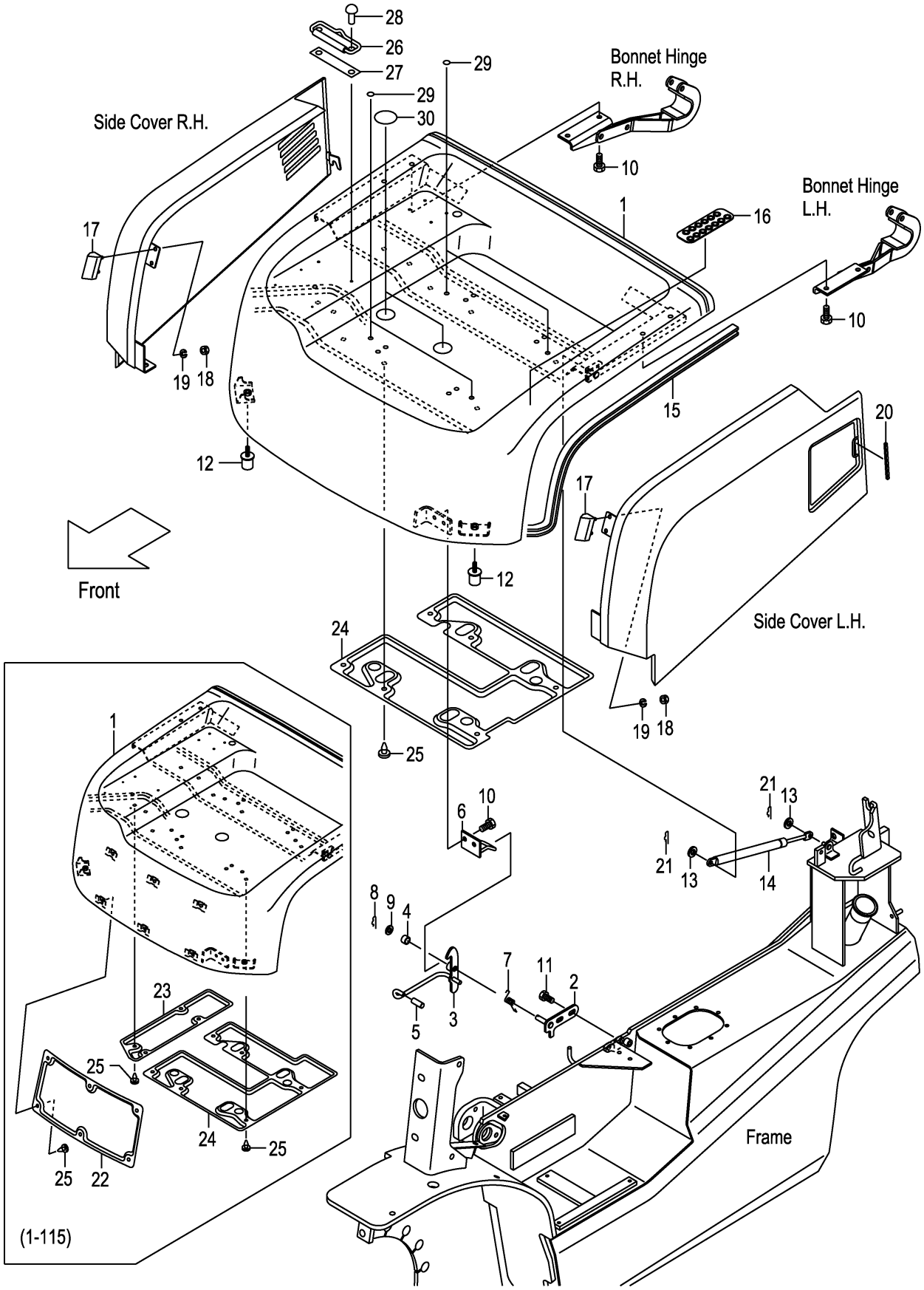

A:FD20C3Z FD20T3Z FD25C3Z FD25T3Z

Item No	Part No.	Mark	Description		Req'd	Remarks : Serial No.
1	22N56-40202		BONNET	ﾎﾞﾝﾈｯﾄ	1	1-115
-	22N56-40203		BONNET	ﾎﾞﾝﾈｯﾄ	1	116-
-	52N55-30401		BONNET	ﾎﾞﾝﾈｯﾄ	1	1-115 [SCB001][SCBCR]
-	52N55-30402		BONNET	ﾎﾞﾝﾈｯﾄ	1	116- [SCB001][SCBCR]
-	52N59-20411		BONNET	ﾎﾞﾝﾈｯﾄ	1	1-115 [TOB]
-	52N59-20412		BONNET	ﾎﾞﾝﾈｯﾄ	1	116- [TOB]
A1	243C6-40021		CATCH-ASSY,BONNET	ﾎﾞﾝﾈｯﾄｷｬｯﾁｱｯｾﾝ	1	INC.2-9
2	NO PART NO.	#	BRACKET,BONNET-CATCH	ﾌﾞﾗｹｯﾄ	1	
3	NO PART NO.	#	LATCH	ﾗｯﾁ	1	
4	23655-22101		BUSHING	ﾌﾞｯｼﾝｸﾞ	1	
5	216G6-52291		CAP	ｷｬｯﾌﾟ	1	
6	216G6-42451		HOOK	ﾌｯｸ	1	
7	216G6-42481		SPRING	ｽﾌﾟﾘﾝｸﾞ	1	
8	216H5-42141		PIN,SNAP	ﾋﾟﾝ	1	
9	02000-00010		WASHER	ﾜｯｼｬ	1	
10	01183-08016		BOLT	ﾎﾞﾙﾄ	6	
11	01185-08016		BOLT	ﾎﾞﾙﾄ	2	
12	22N56-43051		RUBBER,STOPPER	ﾗﾊﾞｰ	2	
13	02000-00008		WASHER	ﾜｯｼｬ	2	
14	22N56-43041		SPRING,GAS	ｽﾌﾟﾘﾝｸﾞ	1	
15	22N56-40361		RUBBER,SEAL,BONNET	ﾗﾊﾞｰ	1	
16	22N56-43221		RUBBER	ﾗﾊﾞｰ	1	
17	22N56-43281		STOPPER,BONNET	ｽﾄｯﾊﾟ	2	
18	01400-00006		NUT	ﾅｯﾄ	4	
19	02010-00006		WASHER	ﾜｯｼｬ	4	
20	22N56-43271		RUBBER	ﾗﾊﾞｰ	1	
21	216H3-92171		PIN,SNAP	ﾋﾟﾝ	2	
22	22N56-40451		INSULATOR,A	ｲﾝｼｭﾚｰﾀ	1	1-115
23	22N56-40461		INSULATOR,B	ｲﾝｼｭﾚｰﾀ	1	1-115
24	22N56-40471		INSULATOR,C	ｲﾝｼｭﾚｰﾀ	1	
25	216G6-42541		CLIP	ｸﾘｯﾌﾟ	16	1-115
-	216G6-42541		CLIP	ｸﾘｯﾌﾟ	6	116-
26	25599-32001		BINDER	ﾊﾞｲﾝﾀﾞ	1	
27	25599-32021		SHEET,BINDER	ｼｰﾄ	1	
28	22256-42001		RIVET	ﾘﾍﾞｯﾄ	2	
29	22N56-43531		SEAL,PANEL-COVER	ｼｰﾙ	6	
30	22N56-43541		SEAT,BONNET	ｼｰﾄ	2	

FIG.124 RADIATOR COVER

(F7Z26430) ﾗｼﾞｴｰﾀｶﾊﾞｰ

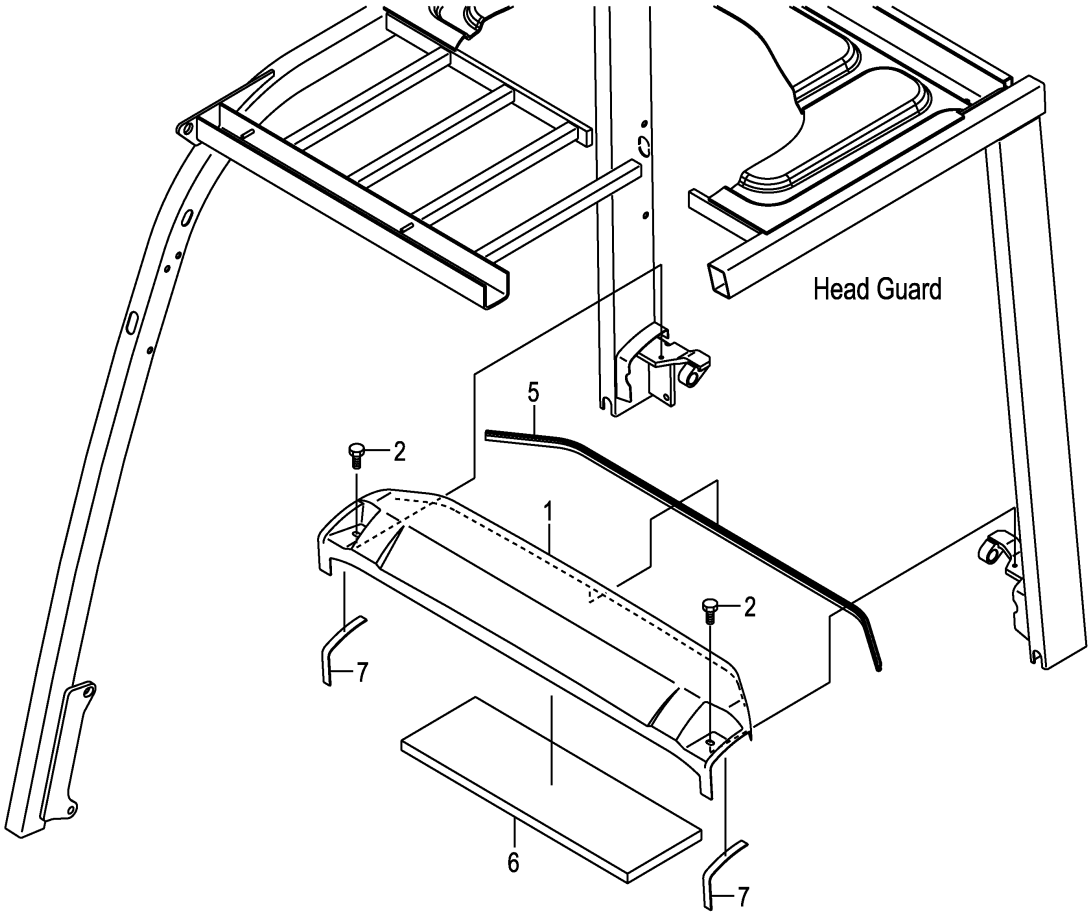

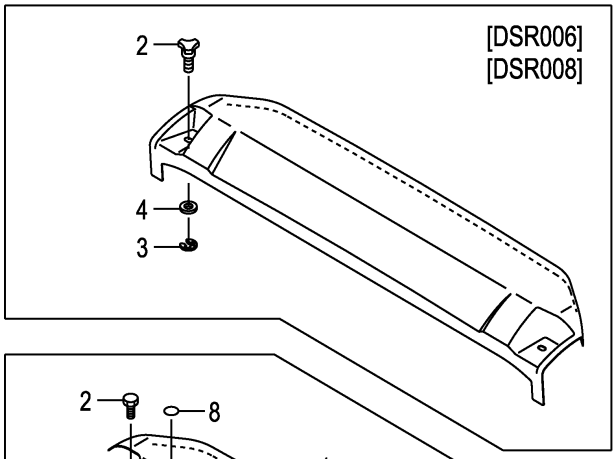

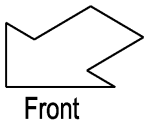

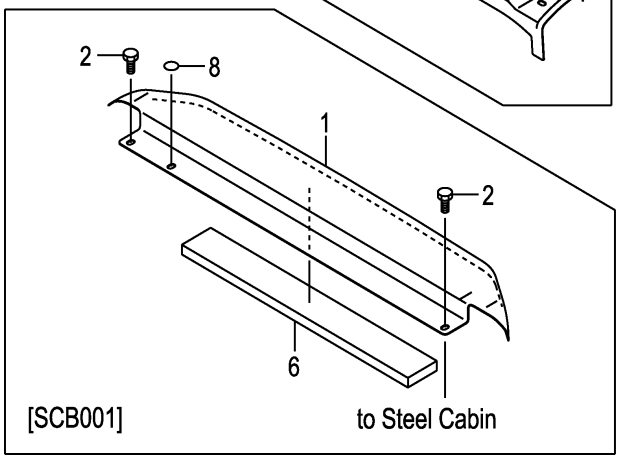

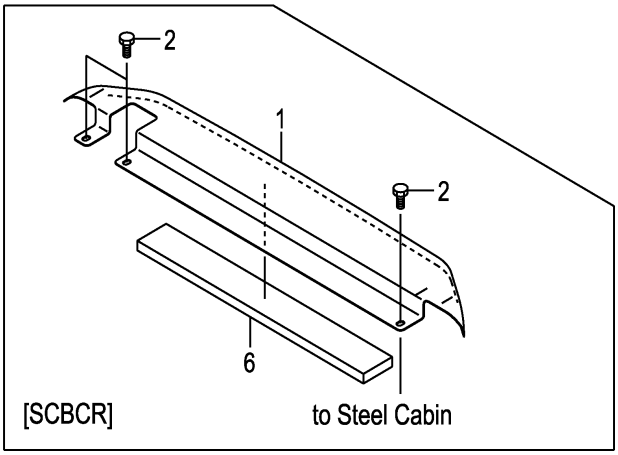

FIG.124

(F7Z26430)

A:FD20C3Z FD20T3Z FD25C3Z FD25T3Z

Item No	Part No.	Mark	Description		Req'd	Remarks : Serial No.
1	22N56-40302		COVER,RADIATOR	ｶﾊﾞｰ	1	
-	52N55-40211		COVER,RADIATOR	ｶﾊﾞｰ	1	[AW061]
-	52N55-30451		COVER,RADIATOR	ｶﾊﾞｰ	1	[SCB001]
-	52N57-60451		COVER,RADIATOR	ｶﾊﾞｰ	1	[SCBCR]
2	01181-08016		BOLT	ﾎﾞﾙﾄ	2	
-	01181-08016		BOLT	ﾎﾞﾙﾄ	3	[SCBCR]
-	222A6-42451		BOLT,KNOB	ﾎﾞﾙﾄ	2	[DSR006][DSR008]
3	222A6-42461		E-RING	Eﾘﾝｸﾞ	2	[DSR006][DSR008]
4	02000-00008		WASHER	ﾜｯｼｬ	2	[DSR006][DSR008]
5	22N56-40371		SEAL,RUBBER	ｼｰﾙ	1	
6	22N56-40401		RUBBER,RAD-COVER	ﾗﾊﾞｰ	1	
-	52N55-32171		RUBBER,RAD-COVER	ﾗﾊﾞｰ	1	[SCB001][SCBCR]
7	234A6-43121		RUBBER	ﾗﾊﾞｰ	2	(WITHOUT SCB001,SCBCR)
8	22N56-43531		SEAL,PANEL-COVER	ｼｰﾙ	1	[SCB001]

FIG.125 BONNET HINGE

(F7Z26440) ﾎﾞﾝﾈｯﾄﾋﾝｼﾞ

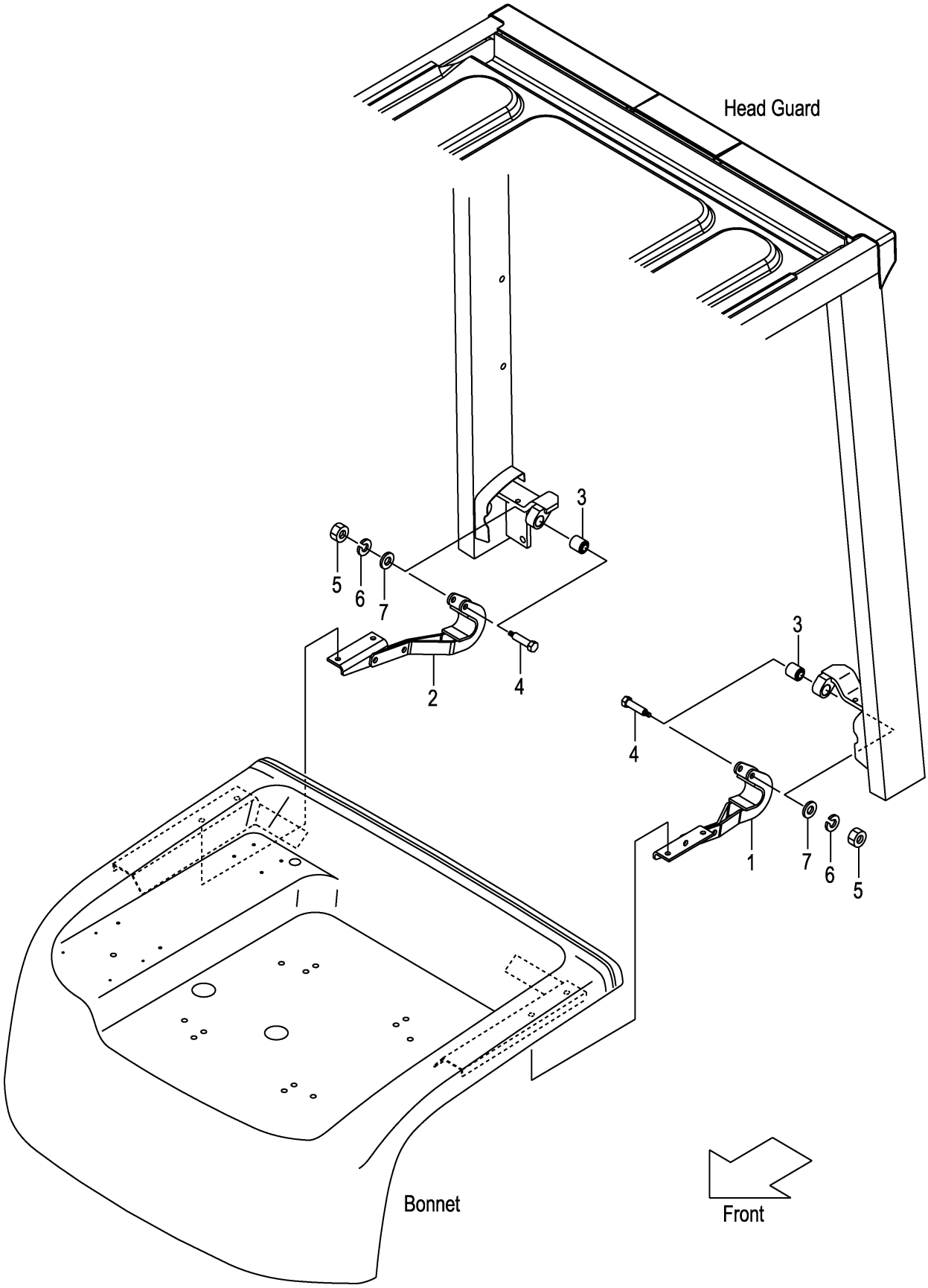

FIG.125

(F7Z26440)

A:FD20C3Z FD20T3Z FD25C3Z FD25T3Z

Item No	Part No.	Mark	Description		Req'd	Remarks : Serial No.
1	22N56-42602		HINGE,LH	ﾋﾝｼﾞ	1	
2	22N56-42612		HINGE,RH	ﾋﾝｼﾞ	1	
3	216G6-42921		BUSHING	ﾌﾞｯｼﾝｸﾞ	2	
4	216G6-42931		BOLT	ﾎﾞﾙﾄ	2	
5	01400-00006		NUT	ﾅｯﾄ	2	
6	02010-00006		WASHER	ﾜｯｼｬ	2	
7	02000-00006		WASHER	ﾜｯｼｬ	2	

FIG.126 FLOOR BOARD

(F7Z26450) フロアボード

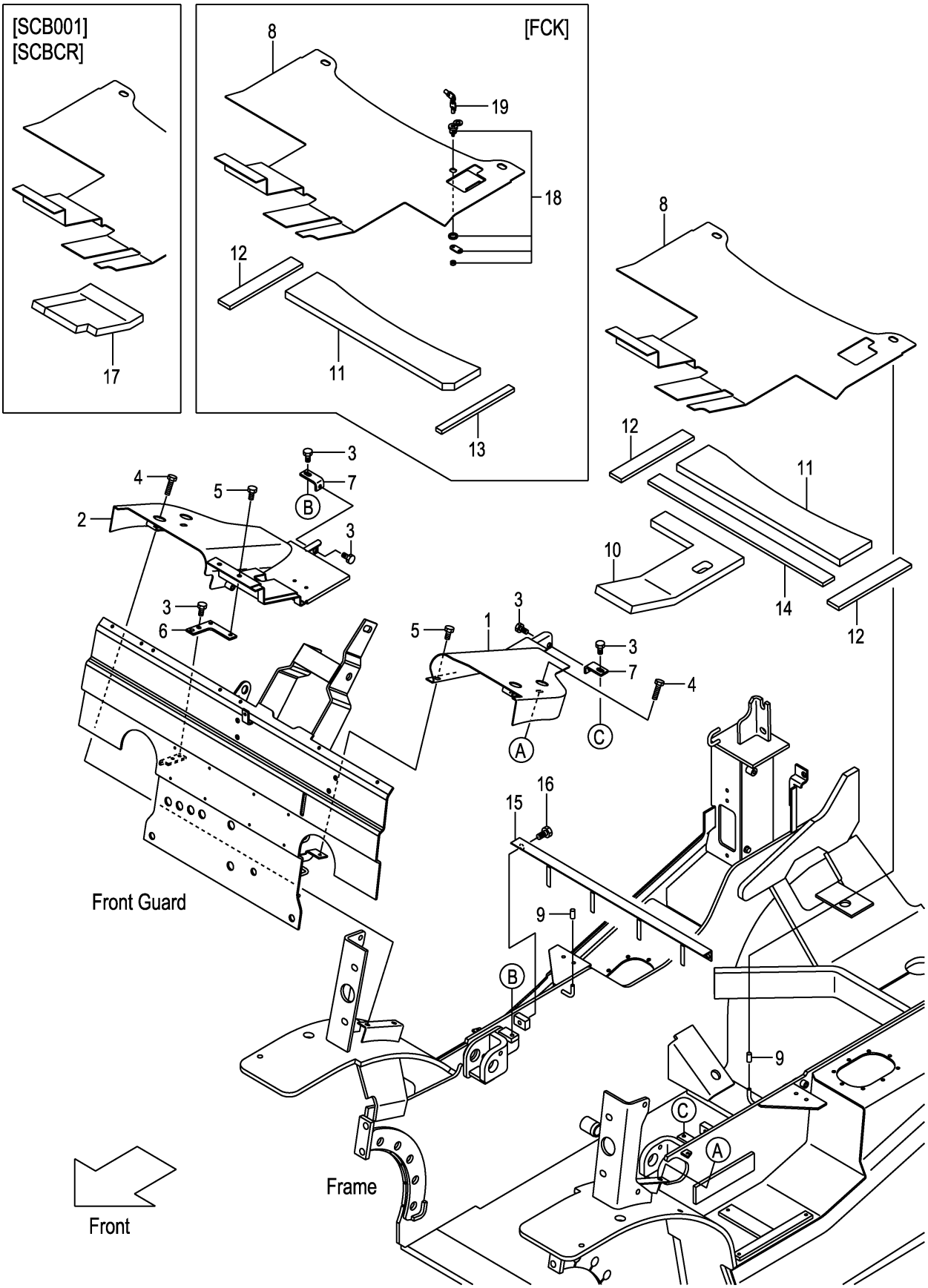

A:FD20C3Z FD20T3Z FD25C3Z FD25T3Z

Item No	Part No.	Mark	Description		Req'd	Remarks : Serial No.
1	22N56-50201		COVER,LH	ｶﾊﾞｰ	1	
2	22N56-50211		COVER,RH	ｶﾊﾞｰ	1	1-112
-	22N56-50212		COVER,RH	ｶﾊﾞｰ	1	113-
3	01185-08016		BOLT	ﾎﾞﾙﾄ	6	
4	01185-08030		BOLT	ﾎﾞﾙﾄ	4	
5	273A6-42471		BOLT	ﾎﾞﾙﾄ	3	
6	22N56-52251		BRACKET	ﾌﾞﾗｹｯﾄ	1	
7	22N56-52241		BRACKET	ﾌﾞﾗｹｯﾄ	2	
8	22N56-52201		BOARD,FLOOR	ﾎﾞｰﾄﾞ	1	
-	52N58-10201		BOARD,FLOOR	ﾎﾞｰﾄﾞ	1	[FCK]
9	216G6-52291		CAP	ｷｬｯﾌﾟ	2	
10	22N56-52222		RUBBER,FLOOR-BOARD	ﾗﾊﾞｰ	1	
11	22N56-52231		RUBBER,FLOOR-BOARD	ﾗﾊﾞｰ	1	
-	52N58-12201		RUBBER,FLOOR-BOARD	ﾗﾊﾞｰ	1	[FCK]
12	22N56-52351		RUBBER	ﾗﾊﾞｰ	2	
-	22N56-52351		RUBBER	ﾗﾊﾞｰ	1	[FCK]
13	216G6-52161		RUBBER	ﾗﾊﾞｰ	1	[FCK]
14	22N56-52361		RUBBER	ﾗﾊﾞｰ	1	
15	22N56-52402		ANGLE	ｱﾝｸﾞﾙ	1	
16	01185-10016		BOLT	ﾎﾞﾙﾄ	2	
17	52N55-32331		RUBBER,FLOOR-BOARD	ﾗﾊﾞｰ	1	[SCB001][SCBCR]
A1	52N58-10301		LOCK-ASSY,COIN	ｺｲﾝﾛｯｸｱｯｾﾝ	1	[FCK] INC.18,19
18	52N58-12501		CYL,KEY	ｼﾘﾝﾀﾞ	1	[FCK]
19	52N58-12511		KEY	ｷｰ	1	[FCK](1SET=2PCS)

FIG.127 STEP & FLOOR MAT

(F7Z26460) ｽﾃｯﾌﾟ&ﾌﾛｱﾏｯﾄ

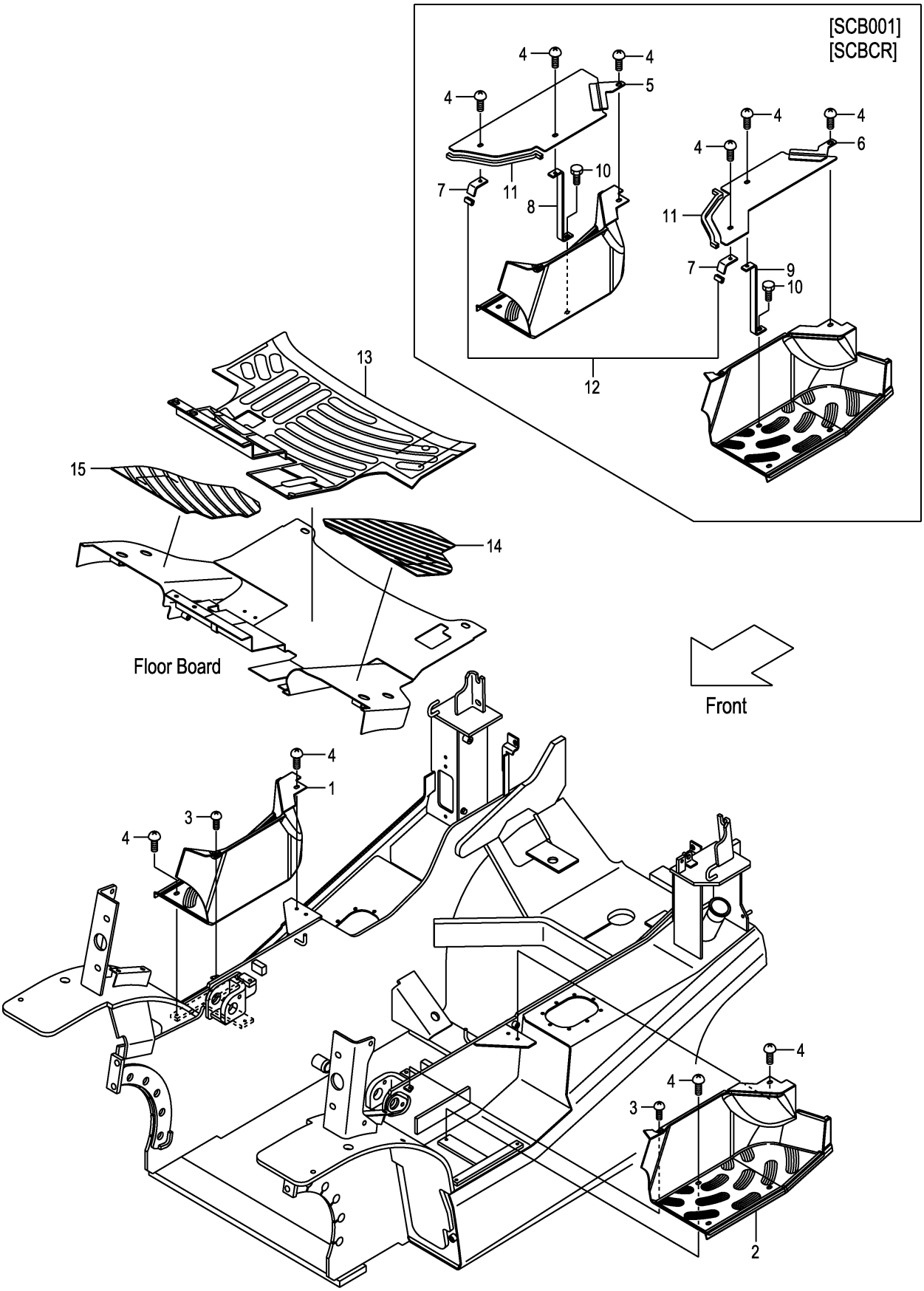

A:FD20C3Z FD20T3Z FD25C3Z FD25T3Z

Item No	Part No.	Mark	Description		Req'd	Remarks : Serial No.
1	22N56-42901		COVER,STEP,RH	ｶﾊﾞｰ	1	(WITHOUT HR)
-	52N55-42601		COVER,STEP,RH	ｶﾊﾞｰ	1	[AW061]
2	22N56-42911		COVER,STEP,LH	ｶﾊﾞｰ	1	
-	52N55-42611		COVER,STEP,LH	ｶﾊﾞｰ	1	[AW061]
3	214A6-42771		SCREW	ｽｸﾘｭ	2	
-	214A6-42771		SCREW	ｽｸﾘｭ	1	[HR]
4	278M6-42031		SCREW	ｽｸﾘｭ	8	
-	278M6-42031		SCREW	ｽｸﾘｭ	4	[HR]
-	278M6-42031		SCREW	ｽｸﾘｭ	10	[SCB001][SCBCR]
-	278M6-42031		SCREW	ｽｸﾘｭ	5	[HR/SCB001][HR/SCBCR]
5	52N55-32051		PLATE,STEP,RH	ﾌﾟﾚｰﾄ	1	[SCB001][SCBCR]
						(WITHOUT HR/SCB001,HR/SCBCR)
6	52N55-32061		PLATE,STEP,LH	ﾌﾟﾚｰﾄ	1	[SCB001][SCBCR]
7	52N55-32091		BRACKET	ﾌﾞﾗｹｯﾄ	2	[SCB001][SCBCR]
-	52N55-32091		BRACKET	ﾌﾞﾗｹｯﾄ	1	[HR/SCB001][HR/SCBCR]
8	52N55-32101		BRACKET,RH	ﾌﾞﾗｹｯﾄ	1	[SCB001][SCBCR]
						(WITHOUT HR/SCB001,HR/SCBCR)
9	52N55-32111		BRACKET,LH	ﾌﾞﾗｹｯﾄ	1	[SCB001][SCBCR]
10	216H3-92281		BOLT	ﾎﾞﾙﾄ	2	[SCB001][SCBCR]
-	216H3-92281		BOLT	ﾎﾞﾙﾄ	1	[HR/SCB001][HR/SCBCR]
11	509S3-92261		RUBBER,SEAL	ﾗﾊﾞｰ	2	[SCB001][SCBCR]
-	509S3-92261		RUBBER,SEAL	ﾗﾊﾞｰ	1	[HR/SCB001][HR/SCBCR]
12	209P6-42831		EDGING	ｴｯｼﾞﾝｸﾞ	1	[SCB001][SCBCR]
13	22N56-52302		MAT,FLOOR	ﾏｯﾄ	1	
-	52N58-10311		MAT,FLOOR	ﾏｯﾄ	1	[FCK]
14	22N56-52311		MAT,FLOOR,LH	ﾏｯﾄ	1	
15	22N56-52321		MAT,FLOOR,RH	ﾏｯﾄ	1	

FIG.128 FRONT COVER (CLUTCH)

(F7Z26470) フロントカバー

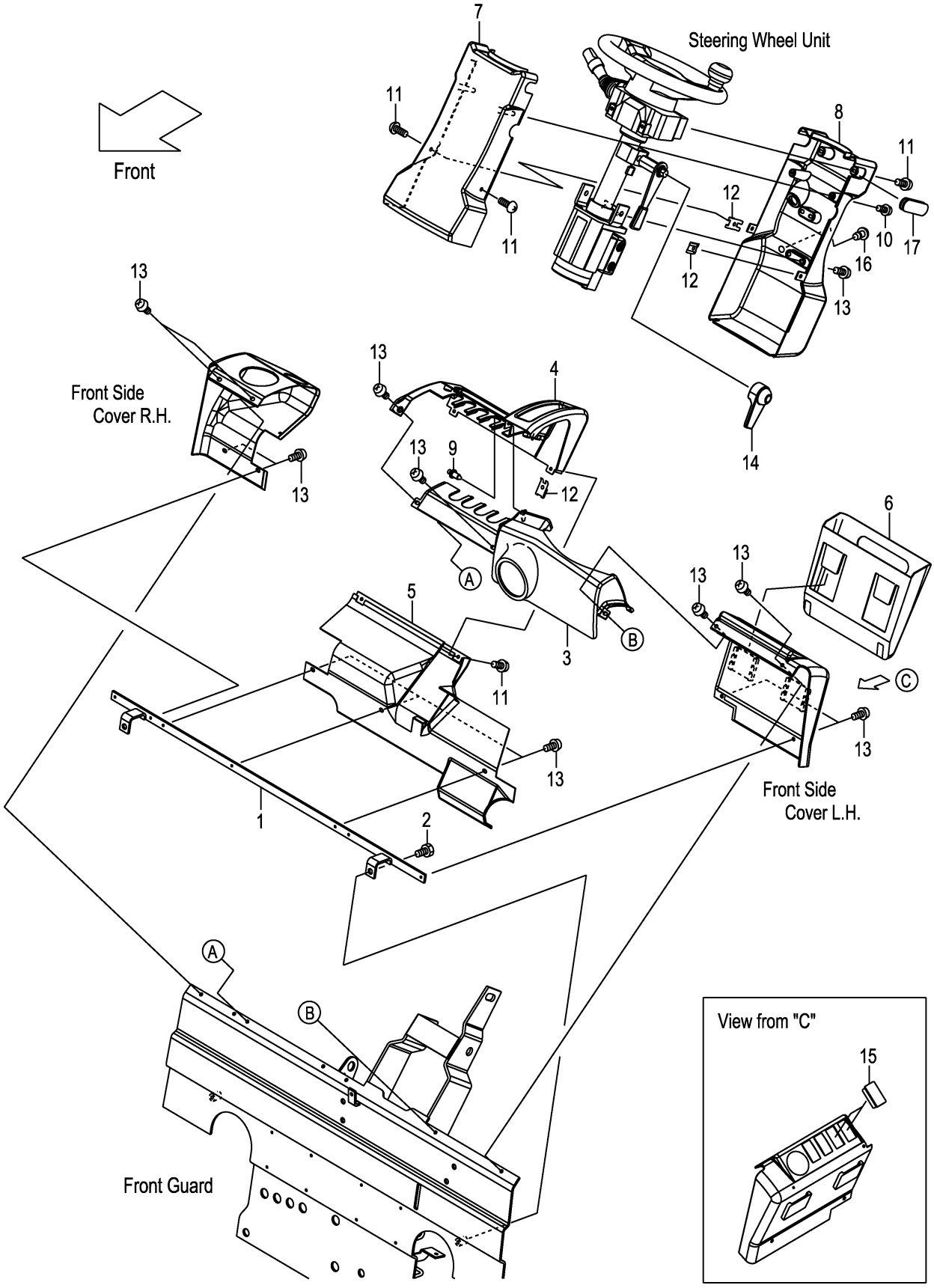

FIG.128
(F7Z26470)

A:FD20C3Z FD25C3Z

Item No	Part No.	Mark	Description		Req'd	Remarks : Serial No.
1	22N56-42861		BRACKET,COVER	ﾌﾞﾗｹｯﾄ	1	
2	01185-08016		BOLT	ﾎﾞﾙﾄ	2	
3	22N56-42741		COVER,FRONT	ｶﾊﾞｰ	1	
4	22N56-42701		COVER,METER-PANEL	ｶﾊﾞｰ	1	
5	22N56-42731		COVER,LOWER	ｶﾊﾞｰ	1	
6	22N56-42751		POCKET,BINDER	ﾎﾟｹｯﾄ	1	
7	22N54-12321		COVER,HANDLE,FRONT	ｶﾊﾞｰ	1	
8	22N54-12311		COVER,HANDLE,REAR	ｶﾊﾞｰ	1	
-	52N57-72001		COVER,HANDLE,REAR	ｶﾊﾞｰ	1	[SWD]
9	22N56-42791		RIVET,PUSH	ﾘﾍﾞｯﾄ	1	
10	222A2-42031		SCREW	ｽｸﾘｭ	2	
11	209K2-43001		SCREW	ｽｸﾘｭ	6	
12	281E6-42521		NUT,SPEED	ﾅｯﾄ	4	
13	225R6-42031		SCREW	ｽｸﾘｭ	15	
14	22N54-12201		COVER,TILT-LOCK	ｶﾊﾞｰ	1	
15	256T2-42121		CAP	ｷｬｯﾌﾟ	2	
16	281E6-42571		PLUG,HOLE	ﾌﾟﾗｸﾞ	1	
17	239A4-12541		GROMMET,HANDLE-COVER	ｸﾞﾛﾒｯﾄ	1	

FIG.129 FRONT COVER (TOR-CON)

(F7Z26480) フロントカバー

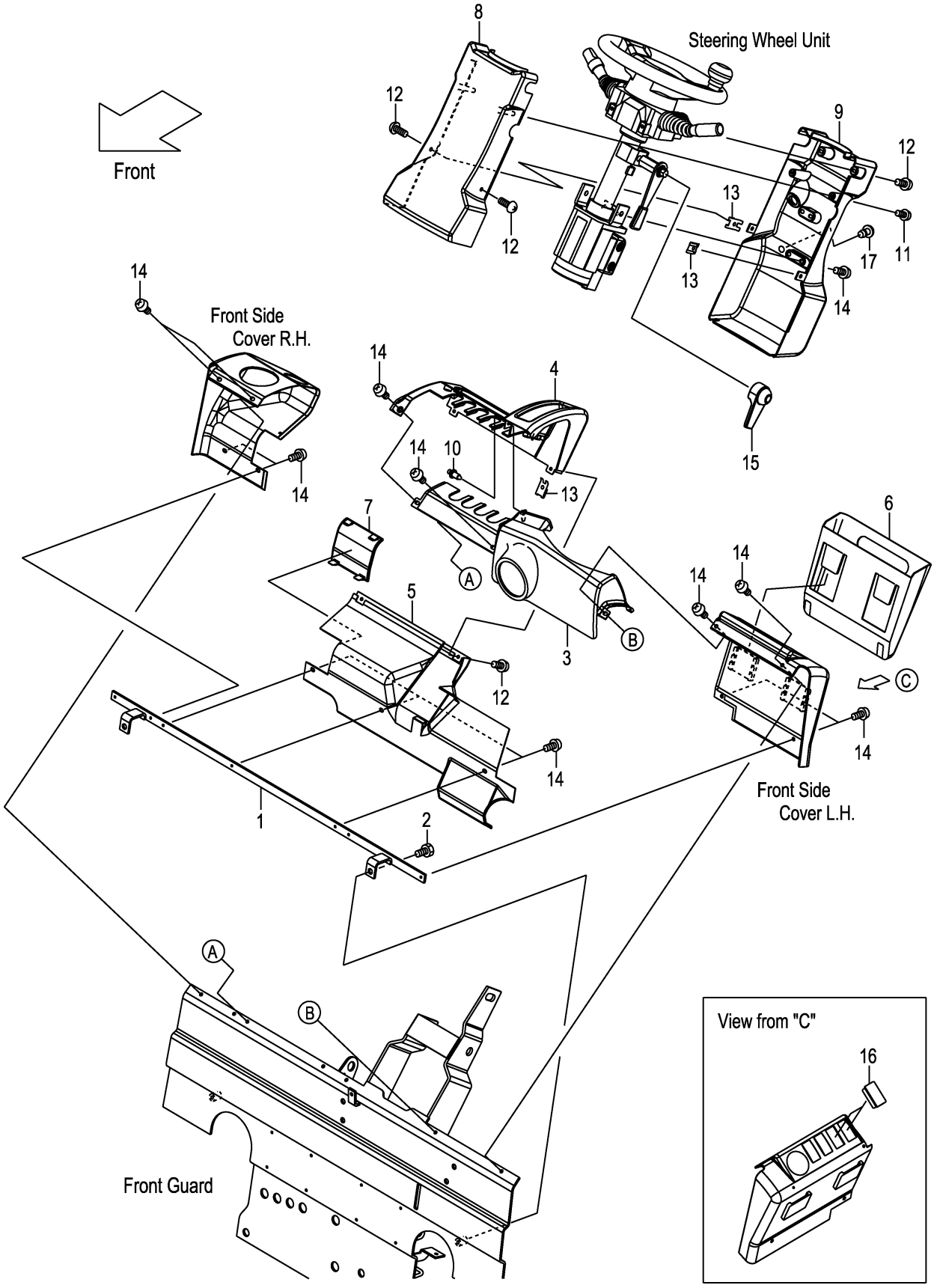

A:FD20T3Z FD25T3Z

Item No	Part No.	Mark	Description		Req'd	Remarks : Serial No.
1	22N56-42861		BRACKET,COVER	ﾌﾞﾗｹｯﾄ	1	
2	01185-08016		BOLT	ﾎﾞﾙﾄ	2	
3	22N56-42741		COVER,FRONT	ｶﾊﾞｰ	1	
4	22N56-42701		COVER,METER-PANEL	ｶﾊﾞｰ	1	
5	22N56-42731		COVER,LOWER	ｶﾊﾞｰ	1	
6	22N56-42751		POCKET,BINDER	ﾎﾟｹｯﾄ	1	
7	22N56-42771		COVER,CHANGE-LEVER	ｶﾊﾞｰ	1	
8	22N54-12321		COVER,HANDLE,FRONT	ｶﾊﾞｰ	1	
9	22N54-12311		COVER,HANDLE,REAR	ｶﾊﾞｰ	1	
-	52N57-72001		COVER,HANDLE,REAR	ｶﾊﾞｰ	1	[SWD]
10	22N56-42791		RIVET,PUSH	ﾘﾍﾞｯﾄ	1	
11	222A2-42031		SCREW	ｽｸﾘｭ	2	
12	209K2-43001		SCREW	ｽｸﾘｭ	6	
13	281E6-42521		NUT,SPEED	ﾅｯﾄ	4	
14	225R6-42031		SCREW	ｽｸﾘｭ	15	
15	22N54-12201		COVER,TILT-LOCK	ｶﾊﾞｰ	1	
16	256T2-42121		CAP	ｷｬｯﾌﾟ	2	
17	281E6-42571		PLUG,HOLE	ﾌﾟﾗｸﾞ	1	

FIG.130 SIDE COVER

(F7Z264A0) サイドカバー

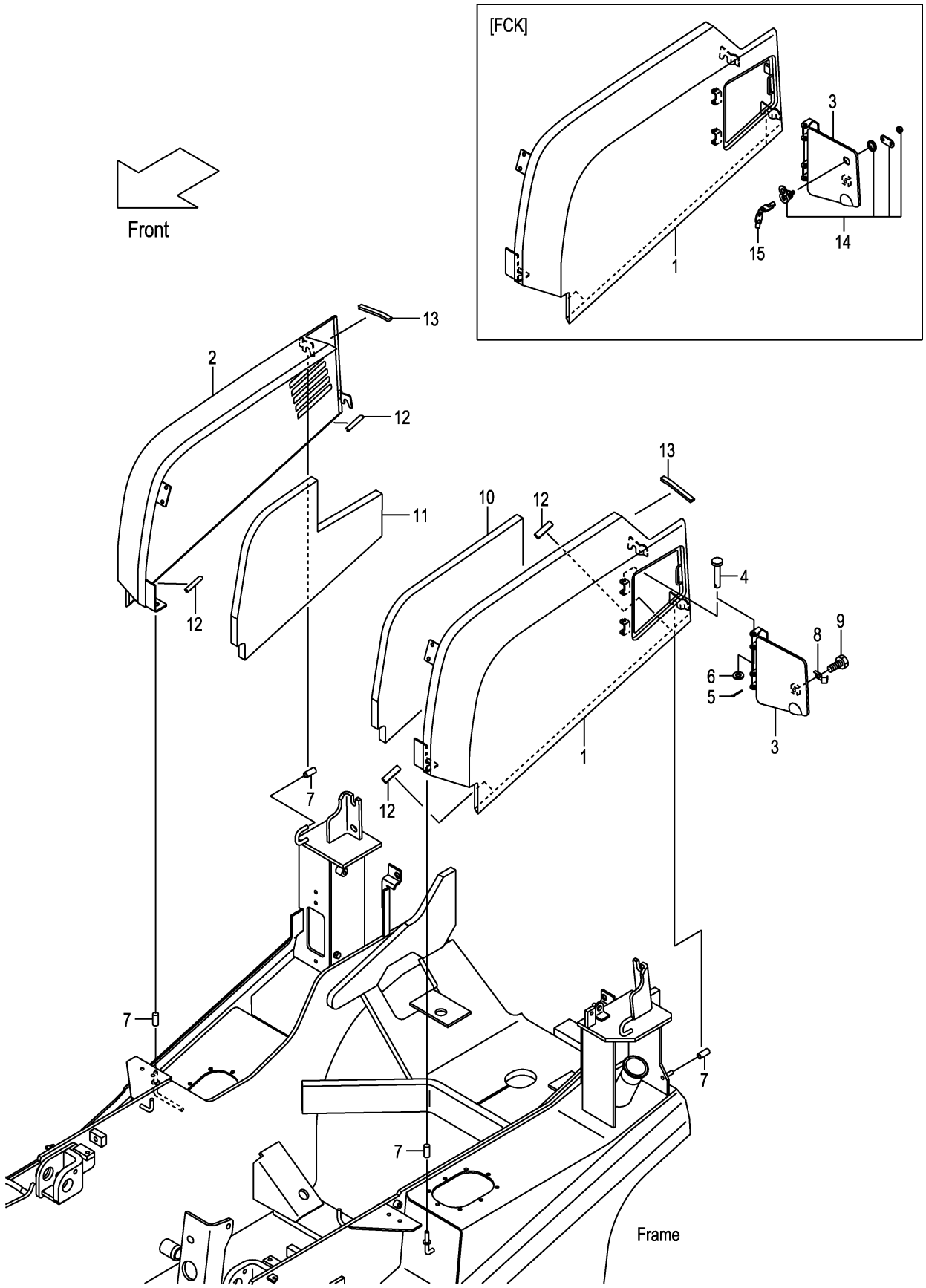

A:FD20C3Z FD20T3Z FD25C3Z FD25T3Z

Item No	Part No.	Mark	Description		Req'd	Remarks : Serial No.
1	22N56-40252		COVER,SIDE,LH	ｶﾊﾞｰ	1	
-	52N58-10211		COVER,SIDE,LH	ｶﾊﾞｰ	1	[FCK]
2	22N56-40262		COVER,SIDE,RH	ｶﾊﾞｰ	1	
3	22N56-40272		COVER,FUEL-CAP	ｶﾊﾞｰ	1	
-	52N58-10221		COVER,FUEL-CAP	ｶﾊﾞｰ	1	[FCK]
4	02262-08045		PIN,CLEVIS	ﾋﾟﾝ	2	
5	02200-02020		PIN,COTTER	ﾋﾟﾝ	2	1-109
-	216H3-92171		PIN,SNAP	ﾋﾟﾝ	2	110-
6	02000-00008		WASHER	ﾜｯｼｬ	2	
7	216G6-52291		CAP	ｷｬｯﾌﾟ	6	
8	22N56-43251		SPRING,LEAF	ｽﾌﾟﾘﾝｸﾞ	1	
9	01183-08012		BOLT	ﾎﾞﾙﾄ	1	
10	22N56-40411		RUBBER,FOAM,LH	ﾗﾊﾞｰ	1	
11	22N56-40421		RUBBER,FOAM,RH	ﾗﾊﾞｰ	1	
12	209P6-42831		EDGING,L=50	ｴｯｼﾞﾝｸﾞ	4	
13	243C6-42821		EDGING,L=100	ｴｯｼﾞﾝｸﾞ	2	
A1	52N58-10301		LOCK-ASSY,COIN	ｺｲﾝﾛｯｸｱｯｾﾝ	1	[FCK] INC.14,15
14	52N58-12501		CYL,KEY	ｼﾘﾝﾀﾞ	1	[FCK]
15	52N58-12511		KEY	ｷｰ	1	[FCK](1SET=2PCS)

FIG.131 SIDE COVER [SCB001][SCBCR]

(F7Z264B0) サイドカバー

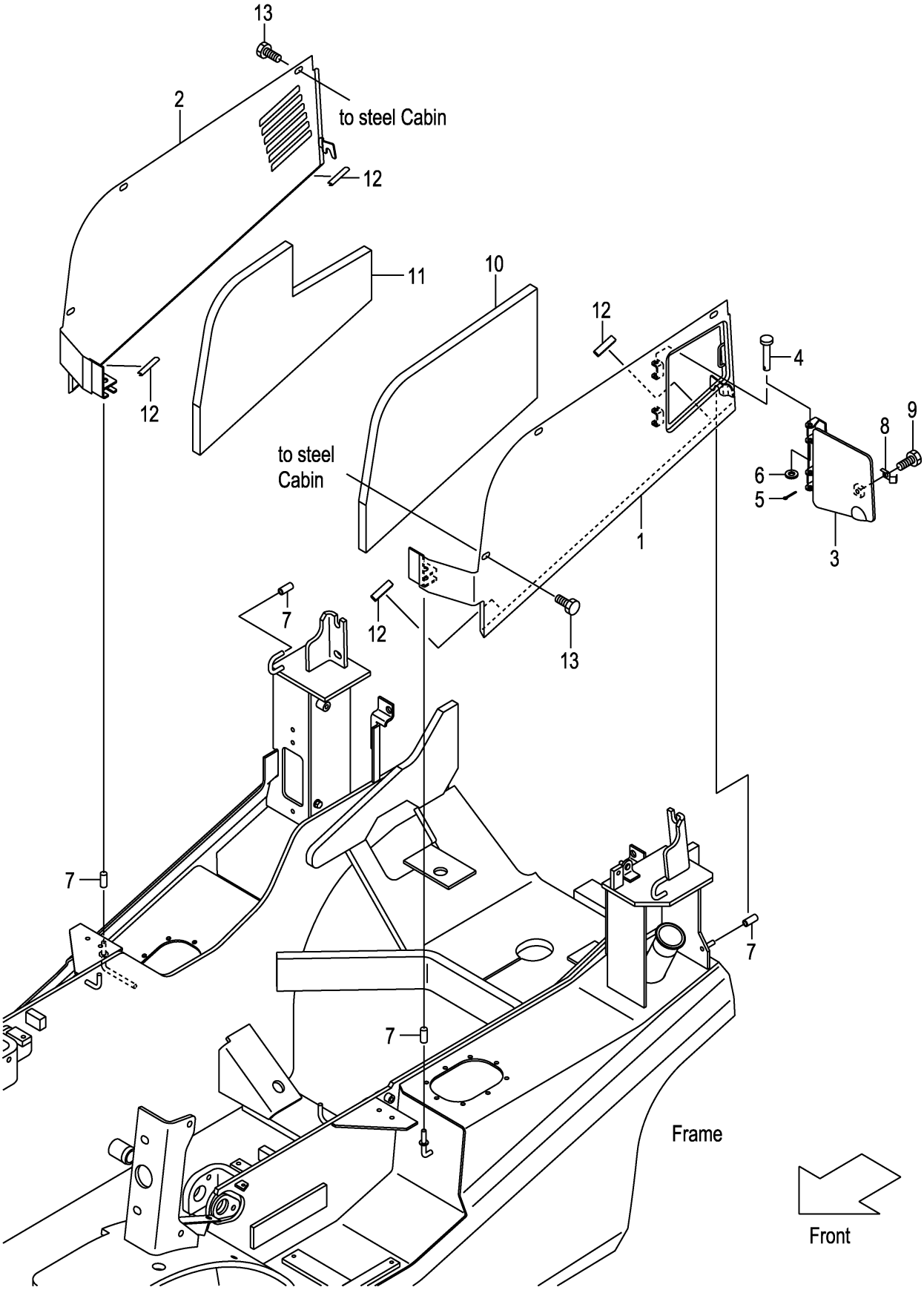

A:FD20C3Z FD20T3Z FD25C3Z FD25T3Z

Item No	Part No.	Mark	Description		Req'd	Remarks : Serial No.
1	52N55-30511		COVER,SIDE,LH	ｶﾊﾞｰ	1	[SCB001][SCBCR]
2	52N55-30501		COVER,SIDE,RH	ｶﾊﾞｰ	1	[SCB001][SCBCR]
3	22N56-40272		COVER,FUEL-CAP	ｶﾊﾞｰ	1	[SCB001][SCBCR]
4	02262-08045		PIN,CLEVIS	ﾋﾟﾝ	2	[SCB001][SCBCR]
5	02200-02020		PIN,COTTER	ﾋﾟﾝ	2	1-109 [SCB001][SCBCR]
-	216H3-92171		PIN,SNAP	ﾋﾟﾝ	2	110- [SCB001][SCBCR]
6	02000-00008		WASHER	ﾜｯｼｬ	2	[SCB001][SCBCR]
7	216G6-52291		CAP	ｷｬｯﾌﾟ	6	[SCB001][SCBCR]
8	22N56-43251		SPRING,LEAF	ｽﾌﾟﾘﾝｸﾞ	1	[SCB001][SCBCR]
9	01183-08012		BOLT	ﾎﾞﾙﾄ	1	[SCB001][SCBCR]
10	52N55-32311		RUBBER,FOAM,LH	ﾗﾊﾞｰ	1	[SCB001][SCBCR]
11	52N55-32301		RUBBER,FOAM,RH	ﾗﾊﾞｰ	1	[SCB001][SCBCR]
12	209P6-42831		EDGING,L=50	ｴｯｼﾞﾝｸﾞ	4	[SCB001][SCBCR]
13	01185-08025		BOLT	ﾎﾞﾙﾄ	6	[SCB001][SCBCR]

FIG.132 FRONT SIDE COVER

(F7Z264C0) フロントサイドカバー

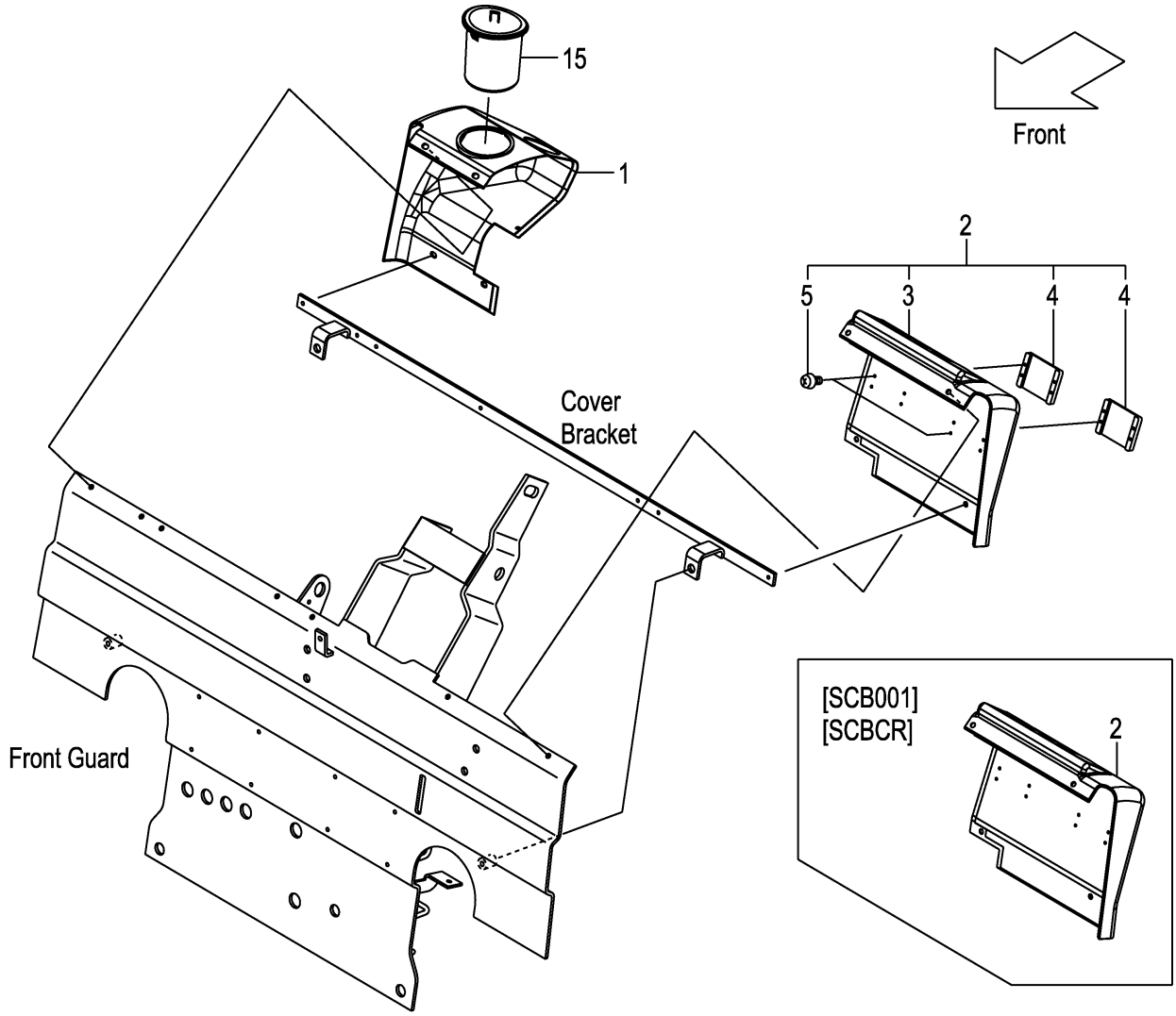

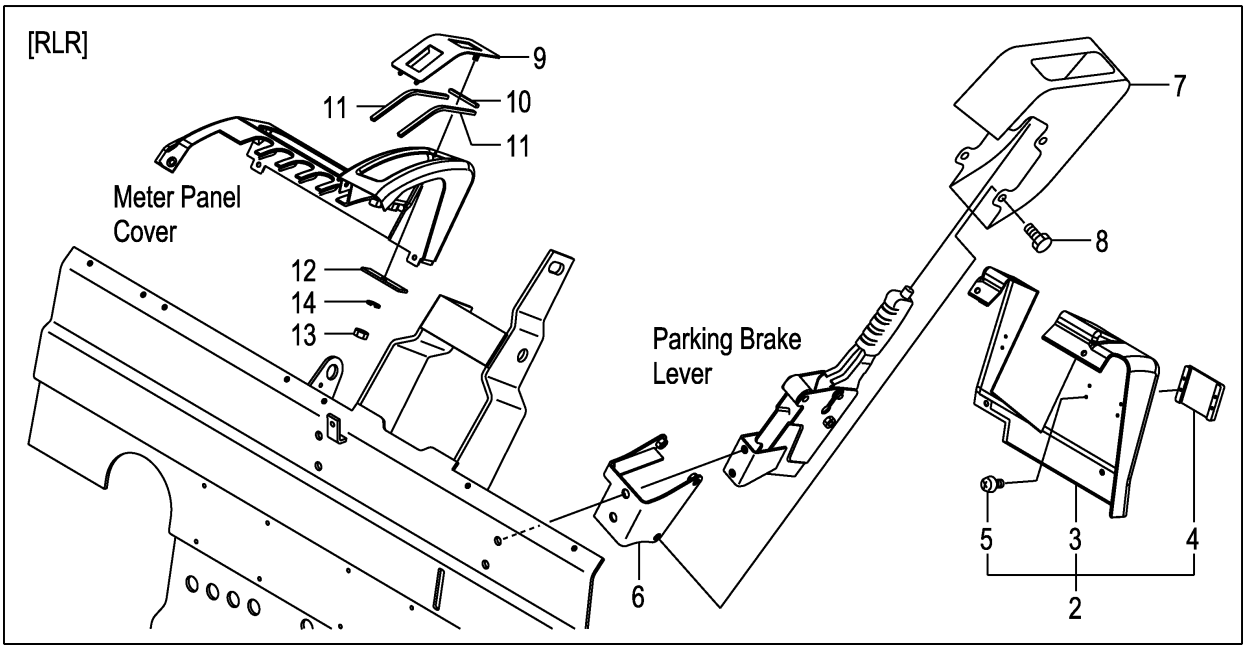

FIG.132
(F7Z264C0)

A:FD20C3Z FD20T3Z FD25C3Z FD25T3Z

Item No	Part No.	Mark	Description		Req'd	Remarks : Serial No.
1	22N56-42711		COVER,RH	ｶﾊﾞｰ	1	
-	22N56-43411		COVER,RH	ｶﾊﾞｰ	1	[TTM][TPM]
-	52N55-32141		COVER,RH	ｶﾊﾞｰ	1	[SCB001][SCBCR]
-	52N55-32401		COVER,RH	ｶﾊﾞｰ	1	[TTM/SCB001][TPM/SCB001]
-	52N55-32401		COVER,RH	ｶﾊﾞｰ	1	[TTM/SCBCR][TPM/SCBCR]
2	22N56-42851		COVER,LH	ｶﾊﾞｰ	1	INC.3-5
-	22N56-43021		COVER,LH	ｶﾊﾞｰ	1	[RWL/BB SW/LPG]
						[RWL/BBASW/LPG] INC.3-5
-	22N56-43021		COVER,LH	ｶﾊﾞｰ	1	[RWL/BB SW/AW071]
						[RWL/BBASW/AW071] INC.3-5
-	22N56-43021		COVER,LH	ｶﾊﾞｰ	1	[RWL/LPG/AW071] INC.3-5
-	22N56-43021		COVER,LH	ｶﾊﾞｰ	1	[BB SW/LPG/AW071]
						[BBASW/LPG/AW071] INC.3-5
-	22N56-43031		COVER,LH	ｶﾊﾞｰ	1	[AM][TTM/TPM] INC.3-5
-	52E00-52191		COVER,LH	ｶﾊﾞｰ	1	[LPG/LPGL] INC.3-5
-	52N55-40411		COVER,LH	ｶﾊﾞｰ	1	[AW071/WAS071] INC.3-5
-	52N55-42251		COVER,LH	ｶﾊﾞｰ	1	[SCB001][SCBCR]
-	52N55-32411		COVER,LH	ｶﾊﾞｰ	1	[AM/SCB001][TTM/TPM/SCB001]
-	52N55-32411		COVER,LH	ｶﾊﾞｰ	1	[AM/SCBCR][TTM/TPM/SCBCR]
-	22N56-43771		COVER,LH	ｶﾊﾞｰ	1	[PLR] INC.3-5
3	22N56-42721		COVER,LH	ｶﾊﾞｰ	1	(WITHOUT SCB001,SCBCR)
-	22N56-43421		COVER,LH	ｶﾊﾞｰ	1	[RWL/BB SW/LPG]
						[RWL/BBASW/LPG]
-	22N56-43421		COVER,LH	ｶﾊﾞｰ	1	[RWL/BB SW/AW071]
						[RWL/BBASW/AW071]
-	22N56-43421		COVER,LH	ｶﾊﾞｰ	1	[RWL/LPG/AW071]
-	22N56-43421		COVER,LH	ｶﾊﾞｰ	1	[BB SW/LPG/AW071]
						[BBASW/LPG/AW071]
-	22N56-43431		COVER,LH	ｶﾊﾞｰ	1	[AM][TTM/TPM]
-	52E00-52201		COVER,LH	ｶﾊﾞｰ	1	[LPG/LPGL]
-	52N55-40081		COVER,LH	ｶﾊﾞｰ	1	[AW071/WAS071]
-	22N56-43871		COVER,LH	ｶﾊﾞｰ	1	[PLR]
4	22N56-42811		COVER	ｶﾊﾞｰ	2	(WITHOUT SCB001,SCBCR)
-	22N56-42811		COVER	ｶﾊﾞｰ	1	[PLR]
5	214A6-42781		SCREW	ｽｸﾘｭ	8	(WITHOUT SCB001,SCBCR)
-	214A6-42781		SCREW	ｽｸﾘｭ	4	[PLR]
6	22N56-43801		BRACKET	ﾌﾞﾗｹｯﾄ	1	[PLR]
7	22N56-43831		COVER,PLR	ｶﾊﾞｰ	1	[PLR]
8	01185-08015		BOLT	ﾎﾞﾙﾄ	3	[PLR]
9	22N56-43881		COVER,PLR	ｶﾊﾞｰ	1	[PLR]
10	22N56-43911		RUBBER	ﾗﾊﾞｰ	1	[PLR]
11	22N56-43921		RUBBER	ﾗﾊﾞｰ	2	[PLR]
12	22N56-43931		PLATE	ﾌﾟﾚｰﾄ	1	[PLR]
13	01400-00006		NUT	ﾅｯﾄ	1	[PLR]
14	02010-00006		WASHER	ﾜｯｼｬ	1	[PLR]
15	22N56-42761		CUP,HOLDER	ｶｯﾌﾟ	1	(WITHOUT SM)

FIG.133 SEAT

(F7Z26810) シート

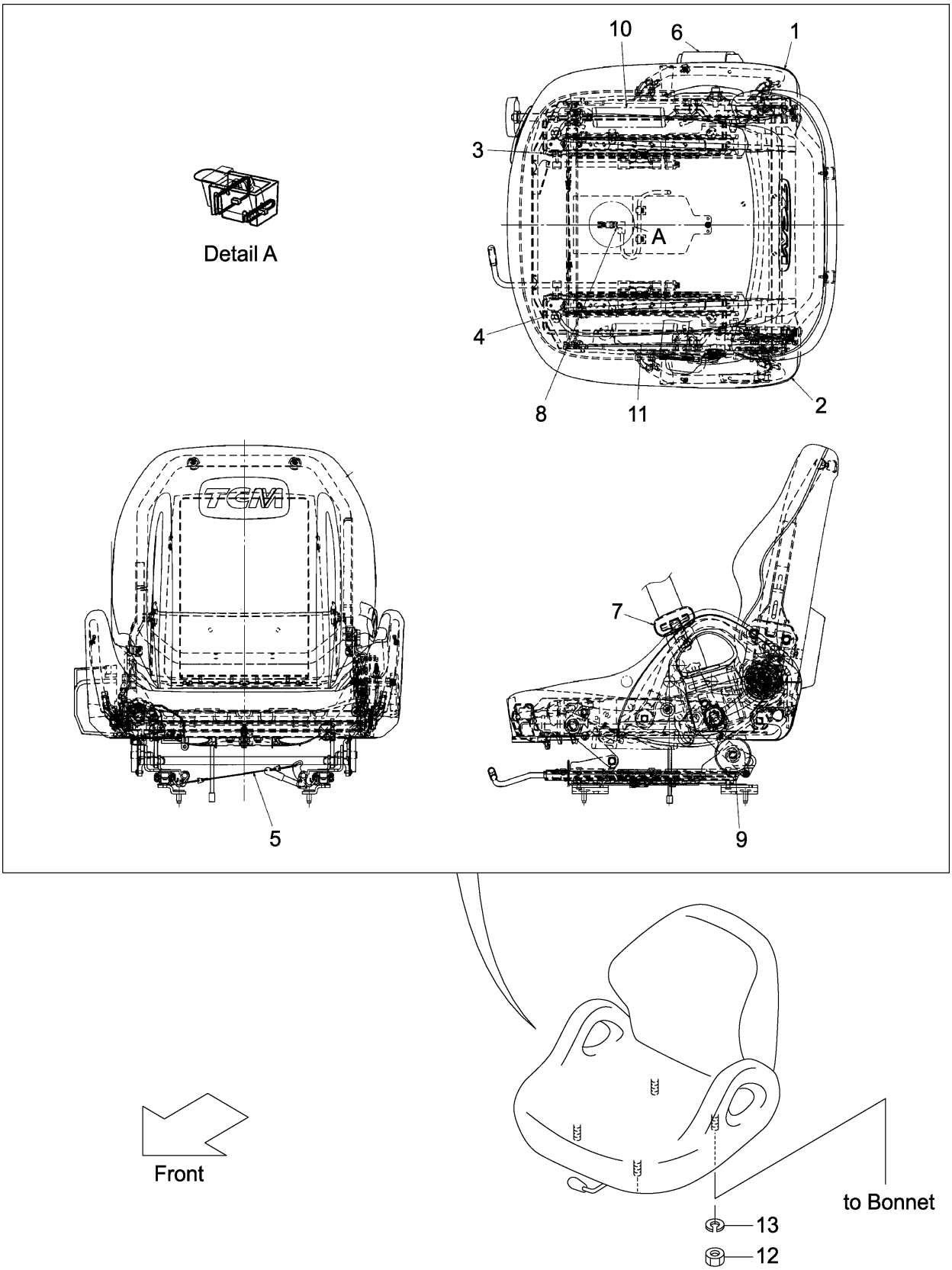

FIG.133

(F7Z26810)

A:FD20C3Z FD20T3Z FD25C3Z FD25T3Z

Item No	Part No.	Mark	Description		Req'd	Remarks : Serial No.
A1	242F6-80101		SEAT-ASSY	ｼｰﾄｱｯｾﾝ	1	INC.1-7,9-11
-	542F3-80101		SEAT-ASSY	ｼｰﾄｱｯｾﾝ	1	(SEAT SW) INC.1-11
-	52N56-22201		SEAT-ASSY	ｼｰﾄｱｯｾﾝ	1	[OKM][SIL] INC.1-11
1	242F6-82041		SHIELD,RH	ｼｰﾙﾄﾞ	1	
2	242F6-82051		SHIELD,LH	ｼｰﾙﾄﾞ	1	
3	242F6-82081		TRACK,RH	ﾄﾗｯｸ	1	
4	242F6-82091		TRACK,LH	ﾄﾗｯｸ	1	
5	242F6-82101		WIRE	ﾜｲﾔ	1	
6	242F6-82111		BELT,SEAT,OUTER	ﾍﾞﾙﾄ	1	
7	242F6-82121		BELT,SEAT,INNER	ﾍﾞﾙﾄ	1	
8	542F3-82011		SWITCH,SEAT	ｽｲｯﾁ	1	[OKM][SIL](SEAT SW)
9	242F6-82141		ABSORBER,SUSPENSION	ｱﾌﾞｿｰﾊﾞ	2	
10	242F6-82271		SPRING,TENSION	ｽﾌﾟﾘﾝｸﾞ	1	
11	242F6-82281		SPRING,TENSION	ｽﾌﾟﾘﾝｸﾞ	1	
12	01400-00008		NUT	ﾅｯﾄ	4	
13	02010-00008		WASHER	ﾜｯｼｬ	4	

FIG.134 SEAT [HGL]

(F7Z26820) シート

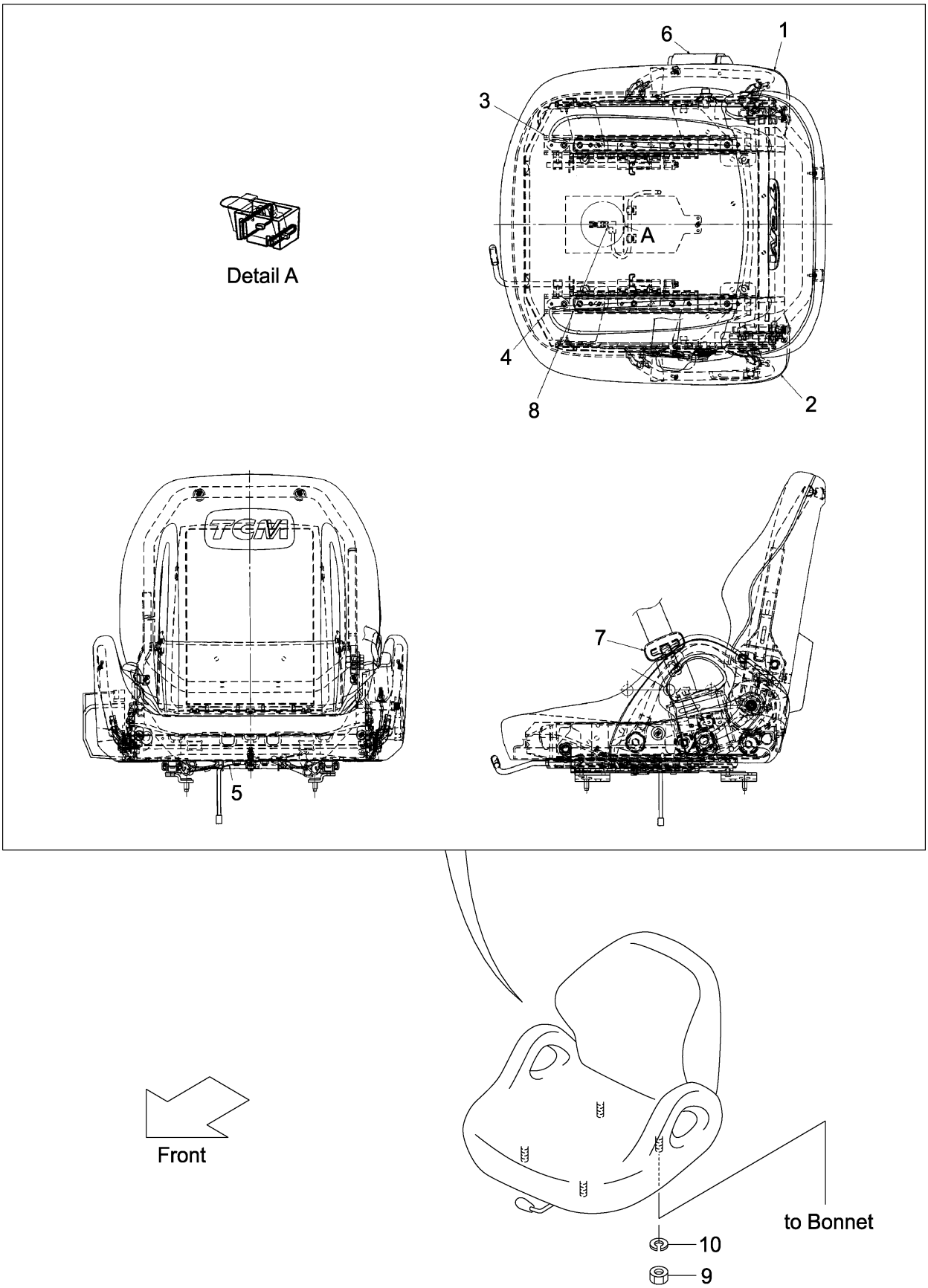

FIG.134

(F7Z26820)

A:FD20C3Z FD20T3Z FD25C3Z FD25T3Z

Item No	Part No.	Mark	Description		Req'd	Remarks : Serial No.
A1	242F6-80201		SEAT-ASSY	ｼｰﾄｱｯｾﾝ	1	[HGL] INC.1-7
-	542F3-80201		SEAT-ASSY	ｼｰﾄｱｯｾﾝ	1	[HGL](SEAT SW) INC.1-8
1	242F6-82041		SHIELD,RH	ｼｰﾙﾄﾞ	1	[HGL]
2	242F6-82051		SHIELD,LH	ｼｰﾙﾄﾞ	1	[HGL]
3	242F6-82361		TRACK,RH	ﾄﾗｯｸ	1	[HGL]
4	242F6-82371		TRACK,LH	ﾄﾗｯｸ	1	[HGL]
5	242F6-82101		WIRE	ﾜｲﾔ	1	[HGL]
6	242F6-82111		BELT,SEAT,OUTER	ﾍﾞﾙﾄ	1	[HGL]
7	242F6-82121		BELT,SEAT,INNER	ﾍﾞﾙﾄ	1	[HGL]
8	542F3-82011		SWITCH,SEAT	ｽｲｯﾁ	1	[HGL](SEAT SW)
9	01400-00008		NUT	ﾅｯﾄ	4	[HGL]
10	02010-00008		WASHER	ﾜｯｼｬ	4	[HGL]

FIG.135 PUMP UNIT

(F7Z27110) ﾎﾟﾝﾌﾟﾕﾆｯﾄ

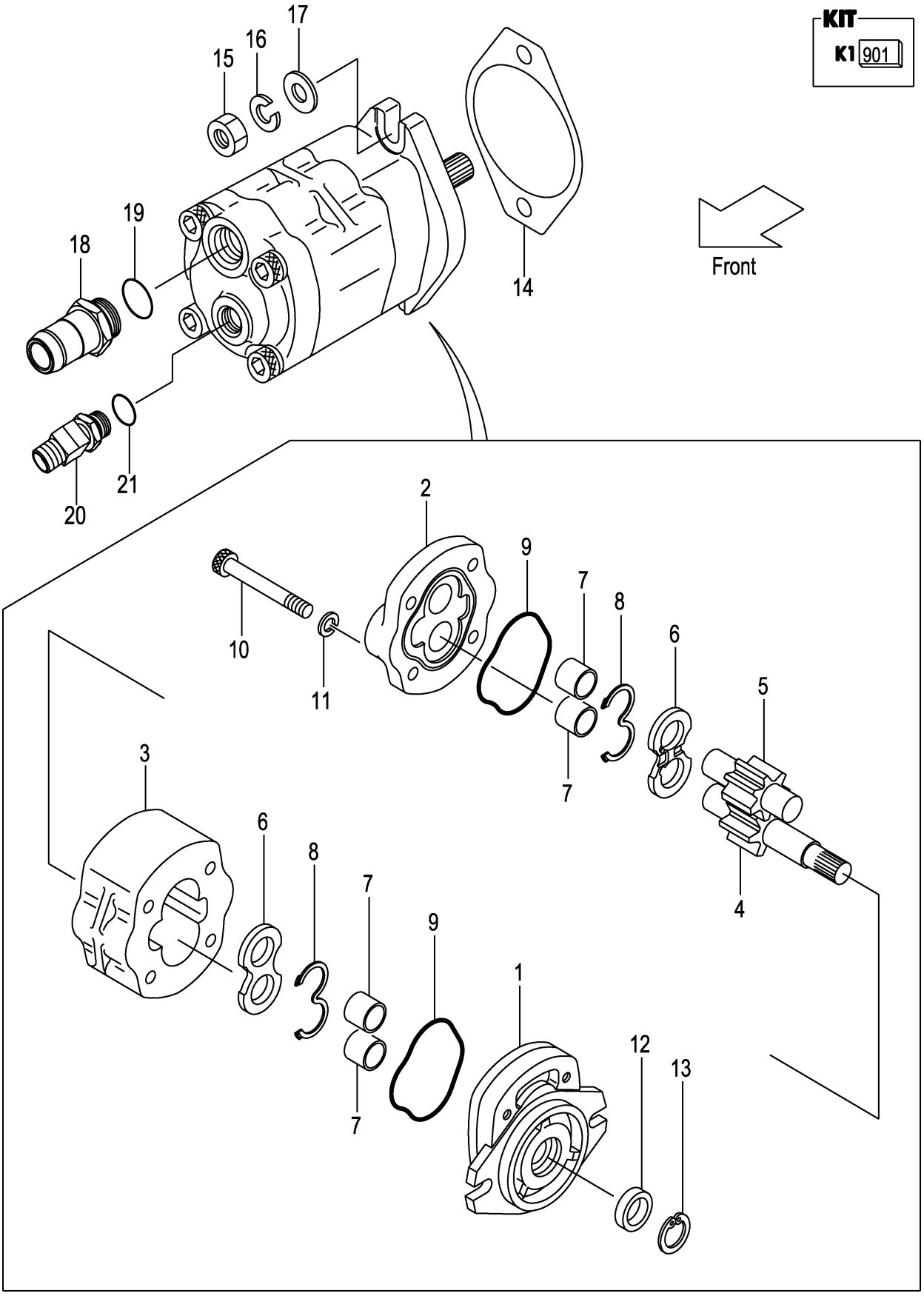

A:FD20C3Z FD20T3Z FD25C3Z FD25T3Z

Item No	Part No.	Mark	Description		Req'd	Remarks : Serial No.
A1	117M7-10401		PUMP-ASSY,GEAR	ｷﾞﾔｰﾎﾟﾝﾌﾟｱｯｾﾝ	1	INC.1-13
901	R-403-21988	K1	KIT,REPAIR	ﾘﾍﾟｱｷｯﾄ	1	INC.8,9,12
1	NO PART NO.	#	COVER,FRONT	ｶﾊﾞｰ	1	
2	NO PART NO.	#	COVER,REAR	ｶﾊﾞｰ	1	
3	NO PART NO.	#	BODY	ﾎﾞﾃﾞｨ	1	
4	NO PART NO.	#	GEAR,DRIVE	ｷﾞﾔｰ	1	
5	NO PART NO.	#	GEAR,DRIVEN	ｷﾞﾔｰ	1	
6	NO PART NO.	#	PLATE,SIDE	ﾌﾟﾚｰﾄ	2	
7	NO PART NO.	#	BUSHING	ﾌﾞｯｼﾝｸﾞ	4	
8	NO PART NO.	#*	GASKET	ｶﾞｽｹｯﾄ	2	
9	NO PART NO.	#*	GASKET	ｶﾞｽｹｯﾄ	2	
10	R-402-65004-41		BOLT	ﾎﾞﾙﾄ	4	
11	R-402-00710-12		WASHER	ﾜｯｼｬ	4	
12	NO PART NO.	#*	SEAL,OIL	ｼｰﾙ	1	
13	NO PART NO.	#	RING,SNAP	ｽﾅｯﾌﾟﾘﾝｸﾞ	1	
14	23657-12002		PACKING	ﾊﾟｯｷﾝｸﾞ	1	
15	01402-00010		NUT	ﾅｯﾄ	2	
16	02010-00010		WASHER	ﾜｯｼｬ	2	
17	02000-00010		WASHER	ﾜｯｼｬ	2	
A2	225A7-62021		NIPPLE-ASSY	ﾆｯﾌﾟﾙｱｯｾﾝ	1	INC.18,19
18	NO PART NO.	#	NIPPLE	ﾆｯﾌﾟﾙ	1	
19	03320-00290		O-RING	Oﾘﾝｸﾞ	1	
A3	271A7-60351		ADAPTER-ASSY	ｱﾀﾞﾌﾟﾀｱｯｾﾝ	1	INC.20,21
20	NO PART NO.	#	ADAPTER	ｱﾀﾞﾌﾟﾀ	1	
21	03320-00180		O-RING	Oﾘﾝｸﾞ	1	

FIG.136 CONTROL VALVE [2SV]

(F7Z27310) ｺﾝﾄﾛｰﾙﾊﾞﾙﾌﾞ

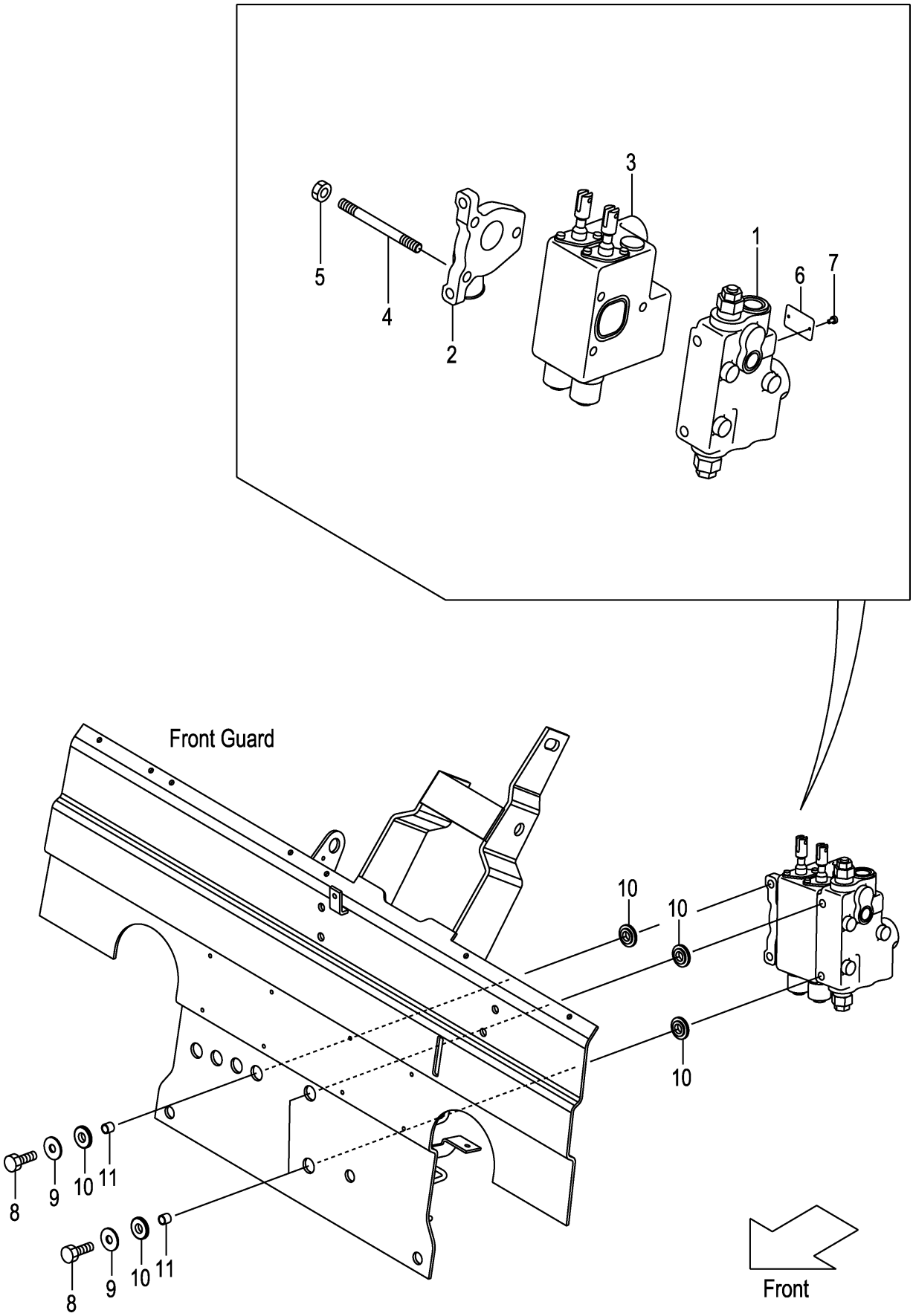

A:FD20C3Z FD20T3Z FD25C3Z FD25T3Z

Item No	Part No.	Mark	Description		Req'd	Remarks : Serial No.
A1	22N57-30221		VALVE-ASSY,CONTROL	ｺﾝﾄﾛｰﾙﾊﾞﾙﾌﾞｱｯｾﾝ	1	INC.1-7
-	52N54-60221		VALVE-ASSY,CONTROL	ｺﾝﾄﾛｰﾙﾊﾞﾙﾌﾞｱｯｾﾝ	1	[VLS] INC.1-7
-	22N57-30321		VALVE-ASSY,CONTROL	ｺﾝﾄﾛｰﾙﾊﾞﾙﾌﾞｱｯｾﾝ	1	[VLL][SIL] INC.1-7
1	B-402-36066		COVER,FRONT	ｶﾊﾞｰ	1	
-	B-402-36067		COVER,FRONT	ｶﾊﾞｰ	1	[VLS][VLL][SIL]
2	B-402-36603		COVER,REAR	ｶﾊﾞｰ	1	
-	B-402-36151		COVER,REAR	ｶﾊﾞｰ	1	[VLL][SIL]
3	B-402-37129		VALVE,COMBINATION	ﾊﾞﾙﾌﾞ	1	
-	B-402-37128		VALVE,COMBINATION	ﾊﾞﾙﾌﾞ	1	[VLL][SIL]
4	B-402-30905-02		BOLT,STUD	ﾎﾞﾙﾄ	3	
5	B-023-06632-41		NUT	ﾅｯﾄ	3	
6	B-402-00704-13		PLATE,NAME	ﾌﾟﾚｰﾄ	1	
7	B-026-50103		RIVET	ﾘﾍﾞｯﾄ	2	
8	22N57-32041		BOLT	ﾎﾞﾙﾄ	3	
9	216G7-32021		WASHER,PLANE	ﾜｯｼｬ	3	
10	22N57-42201		RUBBER,VALVE	ﾗﾊﾞｰ	6	
11	22N57-42211		COLLAR	ｶﾗｰ	3	

FIG.137 CONTROL VALVE [3SV]

(F7Z27320) ｺﾝﾄﾛｰﾙﾊﾞﾙﾌﾞ

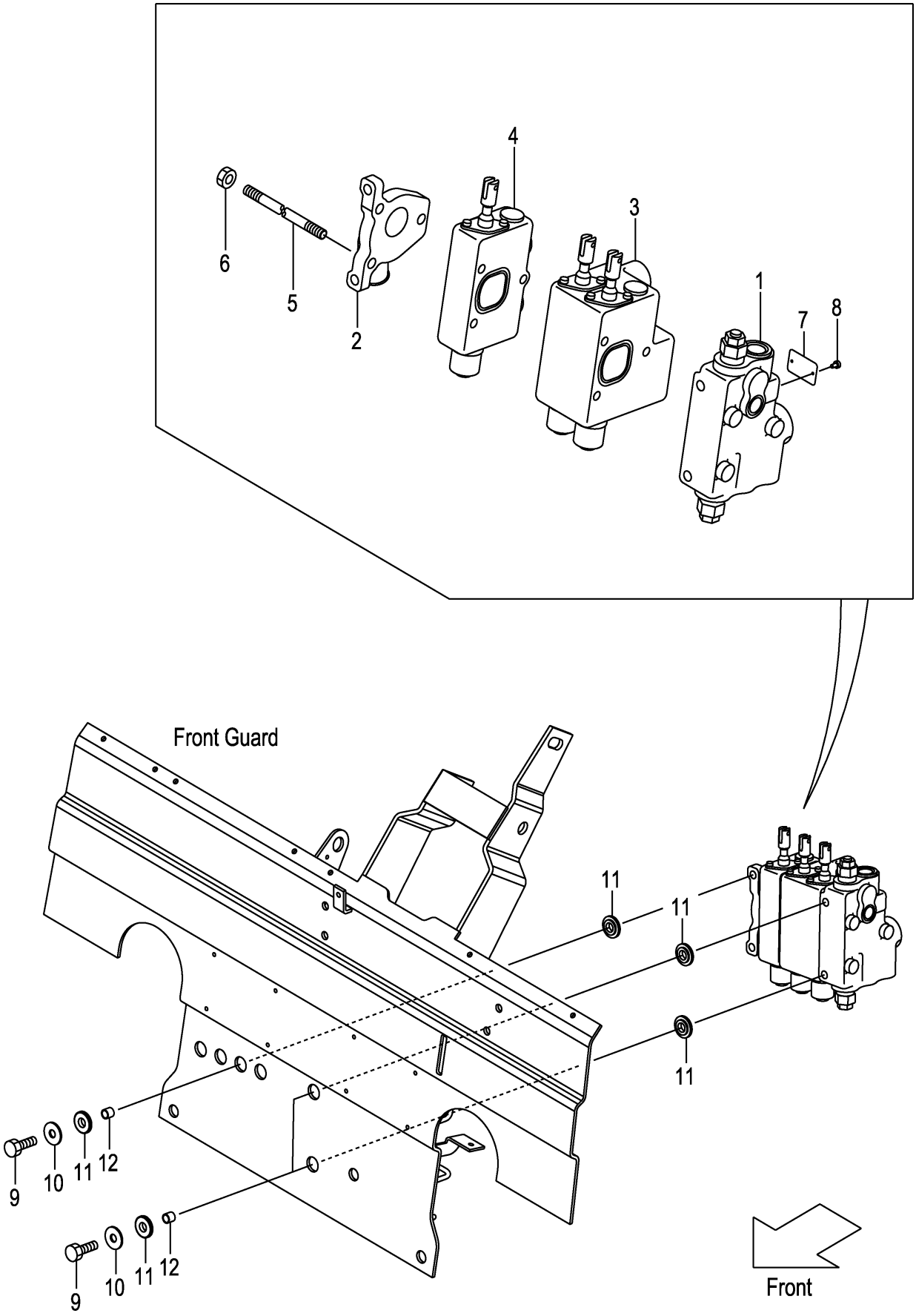

FIG.137

(F7Z27320)

A:FD20C3Z FD20T3Z FD25C3Z FD25T3Z

Item No	Part No.	Mark	Description		Req'd	Remarks : Serial No.
A1	22N57-30231		VALVE-ASSY,CONTROL	ｺﾝﾄﾛｰﾙﾊﾞﾙﾌﾞｱｯｾﾝ	1	[3SV] INC.1-8
-	52N54-60231		VALVE-ASSY,CONTROL	ｺﾝﾄﾛｰﾙﾊﾞﾙﾌﾞｱｯｾﾝ	1	[3SV/VLS] INC.1-8
-	22N57-30331		VALVE-ASSY,CONTROL	ｺﾝﾄﾛｰﾙﾊﾞﾙﾌﾞｱｯｾﾝ	1	[3SV/VLL][3SV/SIL] INC.1-8
1	B-402-36066		COVER,FRONT	ｶﾊﾞｰ	1	[3SV]
-	B-402-36067		COVER,FRONT	ｶﾊﾞｰ	1	[3SV/VLS][3SV/VLL][3SV/SIL]
2	B-402-36603		COVER,REAR	ｶﾊﾞｰ	1	[3SV]
-	B-402-36151		COVER,REAR	ｶﾊﾞｰ	1	[3SV/VLL][3SV/SIL]
3	B-402-37129		VALVE,COMBINATION	ﾊﾞﾙﾌﾞ	1	[3SV]
-	B-402-37128		VALVE,COMBINATION	ﾊﾞﾙﾌﾞ	1	[3SV/VLL][3SV/SIL]
4	B-402-36924		VALVE,SECTION	ﾊﾞﾙﾌﾞ	1	[3SV]
5	B-402-30905-03		BOLT,STUD	ﾎﾞﾙﾄ	3	[3SV]
6	B-023-06632-41		NUT	ﾅｯﾄ	3	[3SV]
7	B-402-00704-13		PLATE,NAME	ﾌﾟﾚｰﾄ	1	[3SV]
8	B-026-50103		RIVET	ﾘﾍﾞｯﾄ	2	[3SV]
9	22N57-32041		BOLT	ﾎﾞﾙﾄ	3	[3SV]
10	216G7-32021		WASHER,PLANE	ﾜｯｼｬ	3	[3SV]
11	22N57-42201		RUBBER,VALVE	ﾗﾊﾞｰ	6	[3SV]
12	22N57-42211		COLLAR	ｶﾗｰ	3	[3SV]

FIG.138 CONTROL VALVE [4SV]

(F7Z27330) コントロールバルブ

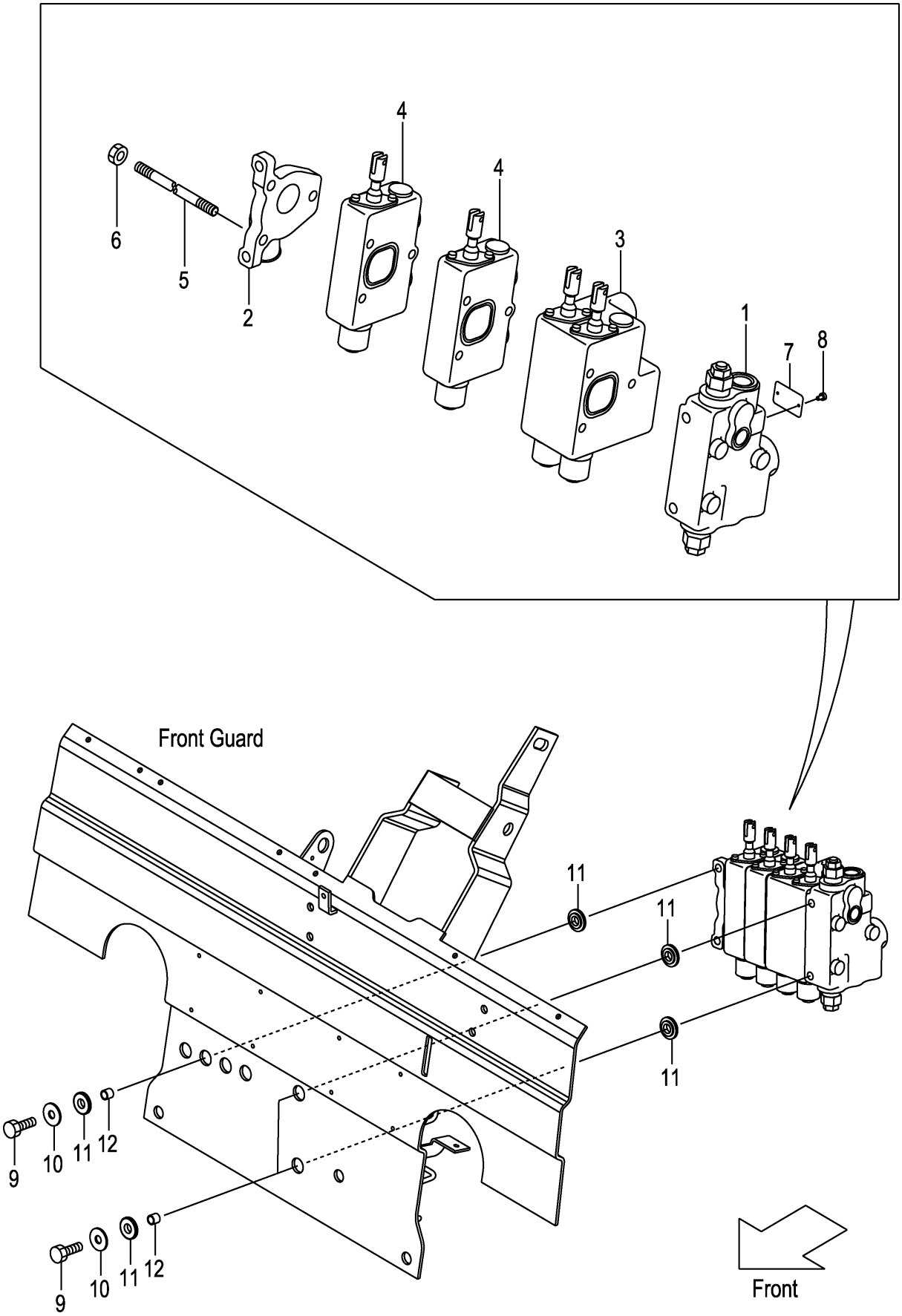

A:FD20C3Z FD20T3Z FD25C3Z FD25T3Z

Item No	Part No.	Mark	Description		Req'd	Remarks : Serial No.
A1	22N57-30241		VALVE-ASSY,CONTROL	ｺﾝﾄﾛｰﾙﾊﾞﾙﾌﾞｱｯｾﾝ	1	[4SV] INC.1-8
-	52N54-60241		VALVE-ASSY,CONTROL	ｺﾝﾄﾛｰﾙﾊﾞﾙﾌﾞｱｯｾﾝ	1	[4SV/VLS] INC.1-8
-	22N57-30341		VALVE-ASSY,CONTROL	ｺﾝﾄﾛｰﾙﾊﾞﾙﾌﾞｱｯｾﾝ	1	[4SV/VLL][4SV/SIL] INC.1-8
1	B-402-36066		COVER,FRONT	ｶﾊﾞｰ	1	[4SV]
-	B-402-36067		COVER,FRONT	ｶﾊﾞｰ	1	[4SV/VLS][4SV/VLL][4SV/SIL]
2	B-402-36603		COVER,REAR	ｶﾊﾞｰ	1	[4SV]
-	B-402-36151		COVER,REAR	ｶﾊﾞｰ	1	[4SV/VLL][4SV/SIL]
3	B-402-37129		VALVE,COMBINATION	ﾊﾞﾙﾌﾞ	1	[4SV]
-	B-402-37128		VALVE,COMBINATION	ﾊﾞﾙﾌﾞ	1	[4SV/VLL][4SV/SIL]
4	B-402-36924		VALVE,SECTION	ﾊﾞﾙﾌﾞ	2	[4SV]
5	B-402-30905-04		BOLT,STUD	ﾎﾞﾙﾄ	3	[4SV]
6	B-023-06632-41		NUT	ﾅｯﾄ	3	[4SV]
7	B-402-00704-13		PLATE,NAME	ﾌﾟﾚｰﾄ	1	[4SV]
8	B-026-50103		RIVET	ﾘﾍﾞｯﾄ	2	[4SV]
9	22N57-32041		BOLT	ﾎﾞﾙﾄ	3	[4SV]
10	216G7-32021		WASHER,PLANE	ﾜｯｼｬ	3	[4SV]
11	22N57-42201		RUBBER,VALVE	ﾗﾊﾞｰ	6	[4SV]
12	22N57-42211		COLLAR	ｶﾗｰ	3	[4SV]

FIG.139 CONTROL VALVE [5SV]

(F7Z27340) コントロールバルブ

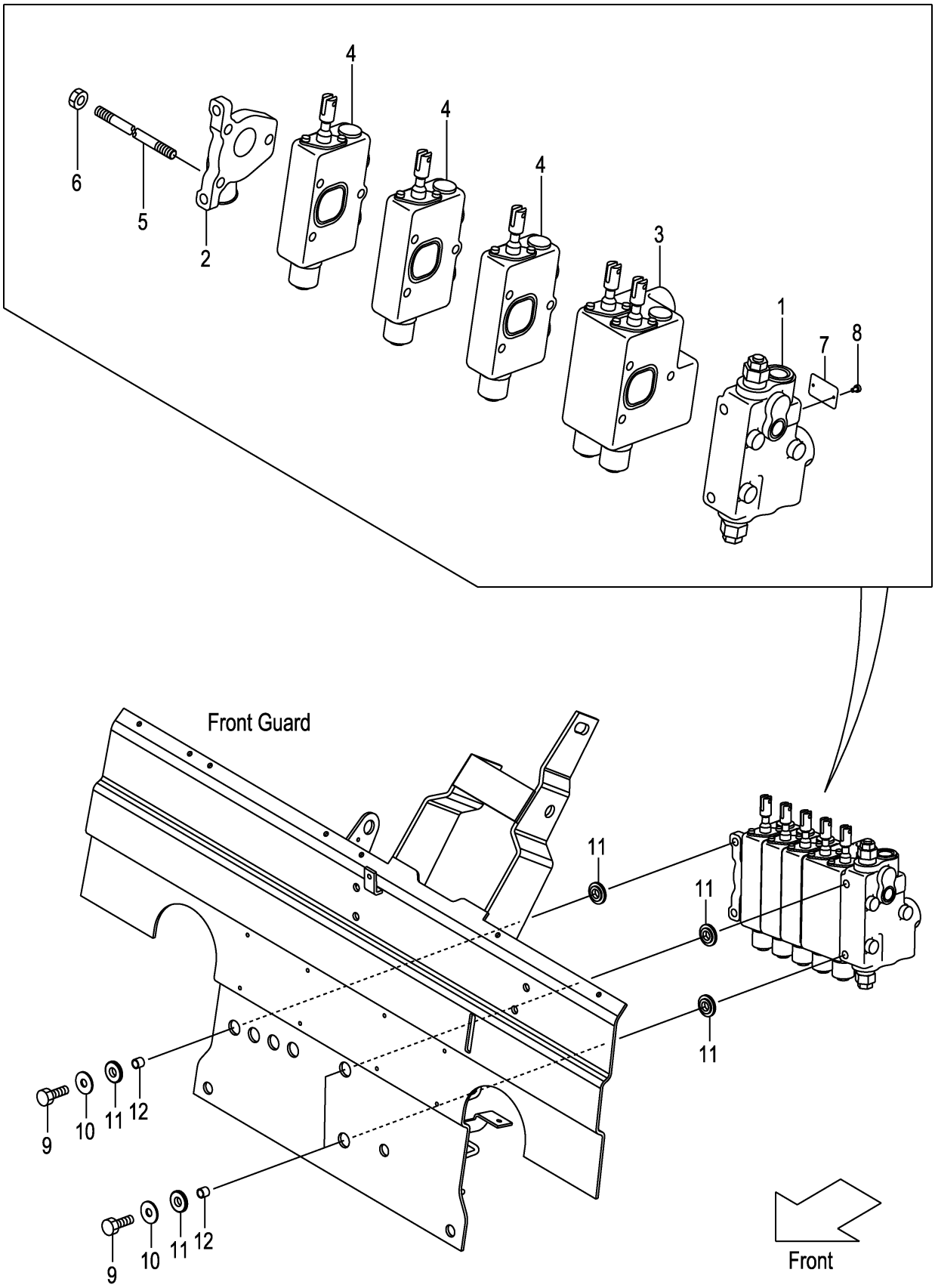

FIG.139
(F7Z27340)

A:FD20C3Z FD20T3Z FD25C3Z FD25T3Z

Item No	Part No.	Mark	Description		Req'd	Remarks : Serial No.
A1	22N57-30251		VALVE-ASSY,CONTROL	ｺﾝﾄﾛｰﾙﾊﾞﾙﾌﾞｱｯｾﾝ	1	[5SV] INC.1-8
-	52N54-60251		VALVE-ASSY,CONTROL	ｺﾝﾄﾛｰﾙﾊﾞﾙﾌﾞｱｯｾﾝ	1	[5SV/VLS] INC.1-8
-	22N57-30351		VALVE-ASSY,CONTROL	ｺﾝﾄﾛｰﾙﾊﾞﾙﾌﾞｱｯｾﾝ	1	[5SV/VLL][5SV/SIL] INC.1-8
1	B-402-36066		COVER,FRONT	ｶﾊﾞｰ	1	[5SV]
-	B-402-36067		COVER,FRONT	ｶﾊﾞｰ	1	[5SV/VLS][5SV/VLL][5SV/SIL]
2	B-402-36603		COVER,REAR	ｶﾊﾞｰ	1	[5SV]
-	B-402-36151		COVER,REAR	ｶﾊﾞｰ	1	[5SV/VLL][5SV/SIL]
3	B-402-37129		VALVE,COMBINATION	ﾊﾞﾙﾌﾞ	1	[5SV]
-	B-402-37128		VALVE,COMBINATION	ﾊﾞﾙﾌﾞ	1	[5SV/VLL][5SV/SIL]
4	B-402-36924		VALVE,SECTION	ﾊﾞﾙﾌﾞ	3	[5SV]
5	B-402-30905-05		BOLT,STUD	ﾎﾞﾙﾄ	3	[5SV]
6	B-023-06632-41		NUT	ﾅｯﾄ	3	[5SV]
7	B-402-00704-13		PLATE,NAME	ﾌﾟﾚｰﾄ	1	[5SV]
8	B-026-50103		RIVET	ﾘﾍﾞｯﾄ	2	[5SV]
9	22N57-32041		BOLT	ﾎﾞﾙﾄ	3	[5SV]
10	216G7-32021		WASHER,PLANE	ﾜｯｼｬ	3	[5SV]
11	22N57-42201		RUBBER,VALVE	ﾗﾊﾞｰ	6	[5SV]
12	22N57-42211		COLLAR	ｶﾗｰ	3	[5SV]

FIG.140 CONTROL VALVE FITTING

(F7Z27350) コントロールバルブフィッティング

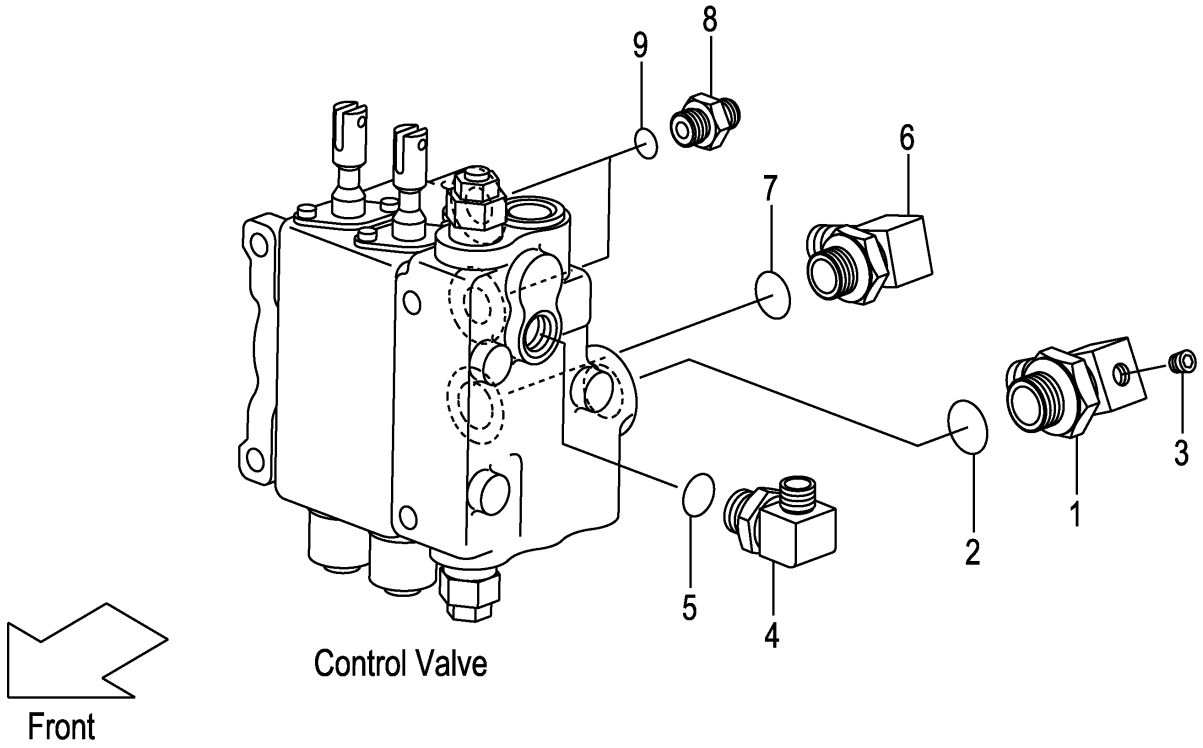

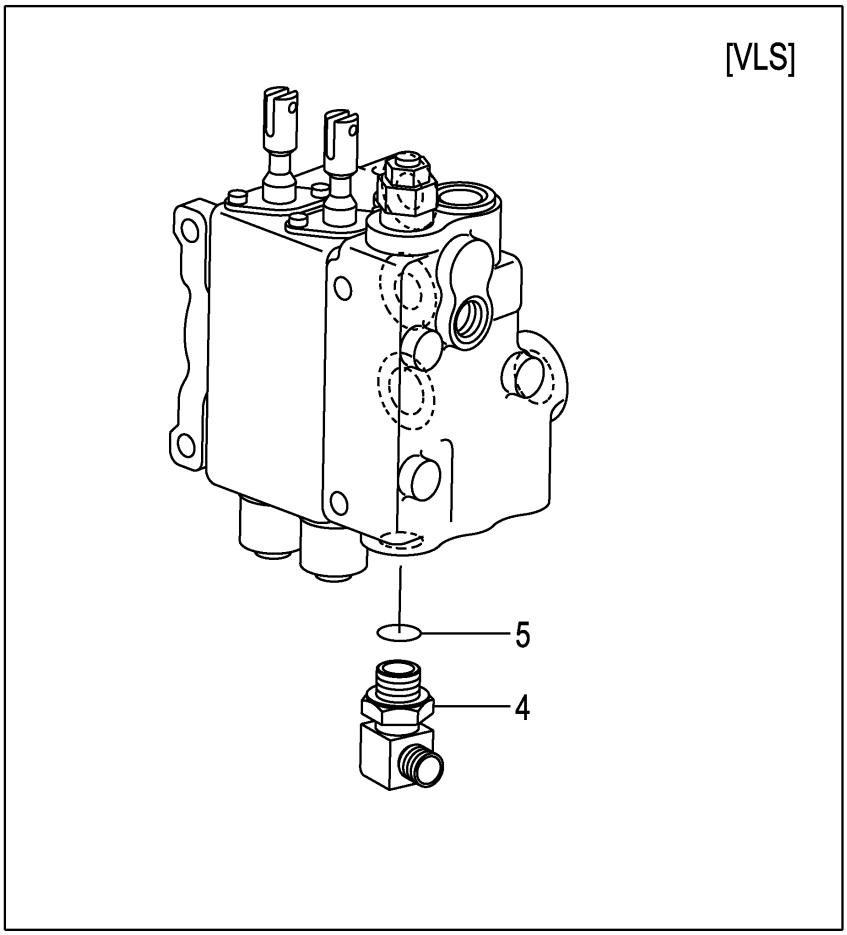

A:FD20C3Z FD20T3Z FD25C3Z FD25T3Z

Item No	Part No.	Mark	Description		Req'd	Remarks : Serial No.
A1	22N57-63011		ELBOW-ASSY	ｴﾙﾎﾞｱｯｾﾝ	1	INC.1-3
1	NO PART NO.	#	ELBOW	ｴﾙﾎﾞ	1	
2	03320-00240		O-RING	Oﾘﾝｸﾞ	1	
3	23870-52871		PLUG,SUNK	ﾌﾟﾗｸﾞ	1	
A2	04150-20202		ELBOW-ASSY	ｴﾙﾎﾞｱｯｾﾝ	1	INC.4,5
-	04150-20202		ELBOW-ASSY	ｴﾙﾎﾞｱｯｾﾝ	2	[VLS] INC.4,5
4	NO PART NO.	#	ELBOW	ｴﾙﾎﾞ	1	
-	NO PART NO.	#	ELBOW	ｴﾙﾎﾞ	2	[VLS]
5	03320-00110		O-RING	Oﾘﾝｸﾞ	1	
-	03320-00110		O-RING	Oﾘﾝｸﾞ	2	[VLS]
A3	04150-20404		ELBOW-ASSY	ｴﾙﾎﾞｱｯｾﾝ	1	INC.6,7
6	NO PART NO.	#	ELBOW	ｴﾙﾎﾞ	1	
7	03320-00180		O-RING	Oﾘﾝｸﾞ	1	
A4	277H7-60601		NIPPLE-ASSY	ﾆｯﾌﾟﾙｱｯｾﾝ	2	INC.8,9
8	NO PART NO.	#	NIPPLE	ﾆｯﾌﾟﾙ	2	
9	03320-00140		O-RING	Oﾘﾝｸﾞ	2	

FIG.141 VALVE CONTROL [2SV]

(F7Z273A0) ﾊﾞﾙﾌﾞｺﾝﾄﾛｰﾙ

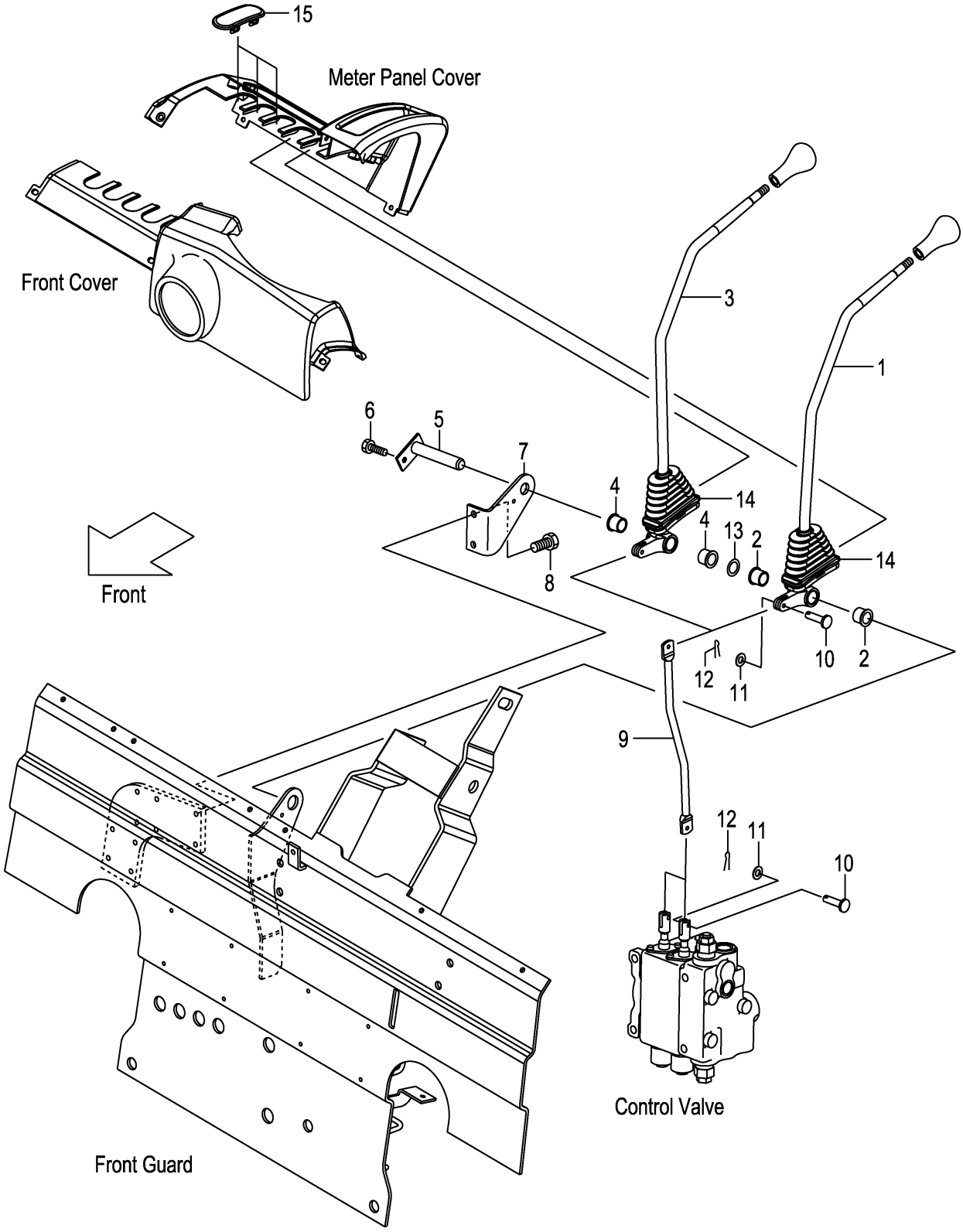

A:FD20C3Z FD20T3Z FD25C3Z FD25T3Z

Item No	Part No.	Mark	Description		Req'd	Remarks : Serial No.
A1	22N57-40011		LEVER-ASSY,LIFT	ﾘﾌﾄﾚﾊﾞｰｱｯｾﾝ	1	INC.1,2
1	NO PART NO.	#	LEVER,LIFT	ﾚﾊﾞｰ	1	
2	214A7-42071		BUSHING	ﾌﾞｯｼﾝｸﾞ	2	
A2	22N57-40021		LEVER-ASSY,TILT	ﾃｨﾙﾄﾚﾊﾞｰｱｯｾﾝ	1	INC.3,4
3	NO PART NO.	#	LEVER,TILT	ﾚﾊﾞｰ	1	
4	214A7-42071		BUSHING	ﾌﾞｯｼﾝｸﾞ	2	
5	23647-40041		SHAFT,2SV-LEVER	ｼｬﾌﾄ	1	
-	529F3-70401		SHAFT,2SV-LEVER	ｼｬﾌﾄ	1	[FC]
6	01183-06012		BOLT	ﾎﾞﾙﾄ	1	
7	22N57-42001		BRACKET,VALVE-LEVER	ﾌﾞﾗｹｯﾄ	1	
8	01183-08012		BOLT	ﾎﾞﾙﾄ	2	
9	22N57-42101		JOINT	ｼﾞｮｲﾝﾄ	2	
10	22N57-42121		PIN,CLEVIS	ﾋﾟﾝ	4	
11	02000-00005		WASHER	ﾜｯｼｬ	4	
12	02200-16010		PIN,COTTER	ﾋﾟﾝ	4	
13	22517-40051		SHIM,T-0.2	ｼﾑ	3	
14	22N57-42151		BOOT	ﾌﾞｰﾂ	2	
15	22N57-42161		COVER,VALVE-LEVER	ｶﾊﾞｰ	3	

FIG.142 VALVE CONTROL [3SV]

(F7Z273B0) ﾊﾞﾙﾌﾞｺﾝﾄﾛｰﾙ

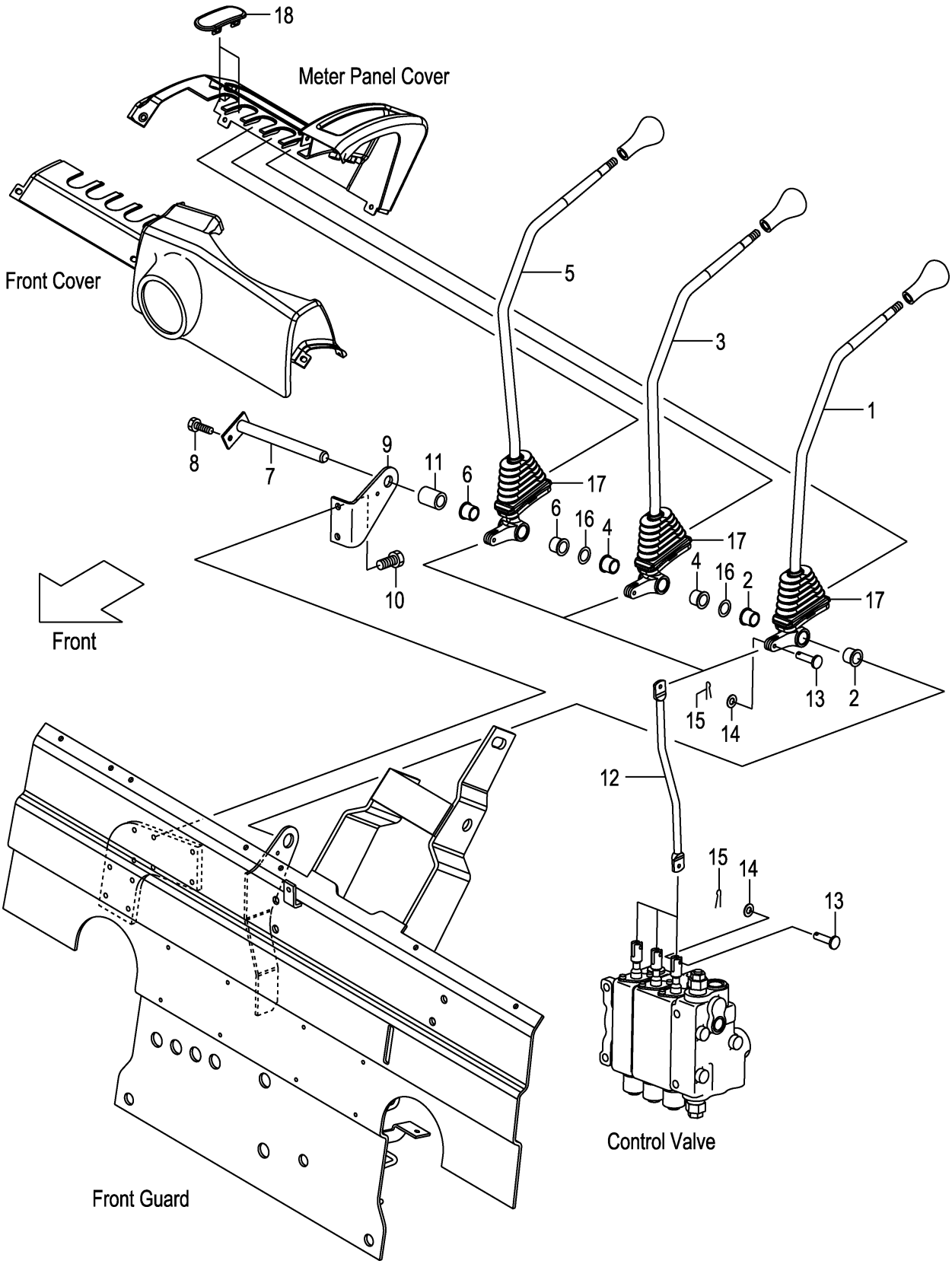

A:FD20C3Z FD20T3Z FD25C3Z FD25T3Z

Item No	Part No.	Mark	Description		Req'd	Remarks : Serial No.
A1	22N57-40011		LEVER-ASSY,LIFT	ﾘﾌﾄﾚﾊﾞｰｱｯｾﾝ	1	[3SV] INC.1,2
1	NO PART NO.	#	LEVER,LIFT	ﾚﾊﾞｰ	1	[3SV]
2	214A7-42071		BUSHING	ﾌﾞｯｼﾝｸﾞ	2	[3SV]
A2	22N57-40021		LEVER-ASSY,TILT	ﾃｨﾙﾄﾚﾊﾞｰｱｯｾﾝ	1	[3SV] INC.3,4
3	NO PART NO.	#	LEVER,TILT	ﾚﾊﾞｰ	1	[3SV]
4	214A7-42071		BUSHING	ﾌﾞｯｼﾝｸﾞ	2	[3SV]
A3	22N57-40031		LEVER-ASSY,THIRD	ｻｰﾄﾞﾚﾊﾞｰｱｯｾﾝ	1	[3SV] INC.5,6
5	NO PART NO.	#	LEVER,THIRD	ﾚﾊﾞｰ	1	[3SV]
6	214A7-42071		BUSHING	ﾌﾞｯｼﾝｸﾞ	2	[3SV]
7	23457-42041		SHAFT,3&4SV-LEVER	ｼｬﾌﾄ	1	[3SV]
-	529F3-70411		SHAFT,3&4SV-LEVER	ｼｬﾌﾄ	1	[3SV/FC]
8	01183-06012		BOLT	ﾎﾞﾙﾄ	1	[3SV]
9	22N57-42001		BRACKET,VALVE-LEVER	ﾌﾞﾗｹｯﾄ	1	[3SV]
10	01183-08012		BOLT	ﾎﾞﾙﾄ	2	[3SV]
11	23657-42131		COLLAR	ｶﾗｰ	1	[3SV]
12	22N57-42101		JOINT	ｼﾞｮｲﾝﾄ	3	[3SV]
13	22N57-42121		PIN,CLEVIS	ﾋﾟﾝ	6	[3SV]
14	02000-00005		WASHER	ﾜｯｼｬ	6	[3SV]
15	02200-16010		PIN,COTTER	ﾋﾟﾝ	6	[3SV]
16	22517-40051		SHIM,T-0.2	ｼﾑ	6	[3SV]
17	22N57-42151		BOOT	ﾌﾞｰﾂ	3	[3SV]
18	22N57-42161		COVER,VALVE-LEVER	ｶﾊﾞｰ	2	[3SV]

FIG.143 VALVE CONTROL [4SV]

(F7Z273C0) ﾊﾞﾙﾌﾞｺﾝﾄﾛｰﾙ

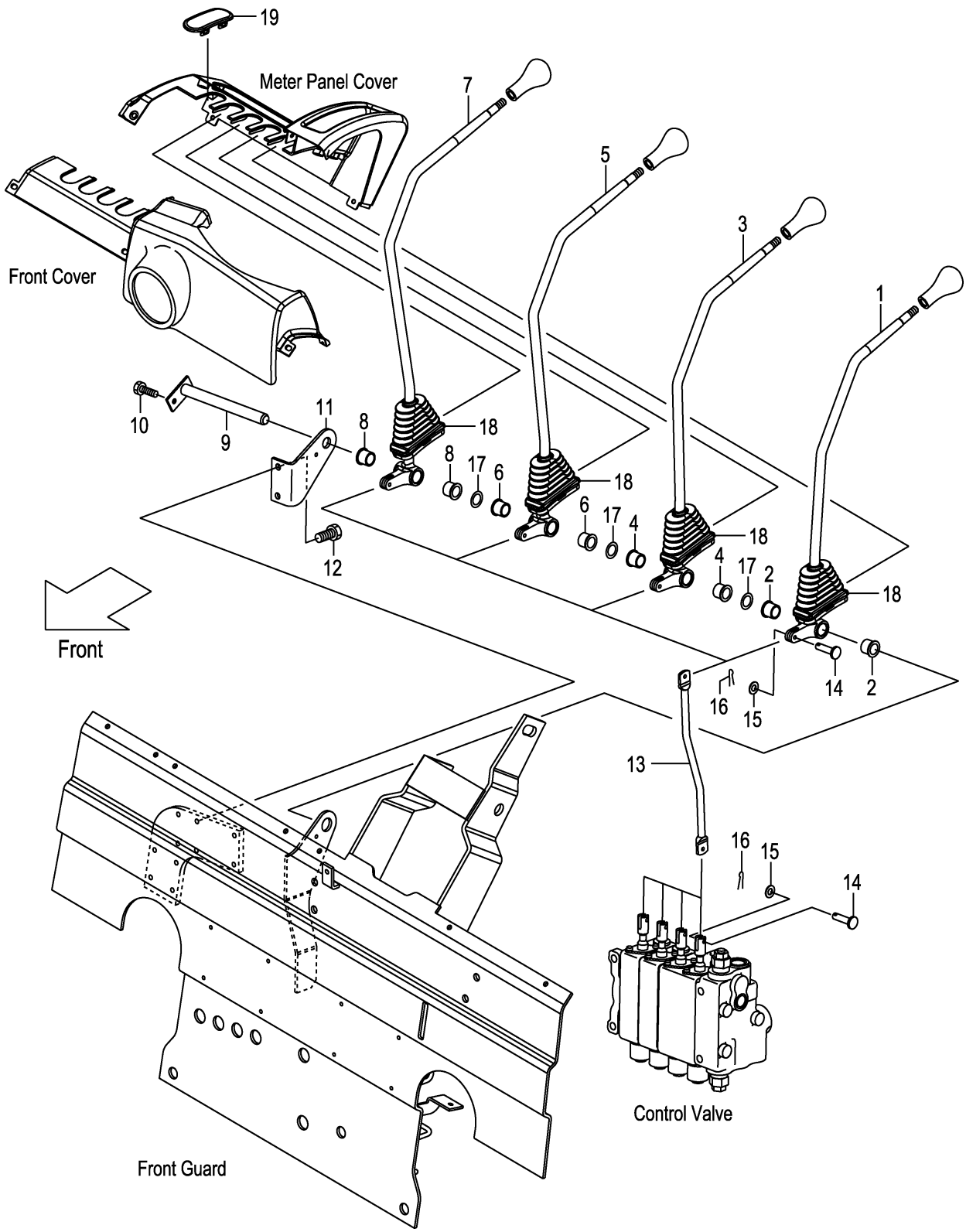

A:FD20C3Z FD20T3Z FD25C3Z FD25T3Z

Item No	Part No.	Mark	Description		Req'd	Remarks : Serial No.
A1	22N57-40011		LEVER-ASSY,LIFT	ﾘﾌﾄﾚﾊﾞｰｱｯｾﾝ	1	[4SV] INC.1,2
1	NO PART NO.	#	LEVER,LIFT	ﾚﾊﾞｰ	1	[4SV]
2	214A7-42071		BUSHING	ﾌﾞｯｼﾝｸﾞ	2	[4SV]
A2	22N57-40021		LEVER-ASSY,TILT	ﾃｨﾙﾄﾚﾊﾞｰｱｯｾﾝ	1	[4SV] INC.3,4
3	NO PART NO.	#	LEVER,TILT	ﾚﾊﾞｰ	1	[4SV]
4	214A7-42071		BUSHING	ﾌﾞｯｼﾝｸﾞ	2	[4SV]
A3	22N57-40031		LEVER-ASSY,THIRD	ｻｰﾄﾞﾚﾊﾞｰｱｯｾﾝ	1	[4SV] INC.5,6
5	NO PART NO.	#	LEVER,THIRD	ﾚﾊﾞｰ	1	[4SV]
6	214A7-42071		BUSHING	ﾌﾞｯｼﾝｸﾞ	2	[4SV]
A4	22N57-40041		LEVER-ASSY,FOURTH	ﾌｫｰｽﾚﾊﾞｰｱｯｾﾝ	1	[4SV] INC.7,8
7	NO PART NO.	#	LEVER,FOURTH	ﾚﾊﾞｰ	1	[4SV]
8	214A7-42071		BUSHING	ﾌﾞｯｼﾝｸﾞ	2	[4SV]
9	23457-42041		SHAFT,3&4SV-LEVER	ｼｬﾌﾄ	1	[4SV]
-	529F3-70411		SHAFT,3&4SV-LEVER	ｼｬﾌﾄ	1	[4SV/FC]
10	01183-06012		BOLT	ﾎﾞﾙﾄ	1	[4SV]
11	22N57-42001		BRACKET,VALVE-LEVER	ﾌﾞﾗｹｯﾄ	1	[4SV]
12	01183-08012		BOLT	ﾎﾞﾙﾄ	2	[4SV]
13	22N57-42101		JOINT	ｼﾞｮｲﾝﾄ	4	[4SV]
14	22N57-42121		PIN,CLEVIS	ﾋﾟﾝ	8	[4SV]
15	02000-00005		WASHER	ﾜｯｼｬ	8	[4SV]
16	02200-16010		PIN,COTTER	ﾋﾟﾝ	8	[4SV]
17	22517-40051		SHIM,T-0.2	ｼﾑ	9	[4SV]
18	22N57-42151		BOOT	ﾌﾞｰﾂ	4	[4SV]
19	22N57-42161		COVER,VALVE-LEVER	ｶﾊﾞｰ	1	[4SV]

FIG.144 VALVE CONTROL [5SV]

(F7Z273D0) ﾊﾞﾙﾌﾞｺﾝﾄﾛｰﾙ

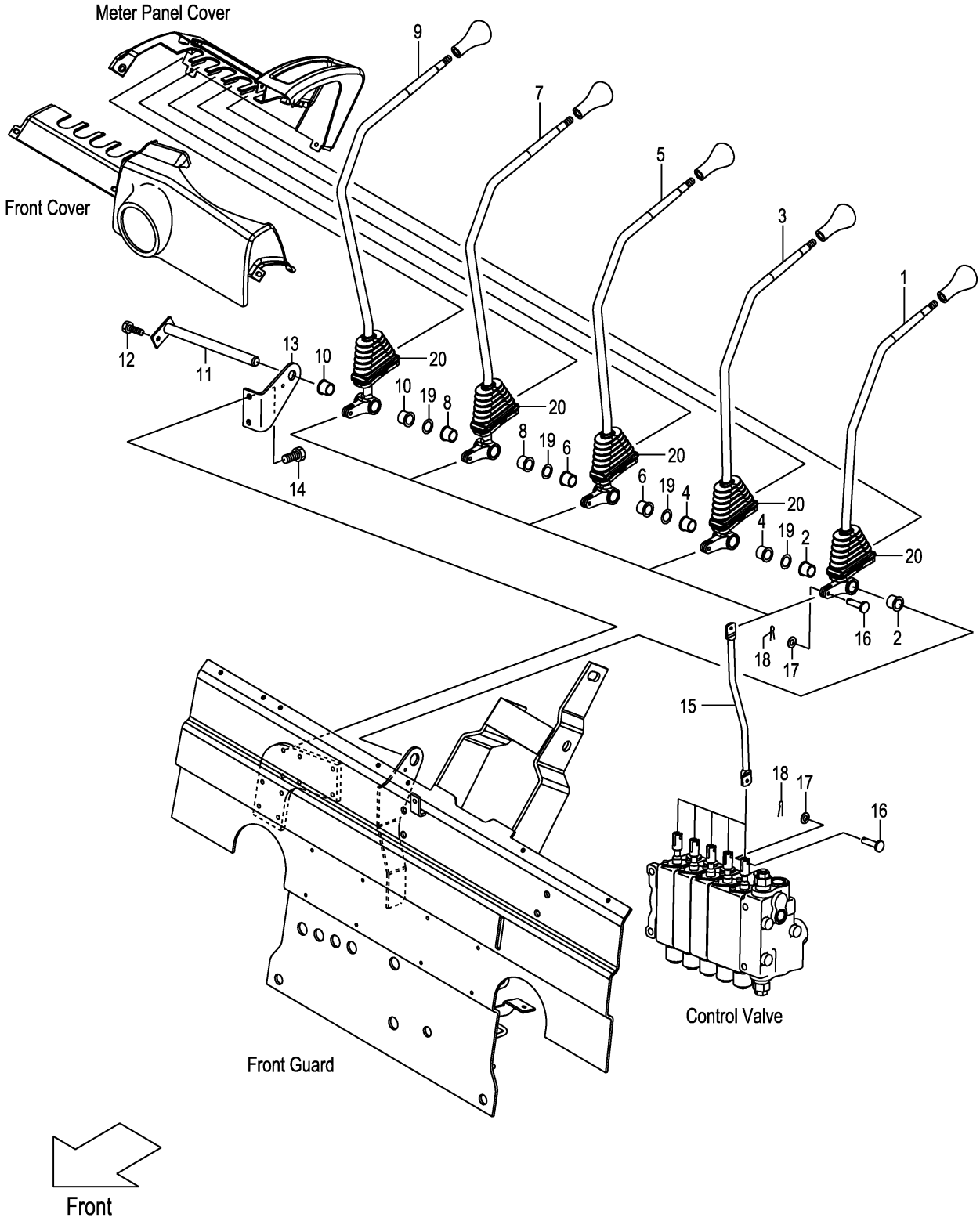

A:FD20C3Z FD20T3Z FD25C3Z FD25T3Z

Item No	Part No.	Mark	Description		Req'd	Remarks : Serial No.
A1	22N57-40011		LEVER-ASSY,LIFT	ﾘﾌﾄﾚﾊﾞｰｱｯｾﾝ	1	[5SV] INC.1,2
1	NO PART NO.	#	LEVER,LIFT	ﾚﾊﾞｰ	1	[5SV]
2	214A7-42071		BUSHING	ﾌﾞｯｼﾝｸﾞ	2	[5SV]
A2	22N57-40021		LEVER-ASSY,TILT	ﾃｨﾙﾄﾚﾊﾞｰｱｯｾﾝ	1	[5SV] INC.3,4
3	NO PART NO.	#	LEVER,TILT	ﾚﾊﾞｰ	1	[5SV]
4	214A7-42071		BUSHING	ﾌﾞｯｼﾝｸﾞ	2	[5SV]
A3	22N57-40031		LEVER-ASSY,THIRD	ｻｰﾄﾞﾚﾊﾞｰｱｯｾﾝ	1	[5SV] INC.5,6
5	NO PART NO.	#	LEVER,THIRD	ﾚﾊﾞｰ	1	[5SV]
6	214A7-42071		BUSHING	ﾌﾞｯｼﾝｸﾞ	2	[5SV]
A4	22N57-40041		LEVER-ASSY,FOURTH	ﾌｫｰｽﾚﾊﾞｰｱｯｾﾝ	1	[5SV] INC.7,8
7	NO PART NO.	#	LEVER,FOURTH	ﾚﾊﾞｰ	1	[5SV]
8	214A7-42071		BUSHING	ﾌﾞｯｼﾝｸﾞ	2	[5SV]
A5	22N57-40051		LEVER-ASSY,FIFTH	ﾌｨﾌｽﾚﾊﾞｰｱｯｾﾝ	1	[5SV] INC.9,10
9	NO PART NO.	#	LEVER,FIFTH	ﾚﾊﾞｰ	1	[5SV]
10	214A7-42071		BUSHING	ﾌﾞｯｼﾝｸﾞ	2	[5SV]
11	55593-02371		SHAFT,5SV-LEVER	ｼｬﾌﾄ	1	[5SV]
-	529F3-70421		SHAFT,5SV-LEVER	ｼｬﾌﾄ	1	[5SV/FC]
12	01183-06012		BOLT	ﾎﾞﾙﾄ	1	[5SV]
13	22N57-42001		BRACKET,VALVE-LEVER	ﾌﾞﾗｹｯﾄ	1	[5SV]
14	01183-08012		BOLT	ﾎﾞﾙﾄ	2	[5SV]
15	22N57-42101		JOINT	ｼﾞｮｲﾝﾄ	5	[5SV]
16	22N57-42121		PIN,CLEVIS	ﾋﾟﾝ	10	[5SV]
17	02000-00005		WASHER	ﾜｯｼｬ	10	[5SV]
18	02200-16010		PIN,COTTER	ﾋﾟﾝ	10	[5SV]
19	22517-40051		SHIM,T-0.2	ｼﾑ	12	[5SV]
20	22N57-42151		BOOT	ﾌﾞｰﾂ	5	[5SV]

FIG.145 VALVE CONTROL KNOB

(F7Z273E0) ﾊﾞﾙﾌﾞｺﾝﾄﾛｰﾙﾉﾌﾞ

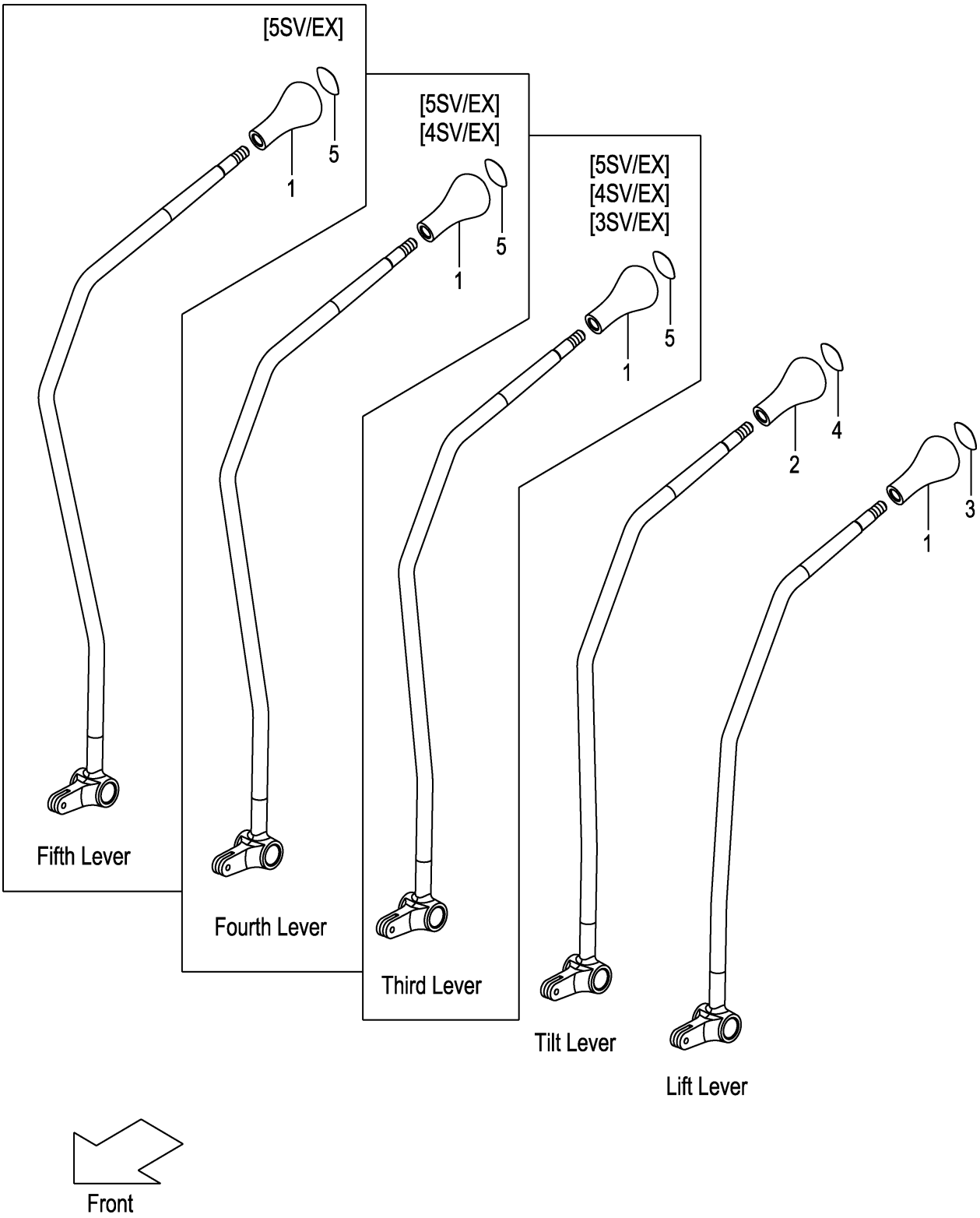

A:FD20C3Z FD20T3Z FD25C3Z FD25T3Z

Item No	Part No.	Mark	Description	Req'd	Remarks : Serial No.
1	214A7-42181		KNOB,VALVE-LEVER ﾉﾌﾞ	1	
-	214A7-42181		KNOB,VALVE-LEVER ﾉﾌﾞ	2	[3SV/EX]
-	214A7-42181		KNOB,VALVE-LEVER ﾉﾌﾞ	3	[4SV/EX]
-	214A7-42181		KNOB,VALVE-LEVER ﾉﾌﾞ	4	[5SV/EX]
2	281E7-42101		KNOB,VALVE-LEVER ﾉﾌﾞ	1	
3	214A7-42191		DECAL,SYMBOL,LIFT ﾃﾞｶﾙ	1	
4	214A7-42201		DECAL,SYMBOL,TILT ﾃﾞｶﾙ	1	
5	514A2-72411		DECAL,SYMBOL,SPACE ﾃﾞｶﾙ	1	[3SV/EX]
-	514A2-72411		DECAL,SYMBOL,SPACE ﾃﾞｶﾙ	2	[4SV/EX]
-	514A2-72411		DECAL,SYMBOL,SPACE ﾃﾞｶﾙ	3	[5SV/EX]

FIG.146 HYDRAULIC LINE (MAIN)(1/4)

(F7Z27630) ﾊｲﾄﾞﾛﾘｯｸﾗｲﾝ(ﾒｲﾝ)(1/4)

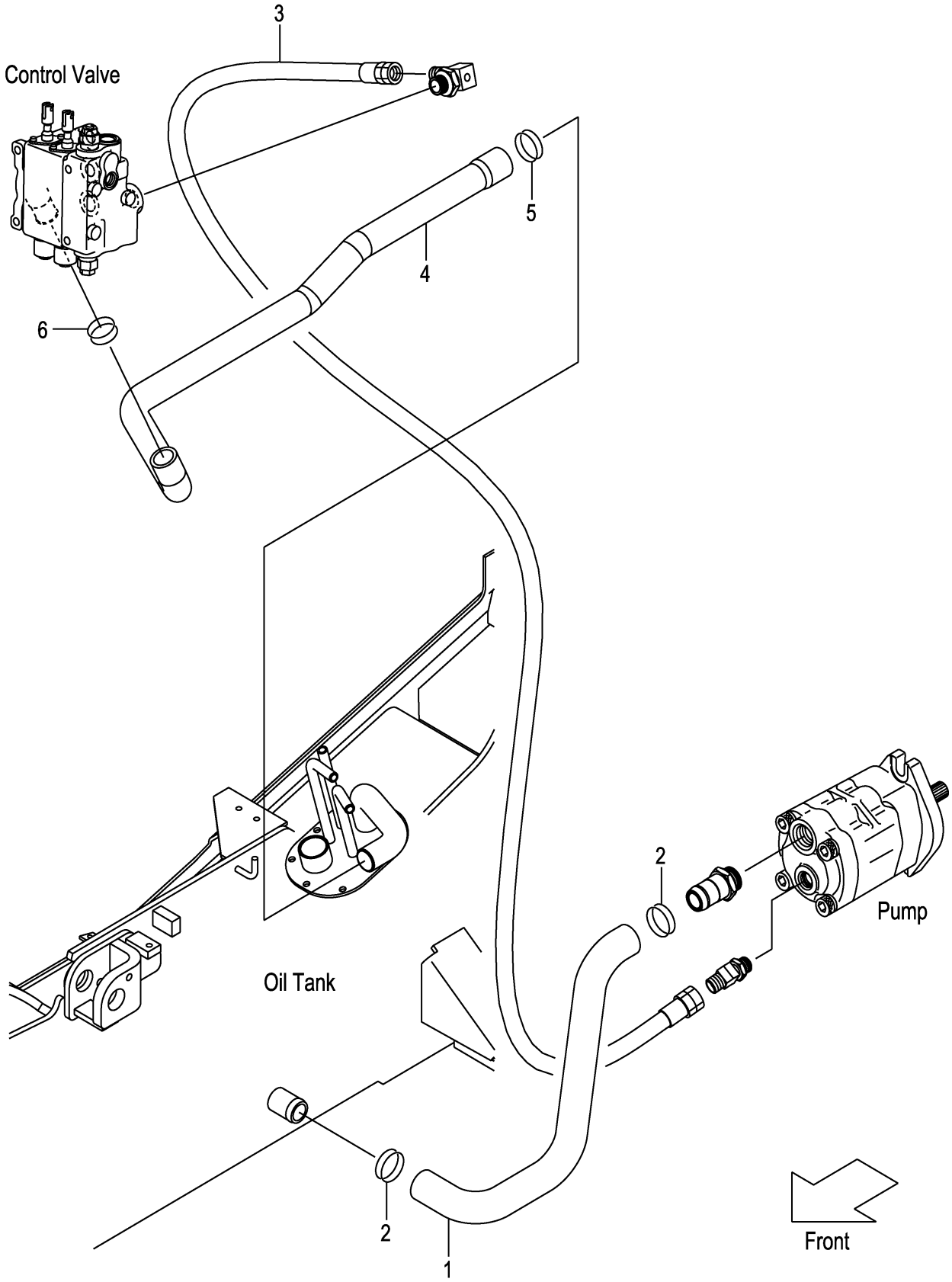

FIG.146

(F7Z27630)

A:FD20C3Z FD20T3Z FD25C3Z FD25T3Z

Item No	Part No.	Mark	Description		Req'd	Remarks : Serial No.
1	22U57-62001		HOSE,SUCTION	ﾎｰｽ	1	
2	04911-00046		CLIP	ｸﾘｯﾌﾟ	2	
3	22N57-63001		HOSE	ﾎｰｽ	1	1-109
-	04691-04123		HOSE	ﾎｰｽ	1	110-
4	22N57-62101		HOSE,RETURN	ﾎｰｽ	1	
-	22N57-62201		HOSE,RETURN	ﾎｰｽ	1	[4SV][5SV]
5	04911-00044		CLIP	ｸﾘｯﾌﾟ	1	1-109
-	04911-00042		CLIP	ｸﾘｯﾌﾟ	1	110-
6	04911-00040		CLIP	ｸﾘｯﾌﾟ	1	

FIG.147 HYDRAULIC LINE (MAIN)(2/4)

(F7Z27650) ﾊｲﾄﾞﾛﾘｯｸﾗｲﾝ(ﾒｲﾝ)(2/4)

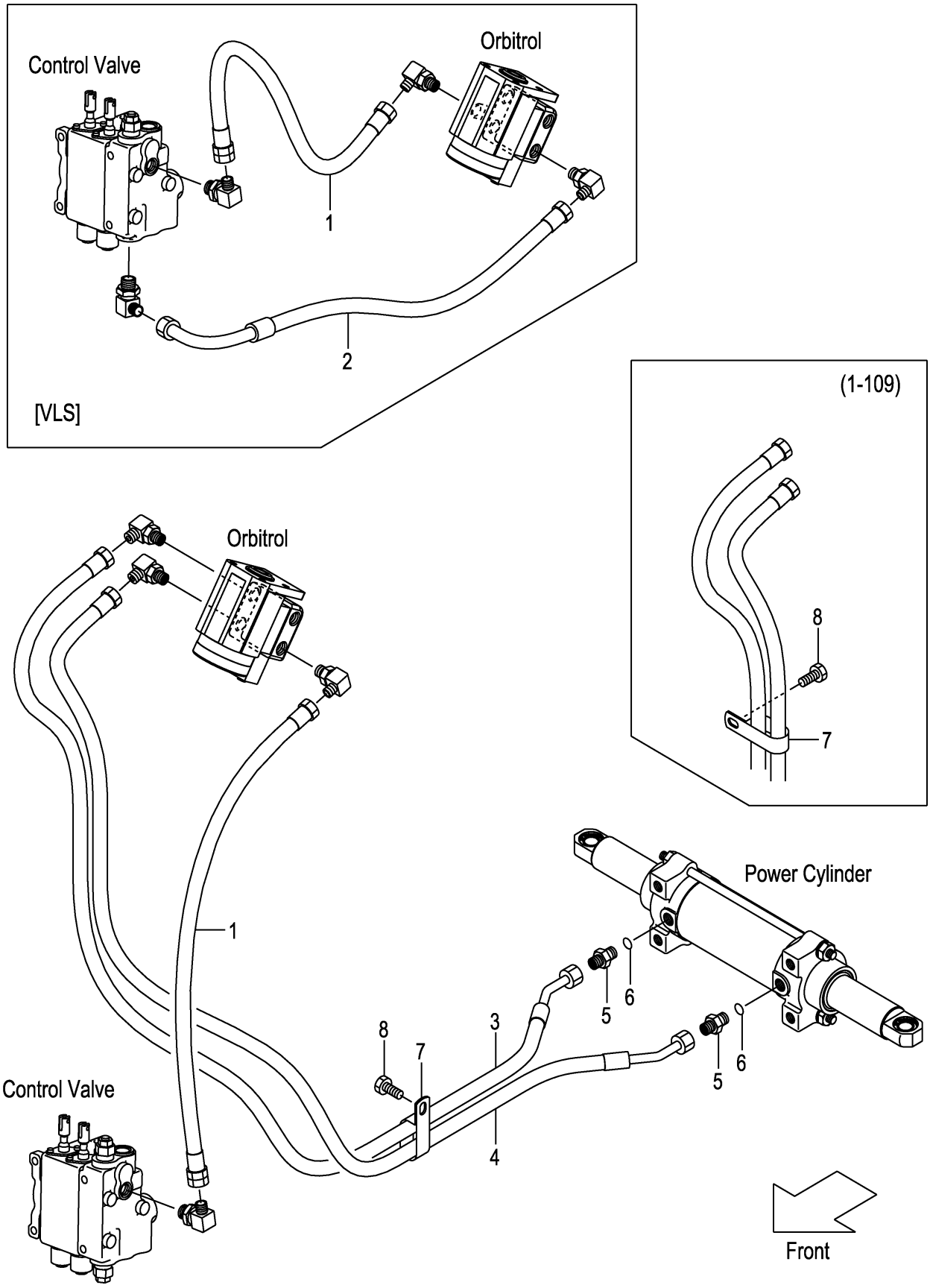

A:FD20C3Z FD20T3Z FD25C3Z FD25T3Z

Item No	Part No.	Mark	Description		Req'd	Remarks : Serial No.
1	04691-02035		HOSE	ﾎｰｽ	1	1-109
-	04691-02038		HOSE	ﾎｰｽ	1	110-
-	04691-02035		HOSE	ﾎｰｽ	1	[VLS]
2	22N57-62801		HOSE	ﾎｰｽ	1	[VLS]
3	22N57-62381		HOSE,PS,FRONT	ﾎｰｽ	1	
4	22N57-62391		HOSE,PS,FRONT	ﾎｰｽ	1	
A1	04134-20303		NIPPLE-ASSY	ﾆｯﾌﾟﾙｱｯｾﾝ	2	INC.5,6
5	NO PART NO.	#	NIPPLE	ﾆｯﾌﾟﾙ	2	
6	03320-00140		O-RING	Oﾘﾝｸﾞ	2	
7	26602-42221		CLIP	ｸﾘｯﾌﾟ	2	1-109
-	26602-42221		CLIP	ｸﾘｯﾌﾟ	1	110-
8	01185-08016		BOLT	ﾎﾞﾙﾄ	2	1-109
-	01185-08016		BOLT	ﾎﾞﾙﾄ	1	110-

FIG.148 HYDRAULIC LINE (MAIN)(3/4)

(F7Z27660) ﾊｲﾄﾞﾛﾘｯｸﾗｲﾝ(ﾒｲﾝ)(3/4)

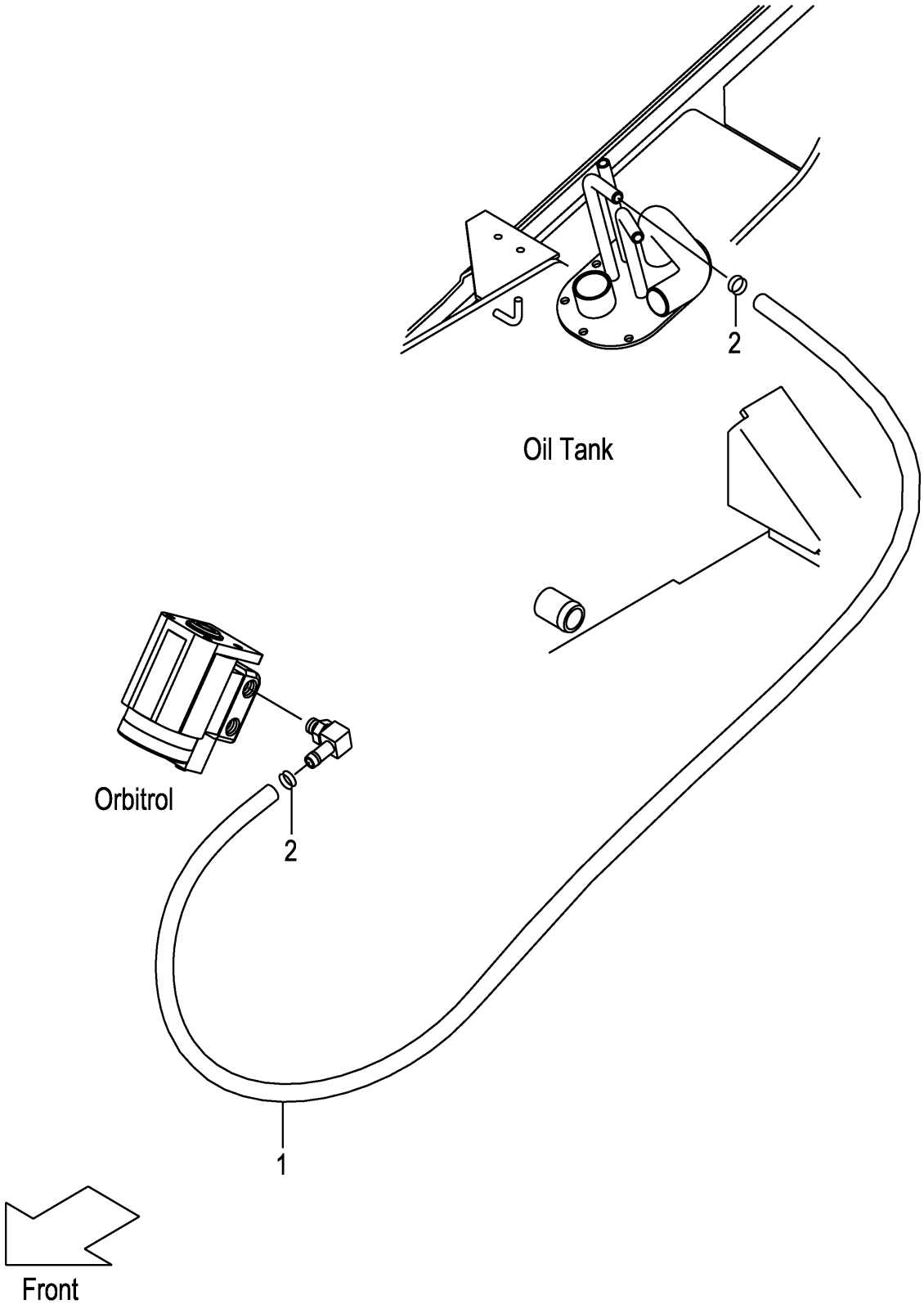

FIG.148

(F7Z27660)

A:FD20C3Z FD20T3Z FD25C3Z FD25T3Z

Item No	Part No.	Mark	Description	Req'd	Remarks : Serial No.
1	04710-04190		HOSE ﾎｰｽ	1	
2	04911-00020		CLIP ｸﾘｯﾌﾟ	2	

FIG.149 HYDRAULIC LINE (MAIN)(4/4)

(F7Z27690) ﾊｲﾄﾞﾛﾘｯｸﾗｲﾝ(ﾒｲﾝ)(4/4)

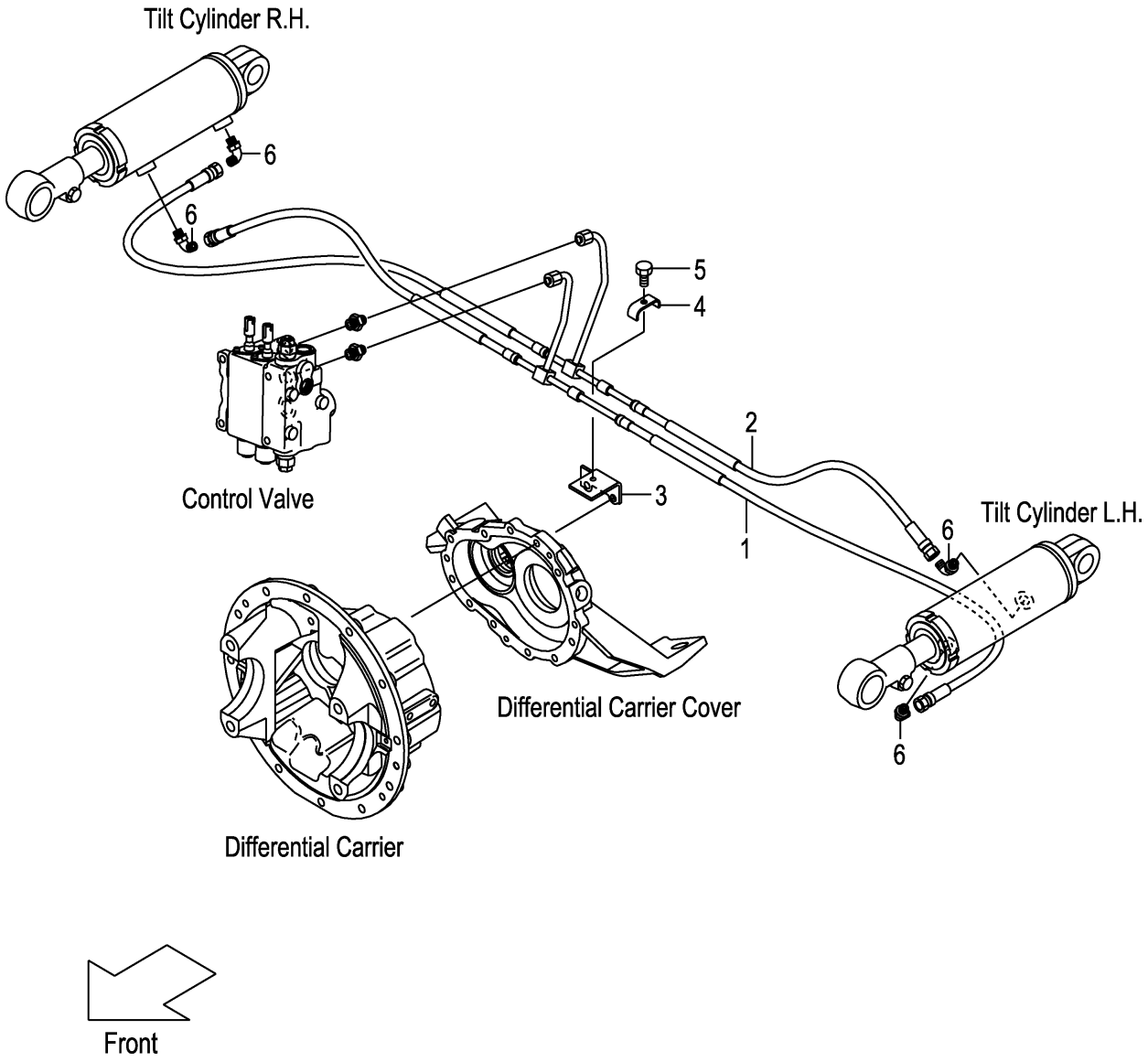

FIG.149

(F7Z27690)

A:FD20C3Z FD20T3Z FD25C3Z FD25T3Z

Item No	Part No.	Mark	Description		Req'd	Remarks : Serial No.
1	22N57-62401		HOSE,TILT,FRONT	ﾎｰｽ	1	
2	22N57-62451		HOSE,TILT,REAR	ﾎｰｽ	1	
3	22N57-62531		BRACKET,TILT-PIPE	ﾌﾞﾗｹｯﾄ	1	
4	281E7-62041		CLIP,HOSE	ｸﾘｯﾌﾟ	1	
5	01183-08025		BOLT	ﾎﾞﾙﾄ	1	
6	22N57-62221		ELBOW	ｴﾙﾎﾞ	4	

FIG.150 HYDRAULIC LINE (TOR-CON)

(F7Z276A0) ﾊｲﾄﾞﾛﾘｯｸﾗｲﾝ(ﾄﾙｺﾝ)

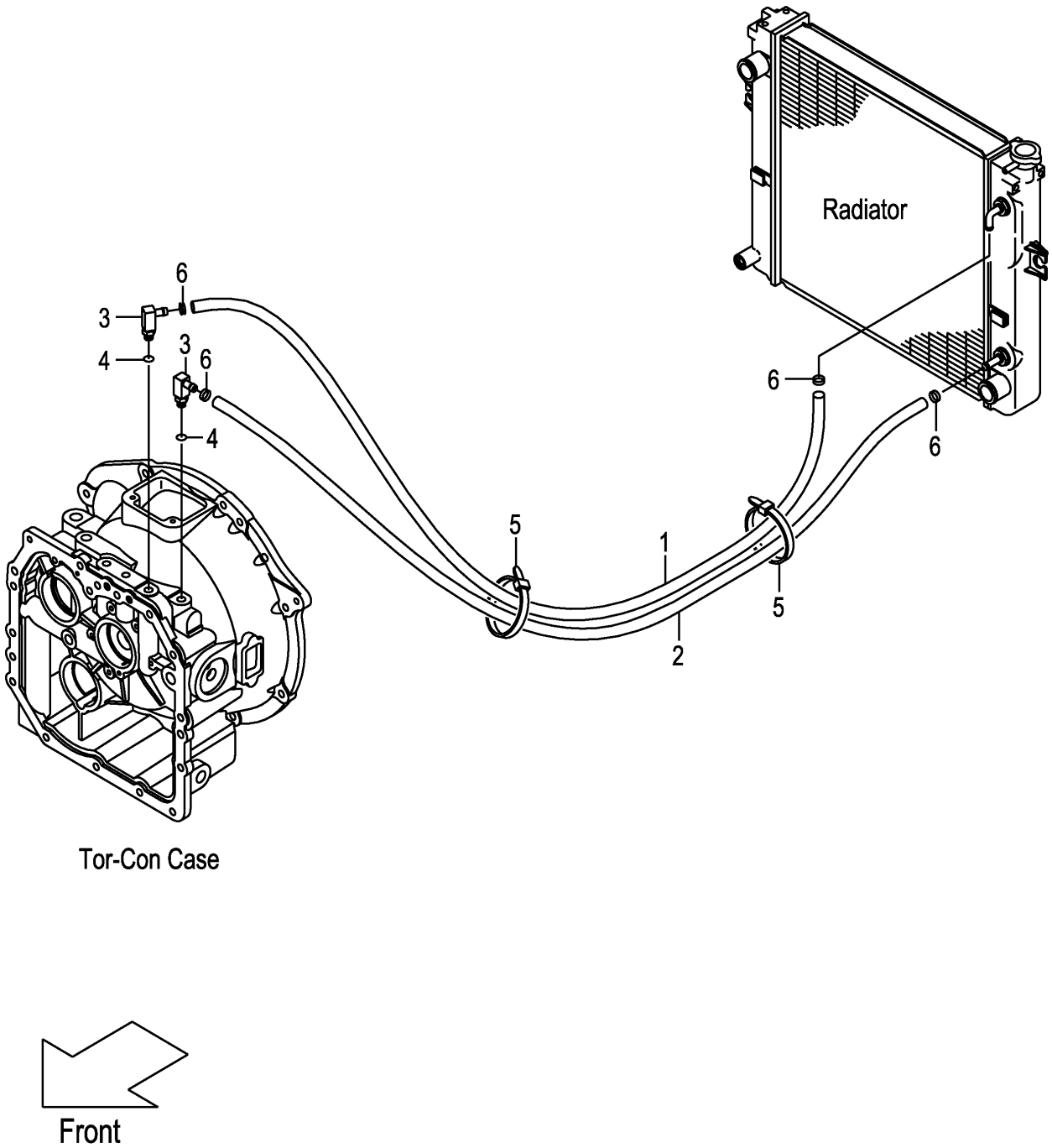

A:FD20T3Z FD25T3Z

Item No	Part No.	Mark	Description		Req'd	Remarks : Serial No.
1	216H7-82111		HOSE,OIL-COOLER	ﾎｰｽ	1	
2	22S57-82001		HOSE,OIL-COOLER	ﾎｰｽ	1	
A1	22N57-80201		FITTING-ASSY,HOSE	ﾎｰｽﾌｨｯﾃｨﾝｸﾞｱｯｾﾝ	2	INC.3,4
3	NO PART NO.	#	FITTING,HOSE	ﾌｨｯﾃｨﾝｸﾞ	2	
4	03320-00140		O-RING	Oﾘﾝｸﾞ	2	
5	27042-42322		BAND	ﾊﾞﾝﾄﾞ	2	
6	04911-00023		CLIP	ｸﾘｯﾌﾟ	4	

FIG.151 TILT CYLINDER

(F7Z28510) ﾃｨﾙﾄｼﾘﾝﾀﾞ

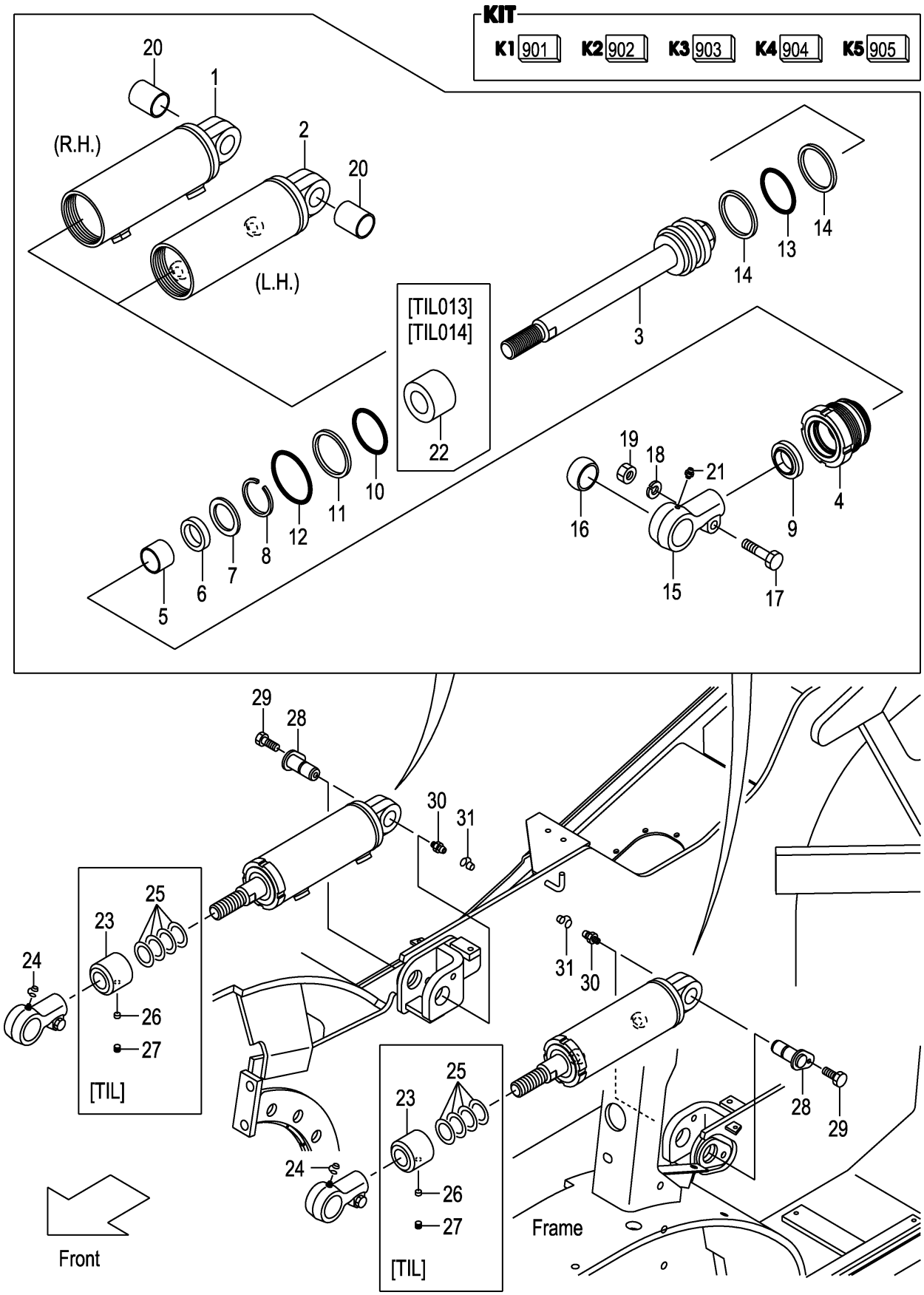

A:FD20C3Z FD20T3Z FD25C3Z FD25T3Z

Item No	Part No.	Mark	Description		Req'd	Remarks : Serial No.
A1	22N58-50101		CYL-ASSY,TILT,RH	ﾃｨﾙﾄｼﾘﾝﾀﾞｱｯｾﾝ	1	(6-12 DEG.) INC.1,3-21
-	22N58-50131		CYL-ASSY,TILT,RH	ﾃｨﾙﾄｼﾘﾝﾀﾞｱｯｾﾝ	1	[TIL013](3-3 DEG.) INC.1,3-23
-	22N58-50121		CYL-ASSY,TILT,RH	ﾃｨﾙﾄｼﾘﾝﾀﾞｱｯｾﾝ	1	[TIL014](3-6 DEG.) INC.1,3-23
-	22N58-50111		CYL-ASSY,TILT,RH	ﾃｨﾙﾄｼﾘﾝﾀﾞｱｯｾﾝ	1	[TIL016](6-6 DEG.) INC.1,3-21,23
-	22N58-50141		CYL-ASSY,TILT,RH	ﾃｨﾙﾄｼﾘﾝﾀﾞｱｯｾﾝ	1	[TIL017](6-10 DEG.) INC.1,3-21,23
A2	22N58-50201		CYL-ASSY,TILT,LH	ﾃｨﾙﾄｼﾘﾝﾀﾞｱｯｾﾝ	1	(6-12 DEG.) INC.2-21
-	22N58-50231		CYL-ASSY,TILT,LH	ﾃｨﾙﾄｼﾘﾝﾀﾞｱｯｾﾝ	1	[TIL013](3-3 DEG.) INC.2-23
-	22N58-50221		CYL-ASSY,TILT,LH	ﾃｨﾙﾄｼﾘﾝﾀﾞｱｯｾﾝ	1	[TIL014](3-6 DEG.) INC.2-23
-	22N58-50211		CYL-ASSY,TILT,LH	ﾃｨﾙﾄｼﾘﾝﾀﾞｱｯｾﾝ	1	[TIL016](6-6 DEG.) INC.2-21,23
-	22N58-50241		CYL-ASSY,TILT,LH	ﾃｨﾙﾄｼﾘﾝﾀﾞｱｯｾﾝ	1	[TIL017](6-10 DEG.) INC.2-21,23
901	22N58-52921	K1	KIT,REPAIR,CYL	ﾘﾍﾟｱｷｯﾄ	2	INC.6,9-14
902	22N58-52901	K2	KIT,CYL-BODY,RH	ｼﾘﾝﾀﾞﾎﾞﾃﾞｨｷｯﾄ	1	INC.1,20
903	22N58-52911	K3	KIT,CYL-BODY,LH	ｼﾘﾝﾀﾞﾎﾞﾃﾞｨｷｯﾄ	1	INC.2,20
904	22N58-52931	K4	KIT,ROD-HEAD	ﾛｯﾄﾞﾍｯﾄﾞｷｯﾄ	2	INC.15,16
905	22N58-52941	K5	KIT,CYL-HEAD	ｼﾘﾝﾀﾞﾍｯﾄﾞｷｯﾄ	2	INC.4,5
1	NO PART NO.	#*	BODY,CYL,RH	ﾎﾞﾃﾞｨ	1	
2	NO PART NO.	#*	BODY,CYL,LH	ﾎﾞﾃﾞｨ	1	
3	22N58-52801		ROD,PISTON	ﾛｯﾄﾞ	2	
4	NO PART NO.	#*	HEAD,CYL	ﾍｯﾄﾞ	2	
5	NO PART NO.	#*	BUSHING	ﾌﾞｯｼﾝｸﾞ	2	
6	NO PART NO.	#*	U-RING	Uﾘﾝｸﾞ	2	
7	22N58-52811		SPACER	ｽﾍﾟｰｻ	2	
8	22N58-52821		RING,SNAP	ｽﾅｯﾌﾟﾘﾝｸﾞ	2	
9	NO PART NO.	#*	RING,WIPER	ﾘﾝｸﾞ	2	
10	NO PART NO.	#*	O-RING	Oﾘﾝｸﾞ	2	
11	NO PART NO.	#*	RING,BACK-UP	ﾘﾝｸﾞ	2	
12	NO PART NO.	#*	O-RING	Oﾘﾝｸﾞ	2	
13	NO PART NO.	#*	O-RING	Oﾘﾝｸﾞ	2	
14	NO PART NO.	#*	RING,BACK-UP	ﾘﾝｸﾞ	4	
15	NO PART NO.	#*	HEAD,ROD	ﾍｯﾄﾞ	2	
16	NO PART NO.	#*	BUSHING,PIN	ﾌﾞｯｼﾝｸﾞ	2	
17	22N58-52831		BOLT	ﾎﾞﾙﾄ	2	
18	22N58-52841		WASHER	ﾜｯｼｬ	2	
19	22N58-52851		NUT	ﾅｯﾄ	2	
20	NO PART NO.	#*	BUSHING,PIN	ﾌﾞｯｼﾝｸﾞ	2	
21	22N58-52861		NIPPLE,GREASE	ﾆｯﾌﾟﾙ	2	
22	22N58-52871		SPACER	ｽﾍﾟｰｻ	2	[TIL013][TIL014] (3-3,3-6 DEG.)
23	22N58-52111		SPACER	ｽﾍﾟｰｻ	2	[TIL013](3-3 DEG.)
-	22N58-52101		SPACER	ｽﾍﾟｰｻ	2	[TIL014][TIL016] (3-6,6-6 DEG.)
-	22N58-52121		SPACER	ｽﾍﾟｰｻ	2	[TIL017](6-10 DEG.)
24	22199-12401		CAP,NIPPLE	ｷｬｯﾌﾟ	2	
25	23658-52101		SHIM	ｼﾑ	8	[TIL013][TIL014] (3-3,3-6 DEG.)
-	23658-52101		SHIM	ｼﾑ	8	[TIL016][TIL017] (6-6,6-10 DEG.)

FIG.151 TILT CYLINDER

(F7Z28510) ﾃｨﾙﾄｼﾘﾝﾀﾞ

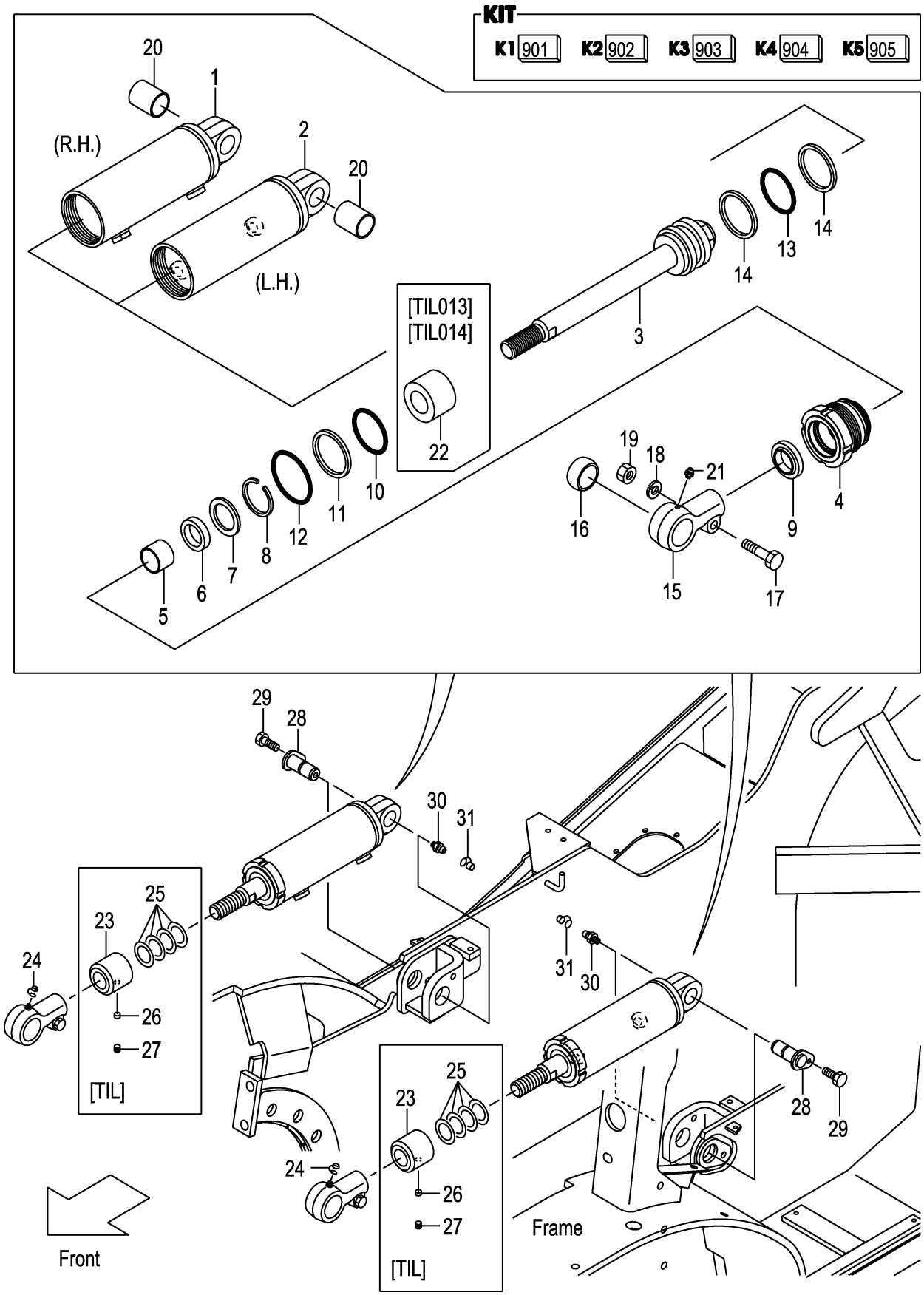

A:FD20C3Z FD20T3Z FD25C3Z FD25T3Z

Item No	Part No.	Mark	Description		Req'd	Remarks : Serial No.
26	01066-10012		SCREW,SET	ｽｸﾘｭ	2	[TIL013][TIL014] (3-3,3-6 DEG.)
-	01066-10012		SCREW,SET	ｽｸﾘｭ	2	[TIL016][TIL017] (6-6,6-10 DEG.)
27	23658-52401		PLUG,NYLON	ﾌﾟﾗｸﾞ	2	[TIL013][TIL014] (3-3,3-6 DEG.)
-	23658-52401		PLUG,NYLON	ﾌﾟﾗｸﾞ	2	[TIL016][TIL017] (6-6,6-10 DEG.)
28	22N58-52301		PIN	ﾋﾟﾝ	2	
29	01186-10016		BOLT	ﾎﾞﾙﾄ	2	
30	04901-00100		FITTING	ﾌｨｯﾃｨﾝｸﾞ	2	
31	22199-12401		CAP,NIPPLE	ｷｬｯﾌﾟ	2	

M E M O

M E M O

FIG.152 TILT BOOT [TLB][FC]

(F7Z28520) ﾃｨﾙﾄﾌﾞｰﾂ

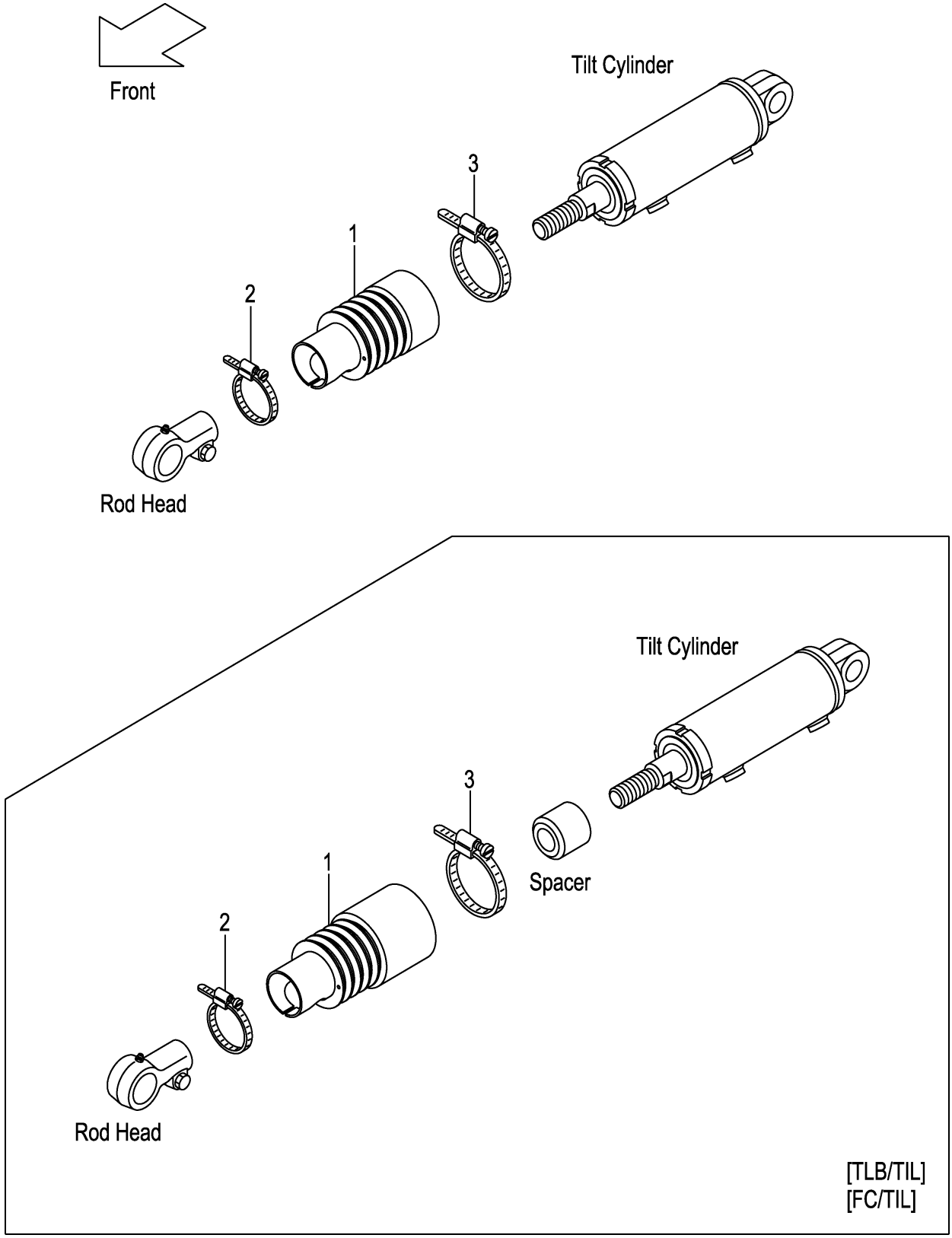

A:FD20C3Z FD20T3Z FD25C3Z FD25T3Z

Item No	Part No.	Mark	Description	Req'd	Remarks : Serial No.
A1	22N58-50301		BOOT-ASSY,TILT-CYL ﾃｨﾙﾄｼﾘﾝﾀﾞﾌﾞｰﾂｱｯｾﾝ	2	[TLB][FC](6-12 DEG.) INC.1-3
-	22N58-50311		BOOT-ASSY,TILT-CYL ﾃｨﾙﾄｼﾘﾝﾀﾞﾌﾞｰﾂｱｯｾﾝ	2	[TLB/TIL013&014] (3-3,3-6 DEG.) INC.1-3
-	22N58-50311		BOOT-ASSY,TILT-CYL ﾃｨﾙﾄｼﾘﾝﾀﾞﾌﾞｰﾂｱｯｾﾝ	2	[TLB/TIL016&017] (6-6,6-10 DEG.) INC.1-3
-	22N58-50311		BOOT-ASSY,TILT-CYL ﾃｨﾙﾄｼﾘﾝﾀﾞﾌﾞｰﾂｱｯｾﾝ	2	[FC/TIL013&014](3-3,3-6 DEG.) INC.1-3
-	22N58-50311		BOOT-ASSY,TILT-CYL ﾃｨﾙﾄｼﾘﾝﾀﾞﾌﾞｰﾂｱｯｾﾝ	2	[FC/TIL016&017] (6-6,6-10 DEG.) INC.1-3
1	22N58-53001		BOOT,TILT-CYL ﾌﾞｰﾂ	2	[TLB][FC](6-12 DEG.)
-	22N58-53101		BOOT,TILT-CYL ﾌﾞｰﾂ	2	[TLB/TIL013&014] [FC/TIL013&014](3-3,3-6 DEG.)
-	22N58-53101		BOOT,TILT-CYL ﾌﾞｰﾂ	2	[TLB/TIL016&017] [FC/TIL016&017] (6-6,6-10 DEG.)
2	216G8-53001		BAND,50 ﾊﾞﾝﾄﾞ	2	[TLB][FC]
-	216G8-53011		BAND,55 ﾊﾞﾝﾄﾞ	(2)	[TLB][FC]
3	224T8-53021		BAND,115 ﾊﾞﾝﾄﾞ	2	[TLB][FC]

FIG.153 DECAL (1/2)

(F7Z29110) ﾃﾞｶﾙ(1/2)

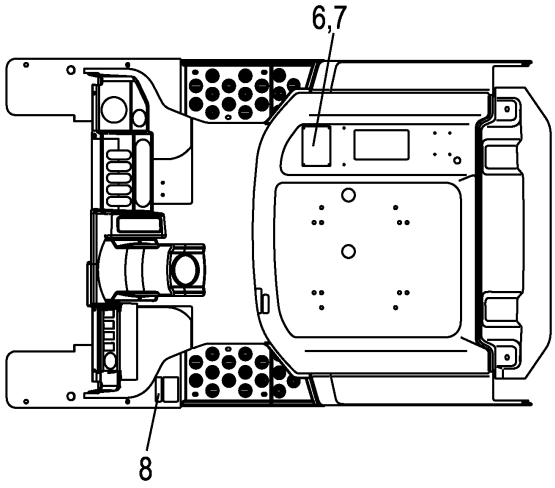

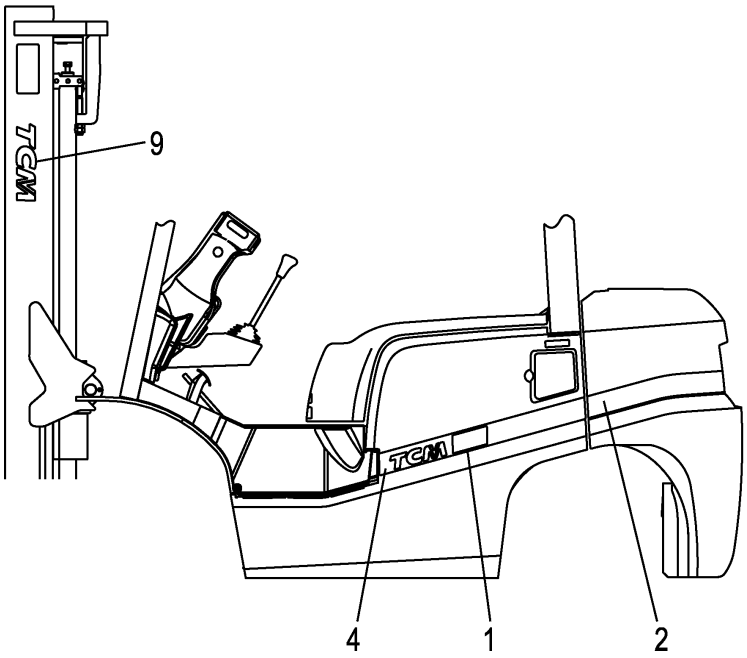

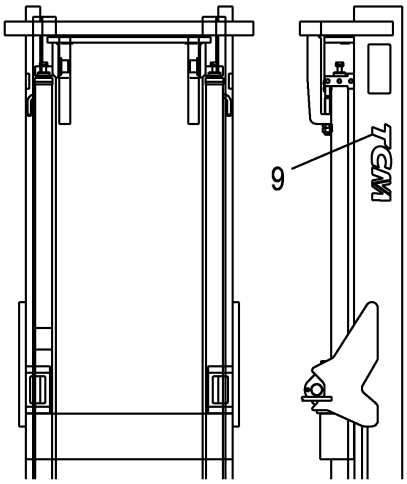

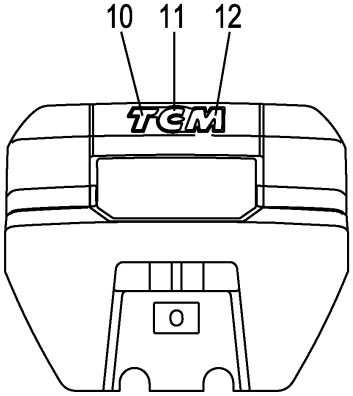

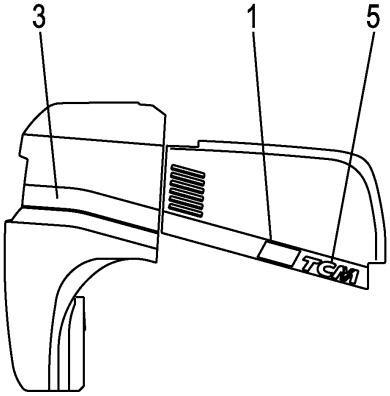

A:FD20C3Z FD20T3Z
B:FD25C3Z FD25T3Z

Item No	Part No.	Mark	Description		Req'd	Remarks : Serial No.
901	C-11452-2N5-D	K1	KIT,DECAL,JPN	ﾃﾞｶﾙｷｯﾄ	1	INC.8,9,FIG.154:3-15
-	C-11452-2N0-E	K1	KIT,DECAL,ENGLISH	ﾃﾞｶﾙｷｯﾄ	1	[EXB/ENGLISH]
						INC.8,9,FIG.155:3-11,14-21
-	C-11452-2N0-C	K1	KIT,DECAL,CHINESE	ﾃﾞｶﾙｷｯﾄ	1	[EXB/CHINESE]
						INC.8,9,FIG.155:3-19,21
1	22N19-12281		DECAL,MODEL-MARK,20	ﾃﾞｶﾙ	2	A
-	22N59-12281		DECAL,MODEL-MARK,25	ﾃﾞｶﾙ	2	B
2	22N19-12151		LINE,WEIGHT,LH	ﾗｲﾝ	1	A
-	22N19-12171		LINE,WEIGHT,LH	ﾗｲﾝ	1	A
						[ATF]
-	22N59-12151		LINE,WEIGHT,LH	ﾗｲﾝ	1	B
-	22N59-12171		LINE,WEIGHT,LH	ﾗｲﾝ	1	B
						[ATF]
3	22N19-12161		LINE,WEIGHT,RH	ﾗｲﾝ	1	A
-	22N19-12181		LINE,WEIGHT,RH	ﾗｲﾝ	1	A
						[ATF]
-	22N59-12161		LINE,WEIGHT,RH	ﾗｲﾝ	1	B
-	22N59-12181		LINE,WEIGHT,RH	ﾗｲﾝ	1	B
						[ATF]
4	22N59-12101		LINE,COVER,LH	ﾗｲﾝ	1	
5	22N59-12111		LINE,COVER,RH	ﾗｲﾝ	1	
6	22N19-12601		CHART,CAPACITY,2.0T	ﾁｬｰﾄ	1	A
						(VM200-500)
-	27419-12101		CHART,CAPACITY,2.0T	ﾁｬｰﾄ	1	A
						(VM550-600)
-	22N59-12601		CHART,CAPACITY,2.5T	ﾁｬｰﾄ	1	B
						(VM200-500)
-	27539-12021		CHART,CAPACITY,2.5T	ﾁｬｰﾄ	1	B
						(VM550-600)
-	63110-18921		CHART,CAPACITY	ﾁｬｰﾄ	1	[EXB/CHINESE]
7	02432-01008		RIVET	ﾘﾍﾞｯﾄ	4	
8	27049-12172	*	DECAL,AIR-PRESSURE	ﾃﾞｶﾙ	1	
9	273A9-12242	*	DECAL,TCM	ﾃﾞｶﾙ	2	
10	22N59-12041		DECAL,B/WEIGHT,T	ﾃﾞｶﾙ	1	
11	22N59-12051		DECAL,B/WEIGHT,C	ﾃﾞｶﾙ	1	
12	22N59-12061		DECAL,B/WEIGHT,M	ﾃﾞｶﾙ	1	

FIG.154 DECAL (2/2)

(F7Z29120) ﾃﾞｶﾙ(2/2)

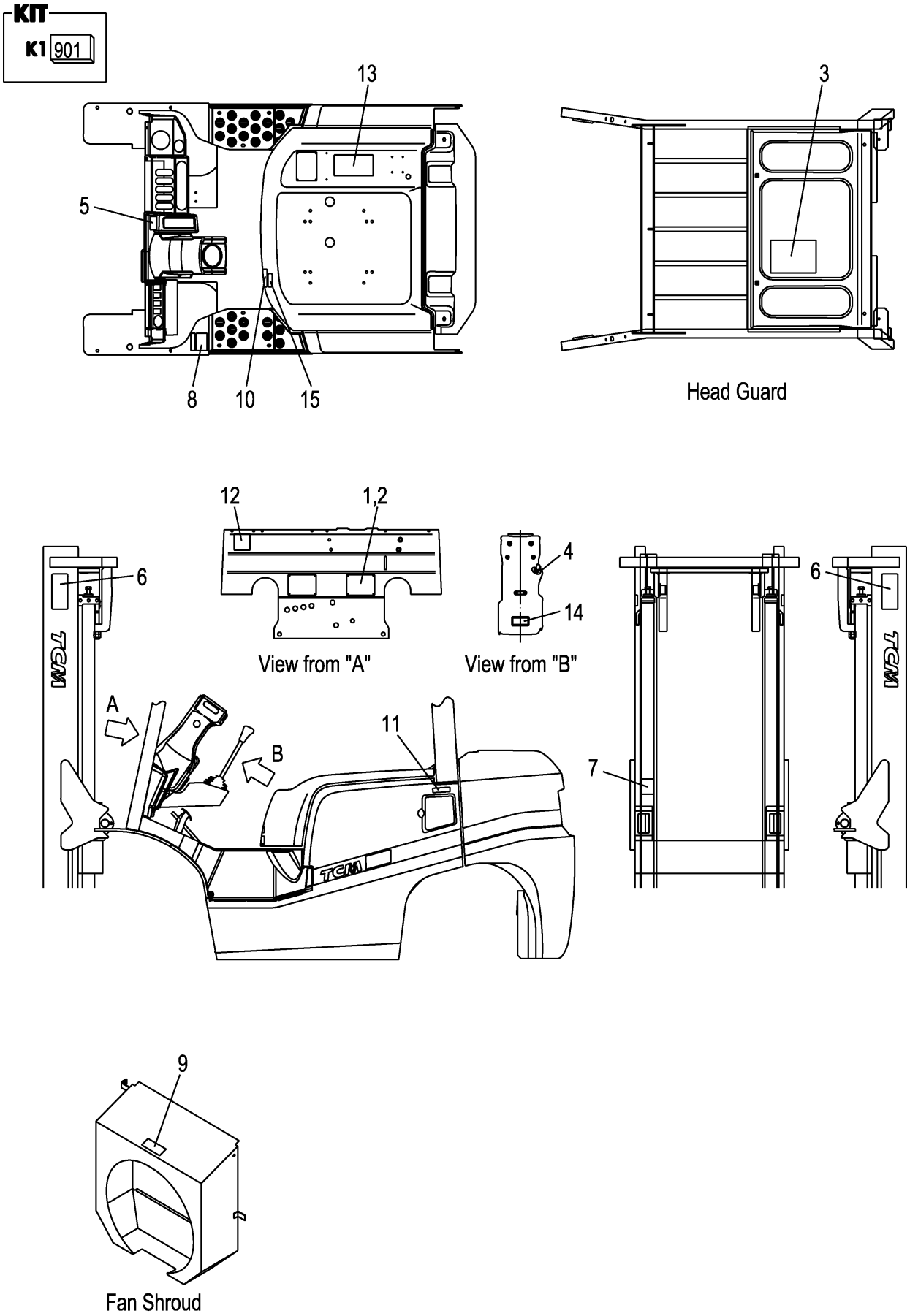

A:FD20C3Z FD20T3Z FD25C3Z FD25T3Z

Item No	Part No.	Mark	Description		Req'd	Remarks : Serial No.
901	C-11452-2N5-D	K1	KIT,DECAL,JPN	ﾃﾞｶﾙｷｯﾄ	1	INC.3-15,FIG.153:8,9
1	NO PART NO.	#	PLATE,NAME	ﾌﾟﾚｰﾄ	1	
2	216G9-12131		RIVET	ﾘﾍﾞｯﾄ	4	
3	22N59-12261	*	DECAL,LUBRICATION	ﾃﾞｶﾙ	1	
4	216G9-12071	*	DECAL,STARTER-SWITCH	ﾃﾞｶﾙ	1	
5	214A5-53012	*	DECAL,BRAKE-LEVER	ﾃﾞｶﾙ	1	
6	27419-12062	*	DECAL,MAST-CAUTION	ﾃﾞｶﾙ	2	
7	27419-12072	*	DECAL,CROSS-BEAM	ﾃﾞｶﾙ	1	
8	216G9-12062	*	DECAL,TIRE-CAUTION	ﾃﾞｶﾙ	1	
9	216G9-12052	*	DECAL,FAN-CAUTION	ﾃﾞｶﾙ	1	
10	238F9-12071	*	DECAL,FUEL-CAPACITY	ﾃﾞｶﾙ	1	
11	239A9-12501	*	DECAL,LIGHT-OIL	ﾃﾞｶﾙ	1	
12	271A9-12251	*	DECAL,CAUTION	ﾃﾞｶﾙ	1	
13	239A9-12301	*	DECAL,WARNING-PLATE	ﾃﾞｶﾙ	1	
14	26519-12281	*	DECAL,HOSE	ﾃﾞｶﾙ	1	
15	22N59-12351	*	DECAL,BONNET-CAUTION	ﾃﾞｶﾙ	1	

FIG.155 DECAL (2/2)[EXB]

(F7Z291B0) ﾃﾞｶﾙ(2/2)

KIT

K1	K2
901	902

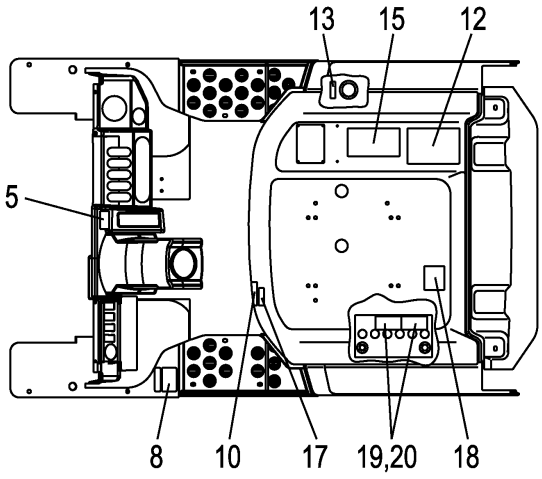

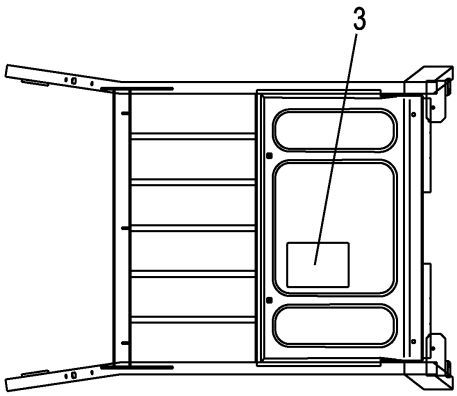

Head Guard

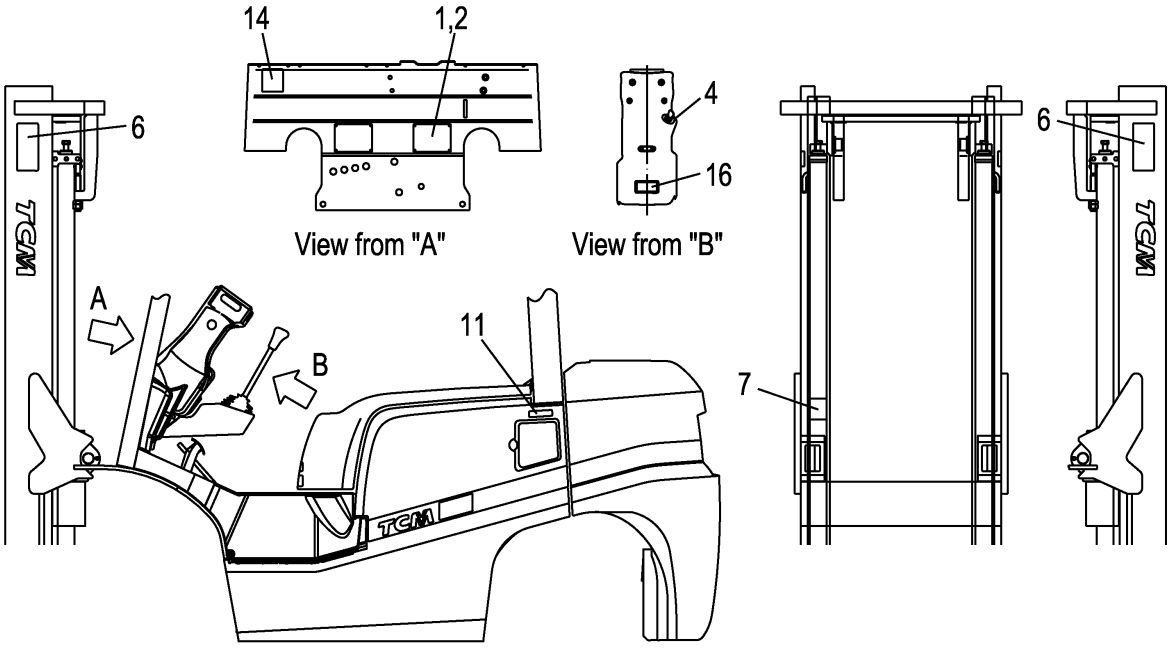

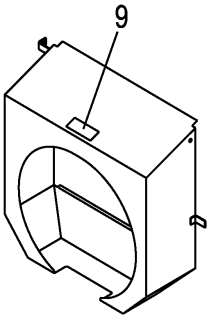

Fan Shroud

Radiator Reserve Tank

A:FD20C3Z FD20T3Z FD25C3Z FD25T3Z

Item No	Part No.	Mark	Description		Req'd	Remarks : Serial No.
901	C-11452-2N0-E	K1	KIT,DECAL,ENGLISH	ﾃﾞｶﾙｷｯﾄ	1	[EXB/ENGLISH]
						INC.3-11,14-21,FIG.153:8,9
902	C-11452-2N0-C	K2	KIT,DECAL,CHINESE	ﾃﾞｶﾙｷｯﾄ	1	[EXB/CHINESE]
						INC.3-19,21,FIG.153:8,9
1	NO PART NO.	#	PLATE,NAME	ﾌﾟﾚｰﾄ	1	[EXB/ENGLISH]
-	NO PART NO.	#	PLATE,NAME	ﾌﾟﾚｰﾄ	1	[EXB/CHINESE]
2	216G9-12131		RIVET	ﾘﾍﾞｯﾄ	4	[EXB]
3	52N52-72101	*	CHART,LUBRICATION	ﾁｬｰﾄ	1	[EXB/ENGLISH]
-	52N52-82401	*	CHART,LUBRICATION	ﾁｬｰﾄ	1	[EXB/CHINESE]
4	216G9-12071	*	DECAL,STARTER-SWITCH	ﾃﾞｶﾙ	1	[EXB]
5	514A3-82002	*	DECAL,BRAKE-LEVER	ﾃﾞｶﾙ	1	[EXB/ENGLISH]
-	514A2-82012	*	DECAL,BRAKE-LEVER	ﾃﾞｶﾙ	1	[EXB/CHINESE]
6	27419-12061	*	DECAL,MAST-CAUTION	ﾃﾞｶﾙ	2	[EXB]
7	27419-12071	*	DECAL,CROSS-BEAM	ﾃﾞｶﾙ	1	[EXB]
8	516G2-72711	*	DECAL,TIRE-CAUTION	ﾃﾞｶﾙ	1	[EXB/ENGLISH]
-	516G2-82061	*	DECAL,TIRE-CAUTION	ﾃﾞｶﾙ	1	[EXB/CHINESE]
9	516G2-72701	*	DECAL,FAN-CAUTION	ﾃﾞｶﾙ	1	[EXB/ENGLISH]
-	516G2-82051	*	DECAL,FAN-CAUTION	ﾃﾞｶﾙ	1	[EXB/CHINESE]
10	536G2-82181	*	DECAL,FUEL-CAPACITY	ﾃﾞｶﾙ	1	[EXB/ENGLISH]
-	536G2-82281	*	DECAL,FUEL-CAPACITY	ﾃﾞｶﾙ	1	[EXB/CHINESE]
11	509K3-82681	*	DECAL,LIGHT-OIL	ﾃﾞｶﾙ	1	[EXB/ENGLISH]
-	539A2-82051	*	DECAL,LIGHT-OIL	ﾃﾞｶﾙ	1	[EXB/CHINESE]
12	53652-82551	*	DECAL,CAUTION	ﾃﾞｶﾙ	1	[EXB/CHINESE]
13	53652-82541	*	DECAL,OIL	ﾃﾞｶﾙ	1	[EXB/CHINESE]
14	571A3-82361	*	DECAL,CAUTION	ﾃﾞｶﾙ	1	[EXB]
15	516G3-82801	*	DECAL,CAUTION	ﾃﾞｶﾙ	1	[EXB/ENGLISH]
-	52672-82073	*	DECAL,WARNING-PLATE	ﾃﾞｶﾙ	1	[EXB/CHINESE]
16	509K2-82251	*	DECAL,STEERING-HOSE	ﾃﾞｶﾙ	1	[EXB/ENGLISH]
-	509K3-83451	*	DECAL,STEERING-HOSE	ﾃﾞｶﾙ	1	[EXB/CHINESE]
17	52N52-72201	*	DECAL,BONNET-CAUTION	ﾃﾞｶﾙ	1	[EXB/ENGLISH]
-	52N52-82501	*	DECAL,BONNET-CAUTION	ﾃﾞｶﾙ	1	[EXB/CHINESE]
18	577H3-82151	*	DECAL,GAS-SPRING	ﾃﾞｶﾙ	1	[EXB/ENGLISH]
-	577H2-82021	*	DECAL,GAS-SPRING	ﾃﾞｶﾙ	1	[EXB/CHINESE]
19	534A3-82311	*	DECAL,BATTERY,A	ﾃﾞｶﾙ	1	[EXB/ENGLISH]
-	534A3-82531	*	DECAL,BATTERY	ﾃﾞｶﾙ	1	[EXB/CHINESE]
20	534A3-82421	*	DECAL,BATTERY,B	ﾃﾞｶﾙ	1	[EXB/ENGLISH]
21	23659-12101	*	DECAL,LIFE-COOLANT	ﾃﾞｶﾙ	1	[EXB]

FIG.156 SERVICE TOOL

(F7Z29210) サービスツール

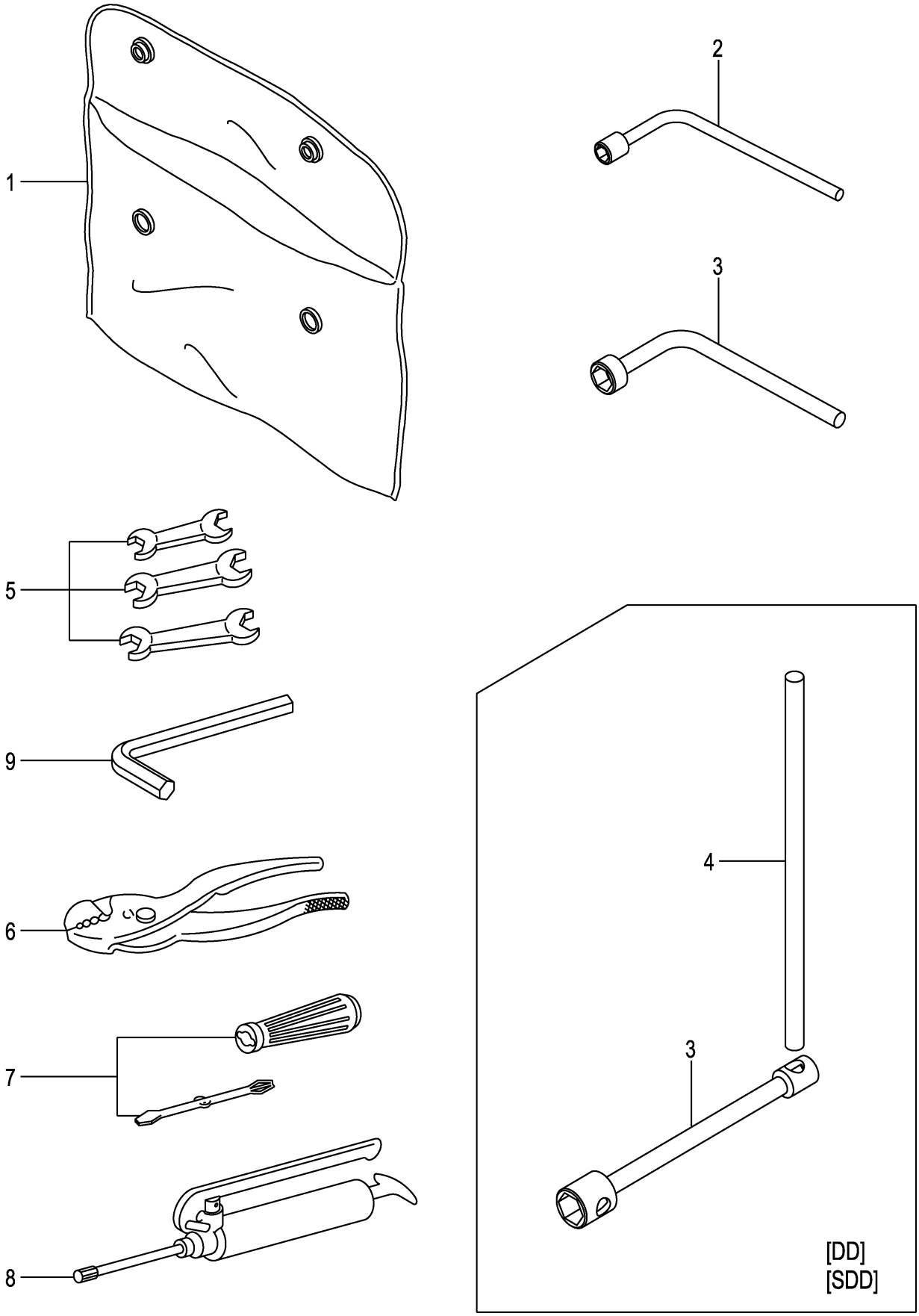

FIG.156

(F7Z29210)

A:FD20C3Z FD20T3Z FD25C3Z FD25T3Z

Item No	Part No.	Mark	Description		Req'd	Remarks : Serial No.
1	214A9-20101		SACK,SERVICE-TOOLS	ｻｯｸ	1	
2	22199-22251		WRENCH,HUB-NUT,21MM	ﾚﾝﾁ	1	(REAR)
3	25599-22001		WRENCH,HUB-NUT,32MM	ﾚﾝﾁ	1	(FRONT)
-	23819-20011		WRENCH,HUB-NUT,41MM	ﾚﾝﾁ	1	[DD][SDD](FRONT)
4	23819-20021		LEVER,WRENCH,HUB-NUT	ﾚﾊﾞｰ	1	[DD][SDD]
5	25599-22051		SET,SPANNER	ｽﾊﾟﾅｾｯﾄ	1	
6	23019-20011		PLIER,150MM	ﾌﾟﾗｲﾔ	1	
7	22199-22261		SET,DRIVER	ﾄﾞﾗｲﾊﾞｾｯﾄ	1	
8	22199-22001		GUN,GREASE	ｶﾞﾝ	1	
9	25599-22061		WRENCH,HEXAGON	ﾚﾝﾁ	1	

FIG.157 FORK [VM2N5]

(M7028110) フォーク

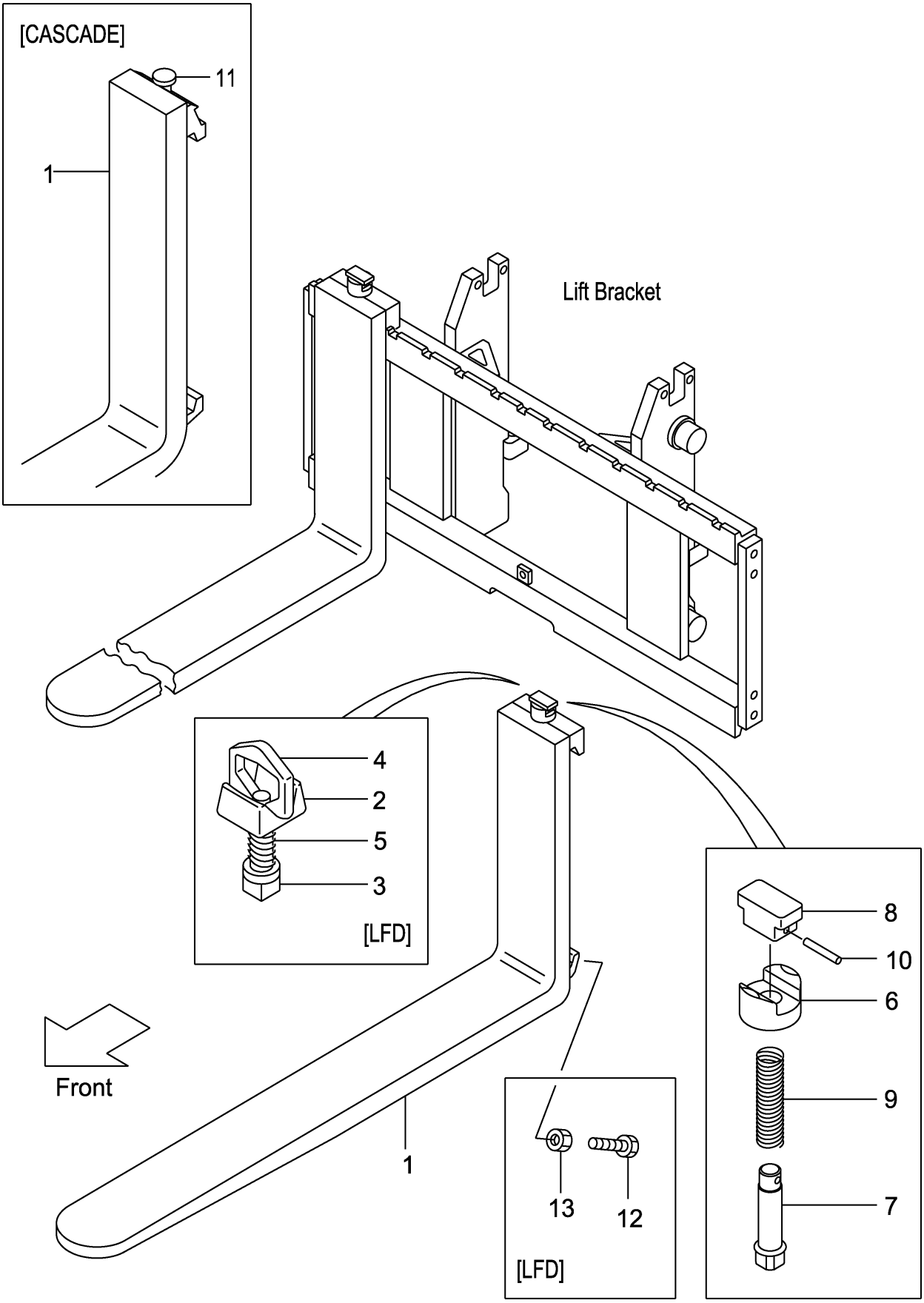

A:VM2N5(2T)
B:VM2N5(2.5T)

Item No	Part No.	Mark	Description		Req'd	Remarks : Serial No.
1	231A8-10101		FORK	ﾌｫｰｸ	2	A (L=920) INC.6-10
-	214A8-10512		FORK	ﾌｫｰｸ	2	B (L=1070) INC.6-10
-	231A8-10171		FORK	ﾌｫｰｸ	2	A [LF090] INC.6-10
-	231F8-10571		FORK	ﾌｫｰｸ	2	B [LF090] INC.6-10
-	231A8-10101		FORK	ﾌｫｰｸ	2	A [LF092] INC.6-10
-	231F8-10501		FORK	ﾌｫｰｸ	2	B [LF092] INC.6-10
-	214A8-10582		FORK	ﾌｫｰｸ	2	[LF100] INC.6-10
-	214A8-10512		FORK	ﾌｫｰｸ	2	[LF107][EX] INC.6-10
-	214A8-10592		FORK	ﾌｫｰｸ	2	[LF110] INC.6-10
-	214A8-10602		FORK	ﾌｫｰｸ	2	[LF120] INC.6-10
-	214A8-10522		FORK	ﾌｫｰｸ	2	[LF122] INC.6-10
-	214A8-10612		FORK	ﾌｫｰｸ	2	[LF130] INC.6-10
-	214A8-10532		FORK	ﾌｫｰｸ	2	[LF137] INC.6-10
-	214A8-10622		FORK	ﾌｫｰｸ	2	[LF140] INC.6-10
-	214A8-10632		FORK	ﾌｫｰｸ	2	[LF150] INC.6-10
-	214A8-10542		FORK	ﾌｫｰｸ	2	[LF152] INC.6-10
-	214A8-10642		FORK	ﾌｫｰｸ	2	[LF160] INC.6-10
-	214A8-10552		FORK	ﾌｫｰｸ	2	[LF167] INC.6-10
-	214A8-10653		FORK	ﾌｫｰｸ	2	[LF170] INC.6-10
-	214A8-10663		FORK	ﾌｫｰｸ	2	[LF180] INC.6-10
-	214A8-10563		FORK	ﾌｫｰｸ	2	[LF182] INC.6-10
-	214A8-10673		FORK	ﾌｫｰｸ	2	[LF190] INC.6-10
-	214A8-10683		FORK	ﾌｫｰｸ	2	[LF200] INC.6-10
-	234A8-10571		FORK	ﾌｫｰｸ	2	[LFD090] INC.2-5
-	234A8-10501		FORK	ﾌｫｰｸ	2	[LFD092] INC.2-5
-	234A8-10581		FORK	ﾌｫｰｸ	2	[LFD100] INC.2-5
-	234A8-10511		FORK	ﾌｫｰｸ	2	[LFD107] INC.2-5
-	234A8-10591		FORK	ﾌｫｰｸ	2	[LFD110] INC.2-5
-	234A8-10601		FORK	ﾌｫｰｸ	2	[LFD120] INC.2-5
-	234A8-10521		FORK	ﾌｫｰｸ	2	[LFD122] INC.2-5
-	234A8-10611		FORK	ﾌｫｰｸ	2	[LFD130] INC.2-5
-	234A8-10531		FORK	ﾌｫｰｸ	2	[LFD137] INC.2-5
-	234A8-10621		FORK	ﾌｫｰｸ	2	[LFD140] INC.2-5
-	234A8-10631		FORK	ﾌｫｰｸ	2	[LFD150] INC.2-5
-	234A8-10541		FORK	ﾌｫｰｸ	2	[LFD152] INC.2-5
-	234A8-10641		FORK	ﾌｫｰｸ	2	[LFD160] INC.2-5
-	234A8-10551		FORK	ﾌｫｰｸ	2	[LFD167] INC.2-5
-	234A8-10652		FORK	ﾌｫｰｸ	2	[LFD170] INC.2-5
-	234A8-10662		FORK	ﾌｫｰｸ	2	[LFD180] INC.2-5
-	234A8-10562		FORK	ﾌｫｰｸ	2	[LFD182] INC.2-5
-	234A8-10672		FORK	ﾌｫｰｸ	2	[LFD190] INC.2-5
-	234A8-10682		FORK	ﾌｫｰｸ	2	[LFD200] INC.2-5
-	22N58-10501		FORK	ﾌｫｰｸ	2	[LF092/CASCADE] INC.11
-	22N58-10511		FORK	ﾌｫｰｸ	2	[LF107/CASCADE] INC.11

FIG.157 FORK [VM2N5]

(M7028110) フォーク

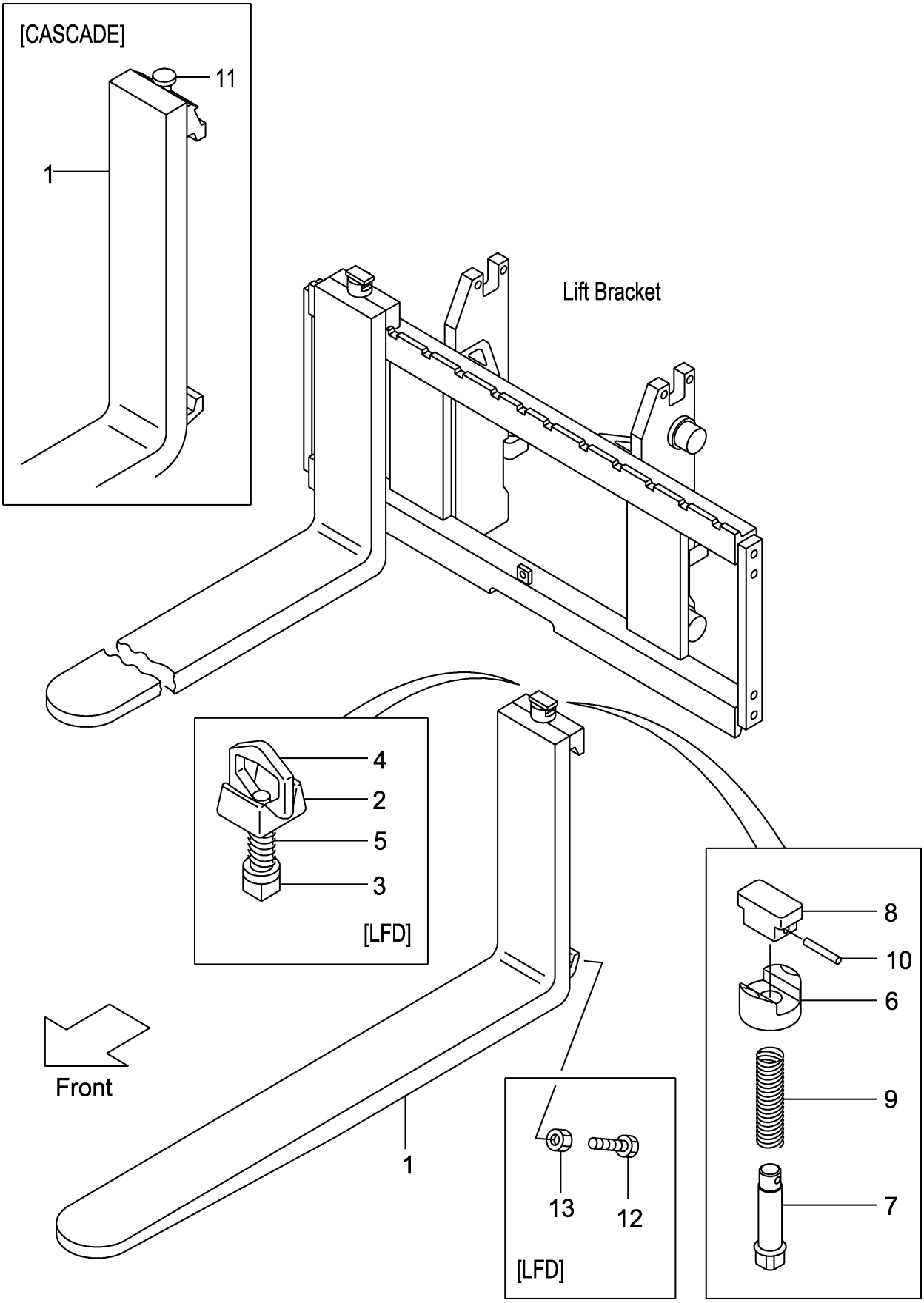

A:VM2N5(2T)
B:VM2N5(2.5T)

Item No	Part No.	Mark	Description		Req'd	Remarks : Serial No.
-	22N58-10521		FORK	ﾌｫｰｸ	2	[LF122/CASCADE] INC.11
A1	214A8-11001		STOPPER-ASSY,FORK	ﾌｫｰｸｽﾄｯﾊﾟｱｯｾﾝ	2	[LFD] INC.2-5
2	214A8-12001		HEAD	ﾍｯﾄﾞ	2	[LFD]
3	214A8-12011		STOPPER	ｽﾄｯﾊﾟ	2	[LFD]
4	214A8-12021		HANDLE	ﾊﾝﾄﾞﾙ	2	[LFD]
5	214A8-12031		SPRING	ｽﾌﾟﾘﾝｸﾞ	2	[LFD]
6	216G8-12921		HOLDER	ﾎﾙﾀﾞ	2	[LF]
7	231A8-12001		PIN	ﾋﾟﾝ	2	[LF]
8	231A8-12011		KNOB	ﾉﾌﾞ	2	[LF]
9	231A8-12021		SPRING	ｽﾌﾟﾘﾝｸﾞ	2	[LF]
10	231A8-12031		PIN,SPRING	ﾋﾟﾝ	2	[LF]
11	W-K2PK-M		KIT,PIN,STOPPER	ｽｯﾄﾊﾟﾋﾟﾝｷｯﾄ	2	[CASCADE]
12	216G8-12101		BOLT	ﾎﾞﾙﾄ	4	[LFD]
13	01402-00010		NUT	ﾅｯﾄ	4	[LFD]

M E M O

M E M O

FIG.158 LIFT BRACKET [VM2N5]

(M7028210) ﾘﾌﾄﾌﾞﾗｹｯﾄ

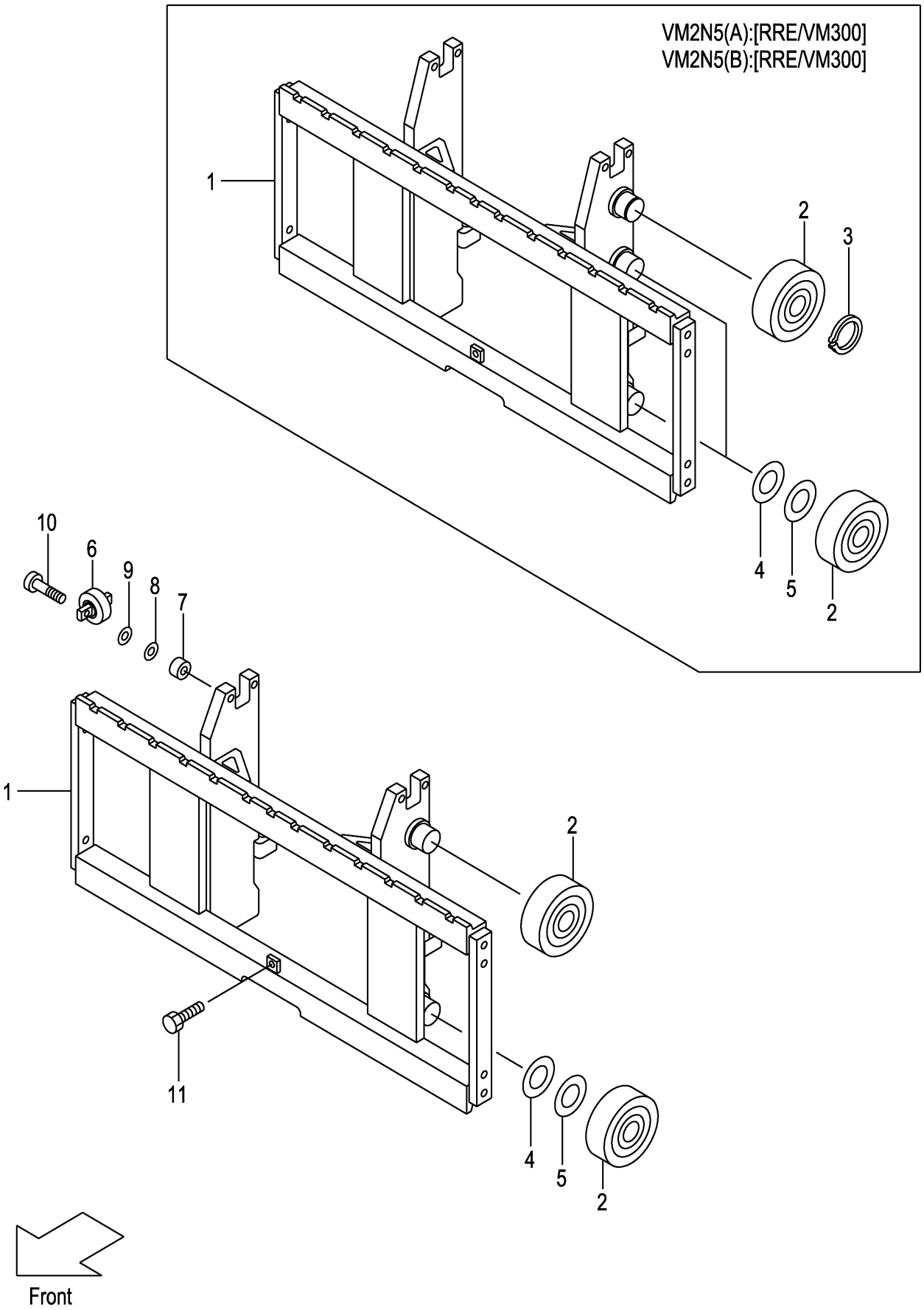

A:VM2N5(2T)
B:VM2N5(2.5T)

Item No	Part No.	Mark	Description		Req'd	Remarks : Serial No.
1	22N58-20201		BRACKET,LIFT	ﾌﾞﾗｹｯﾄ	1	
-	22N58-20201		BRACKET,LIFT	ﾌﾞﾗｹｯﾄ	1	[RRE/VM200-VM275]
-	22N58-20701		BRACKET,LIFT	ﾌﾞﾗｹｯﾄ	1	[RRE/VM300]
2	277P8-22051		ROLLER,END,119.0	ﾛｰﾗ	4	
-	277P8-22051		ROLLER,END,119.0	ﾛｰﾗ	6	[RRE/VM300]
-	277P8-22061		ROLLER,END,119.5	ﾛｰﾗ	(4)	
-	277P8-22061		ROLLER,END,119.5	ﾛｰﾗ	(6)	[RRE/VM300]
3	02100-00045		RING,SNAP	ｽﾅｯﾌﾟﾘﾝｸﾞ	2	[RRE/VM300]
4	277P8-22071		SHIM,T-0.5	ｼﾑ	5	
5	277P8-22081		SHIM,T-1.0	ｼﾑ	5	
6	22N58-32701		ROLLER,SIDE	ﾛｰﾗ	2	
-	23458-32052		ROLLER,SIDE	ﾛｰﾗ	2	[RRE/VM300]
7	22N58-32711		SPACER	ｽﾍﾟｰｻ	4	
-	22548-34031		SPACER	ｽﾍﾟｰｻ	4	[RRE/VM300]
8	22018-30261		SHIM	ｼﾑ	2	
-	22548-34051		SHIM,T-0.5	ｼﾑ	5	[RRE/VM300]
9	22018-30121		SHIM	ｼﾑ	2	
-	22548-34061		SHIM,T-1.0	ｼﾑ	5	[RRE/VM300]
10	01103-10045		BOLT	ﾎﾞﾙﾄ	4	
-	01184-12050		BOLT & WASHER	ﾎﾞﾙﾄ & ﾜｯｼｬ	4	[RRE/VM300]
11	01184-12025		BOLT	ﾎﾞﾙﾄ	1	

FIG.159 BACKREST [VM2N5]

(M7028220) ﾊﾞｯｸﾚｽﾄ

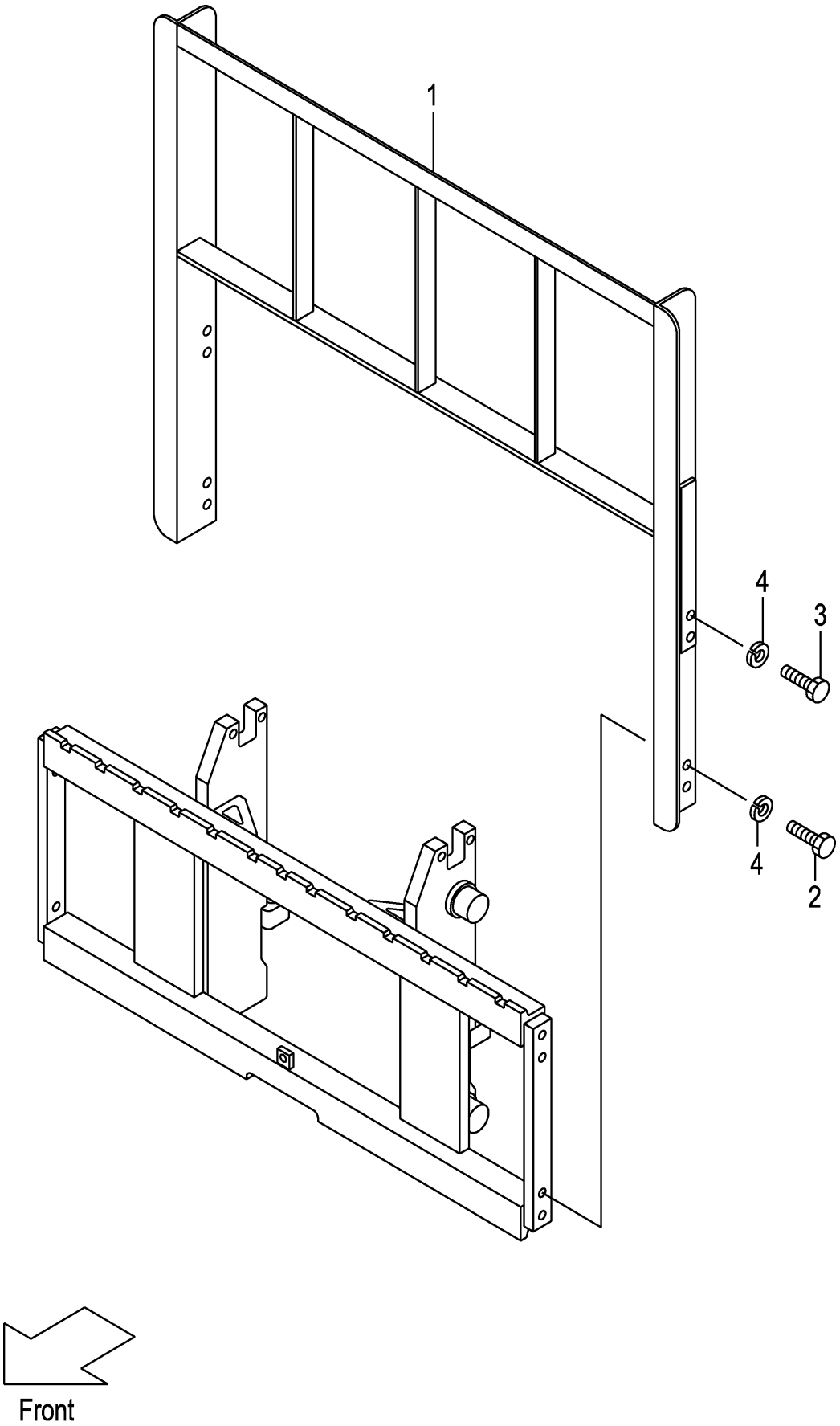

A:VM2N5(2T)
B:VM2N5(2.5T)

Item No	Part No.	Mark	Description		Req'd	Remarks : Serial No.
1	234A8-22202		BACKREST	ﾊﾞｯｸﾚｽﾄ	1	
2	01100-14025		BOLT	ﾎﾞﾙﾄ	4	
3	01100-14030		BOLT	ﾎﾞﾙﾄ	4	
4	02010-00014		WASHER	ﾜｯｼｬ	8	

FIG.160 MAST [VM2N5]

(M7028310) マスト

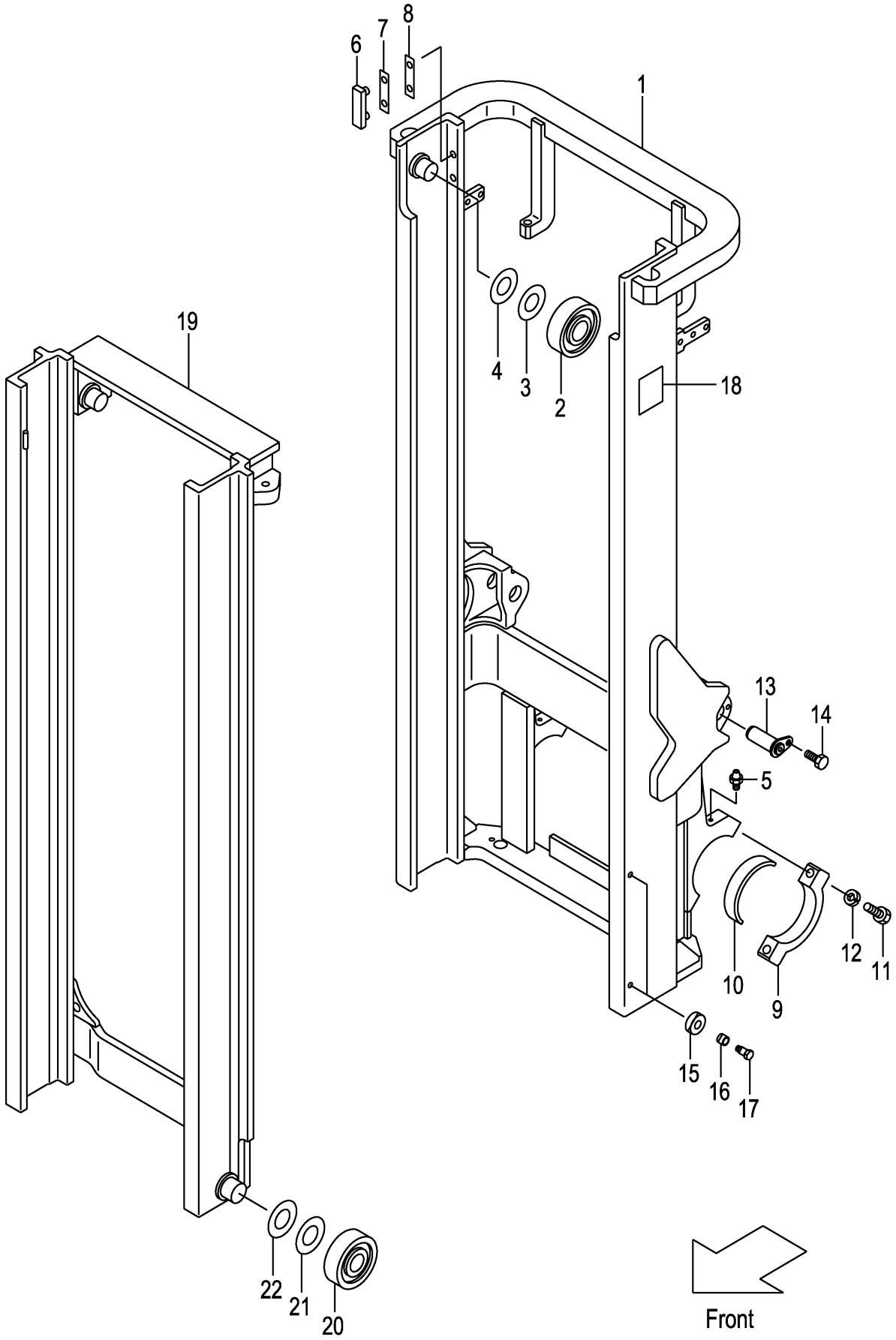

A:VM2N5(2T)
B:VM2N5(2.5T)

Item No	Part No.	Mark	Description		Req'd	Remarks : Serial No.
1	22N58-30211		MAST,OUTER VM200	ｱｳﾀﾏｽﾄ	1	
-	22N58-30221		MAST,OUTER VM225	ｱｳﾀﾏｽﾄ	1	
-	22N58-30231		MAST,OUTER VM250	ｱｳﾀﾏｽﾄ	1	
-	22N58-30241		MAST,OUTER VM270	ｱｳﾀﾏｽﾄ	1	
-	22N58-30251		MAST,OUTER VM275	ｱｳﾀﾏｽﾄ	1	
-	22N58-30201		MAST,OUTER VM300	ｱｳﾀﾏｽﾄ	1	
-	22N58-30261		MAST,OUTER VM325	ｱｳﾀﾏｽﾄ	1	
-	22N58-30271		MAST,OUTER VM330	ｱｳﾀﾏｽﾄ	1	
-	22N58-30281		MAST,OUTER VM350	ｱｳﾀﾏｽﾄ	1	
-	22N58-30291		MAST,OUTER VM366	ｱｳﾀﾏｽﾄ	1	
-	22N58-30301		MAST,OUTER VM370	ｱｳﾀﾏｽﾄ	1	
-	22N58-30311		MAST,OUTER VM375	ｱｳﾀﾏｽﾄ	1	
-	22N58-30321		MAST,OUTER VM400	ｱｳﾀﾏｽﾄ	1	
-	22N58-30331		MAST,OUTER VM425	ｱｳﾀﾏｽﾄ	1	
-	22N58-30341		MAST,OUTER VM450	ｱｳﾀﾏｽﾄ	1	
-	22N58-30351		MAST,OUTER VM475	ｱｳﾀﾏｽﾄ	1	
-	22N58-30361		MAST,OUTER VM500	ｱｳﾀﾏｽﾄ	1	
-	22N58-30371		MAST,OUTER VM550	ｱｳﾀﾏｽﾄ	1	
-	22N58-30381		MAST,OUTER VM600	ｱｳﾀﾏｽﾄ	1	
-	22N58-30211		MAST,OUTER VM200	ｱｳﾀﾏｽﾄ	1	[RRE]
-	22N58-30221		MAST,OUTER VM225	ｱｳﾀﾏｽﾄ	1	[RRE]
-	22N58-30231		MAST,OUTER VM250	ｱｳﾀﾏｽﾄ	1	[RRE]
-	22N58-30241		MAST,OUTER VM270	ｱｳﾀﾏｽﾄ	1	[RRE]
-	22N58-30251		MAST,OUTER VM275	ｱｳﾀﾏｽﾄ	1	[RRE]
-	22N58-30391		MAST,OUTER VM300	ｱｳﾀﾏｽﾄ	1	[RRE]
2	277P8-22051		ROLLER,END,119.0	ﾛｰﾗ	2	
3	277P8-22071		SHIM,T-0.5	ｼﾑ	12	
4	277P8-22081		SHIM,T-1.0	ｼﾑ	12	
5	04901-00100		FITTING	ﾌｨｯﾃｨﾝｸﾞ	2	
6	216G8-33401		SLIPPER	ｽﾘｯﾊﾟ	2	
7	216G8-33361		SHIM,T-0.5	ｼﾑ	8	
8	216G8-33371		SHIM,T-1.0	ｼﾑ	4	
9	277P8-32701		CAP	ｷｬｯﾌﾟ	2	
10	214A8-02201		BUSHING	ﾌﾞｯｼﾝｸﾞ	2	
11	01103-16065		BOLT	ﾎﾞﾙﾄ	4	
12	02011-00016		WASHER	ﾜｯｼｬ	4	
13	272K8-52201		PIN	ﾋﾟﾝ	2	
14	216G8-52301		BOLT & WASHER	ﾎﾞﾙﾄ & ﾜｯｼｬ	2	
15	22N58-34501		RUBBER	ﾗﾊﾞｰ	4	
16	22N58-34601		COLLAR	ｶﾗ-	4	
17	214A0-82831		BOLT	ﾎﾞﾙﾄ	4	
18	23678-06002		PLATE,NAME	ﾌﾟﾚｰﾄ	1	
19	22N58-30411		MAST,INNER VM200	ｲﾝﾅﾏｽﾄ	1	
-	22N58-30421		MAST,INNER VM225	ｲﾝﾅﾏｽﾄ	1	
-	22N58-30431		MAST,INNER VM250	ｲﾝﾅﾏｽﾄ	1	
-	22N58-30441		MAST,INNER VM270	ｲﾝﾅﾏｽﾄ	1	
-	22N58-30451		MAST,INNER VM275	ｲﾝﾅﾏｽﾄ	1	
-	22N58-30401		MAST,INNER VM300	ｲﾝﾅﾏｽﾄ	1	
-	22N58-30461		MAST,INNER VM325	ｲﾝﾅﾏｽﾄ	1	
-	22N58-30471		MAST,INNER VM330	ｲﾝﾅﾏｽﾄ	1	

FIG.160 MAST [VM2N5]

(M7028310) マスト

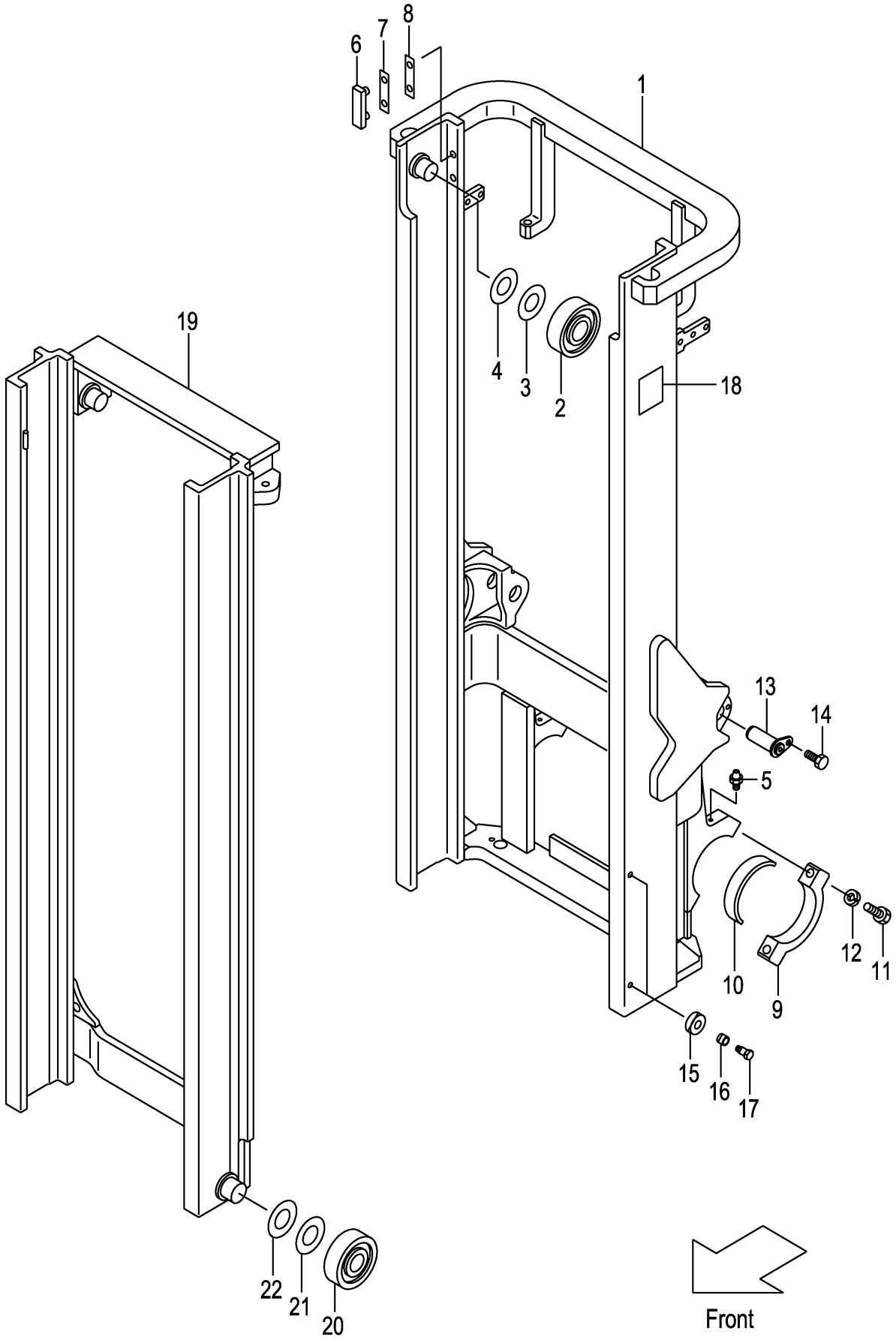

A:VM2N5(2T)
B:VM2N5(2.5T)

Item No	Part No.	Mark	Description		Req'd	Remarks : Serial No.
-	22N58-30481		MAST,INNER VM350	ｲﾝﾅﾏｽﾄ	1	
-	22N58-30491		MAST,INNER VM366	ｲﾝﾅﾏｽﾄ	1	
-	22N58-30501		MAST,INNER VM370	ｲﾝﾅﾏｽﾄ	1	
-	22N58-30511		MAST,INNER VM375	ｲﾝﾅﾏｽﾄ	1	
-	22N58-30521		MAST,INNER VM400	ｲﾝﾅﾏｽﾄ	1	
-	22N58-30531		MAST,INNER VM425	ｲﾝﾅﾏｽﾄ	1	
-	22N58-30541		MAST,INNER VM450	ｲﾝﾅﾏｽﾄ	1	
-	22N58-30551		MAST,INNER VM475	ｲﾝﾅﾏｽﾄ	1	
-	22N58-30561		MAST,INNER VM500	ｲﾝﾅﾏｽﾄ	1	
-	22N58-30571		MAST,INNER VM550	ｲﾝﾅﾏｽﾄ	1	
-	22N58-30581		MAST,INNER VM600	ｲﾝﾅﾏｽﾄ	1	
-	22N58-30411		MAST,INNER VM200	ｲﾝﾅﾏｽﾄ	1	[RRE]
-	22N58-30421		MAST,INNER VM225	ｲﾝﾅﾏｽﾄ	1	[RRE]
-	22N58-30431		MAST,INNER VM250	ｲﾝﾅﾏｽﾄ	1	[RRE]
-	22N58-30441		MAST,INNER VM270	ｲﾝﾅﾏｽﾄ	1	[RRE]
-	22N58-30451		MAST,INNER VM275	ｲﾝﾅﾏｽﾄ	1	[RRE]
-	22N58-30591		MAST,INNER VM300	ｲﾝﾅﾏｽﾄ	1	[RRE]
20	277P8-22051		ROLLER,END,119.0	ﾛｰﾗ	2	
-	277P8-22061		ROLLER,END,119.5	ﾛｰﾗ	(2)	
21	277P8-22071		SHIM,T-0.5	ｼﾑ	12	
22	277P8-22081		SHIM,T-1.0	ｼﾑ	12	

M E M O

M E M O

FIG.161 LIFT CYLINDER [VM2N5]

(M7028410) ﾘﾌﾄｼﾘﾝﾀﾞ

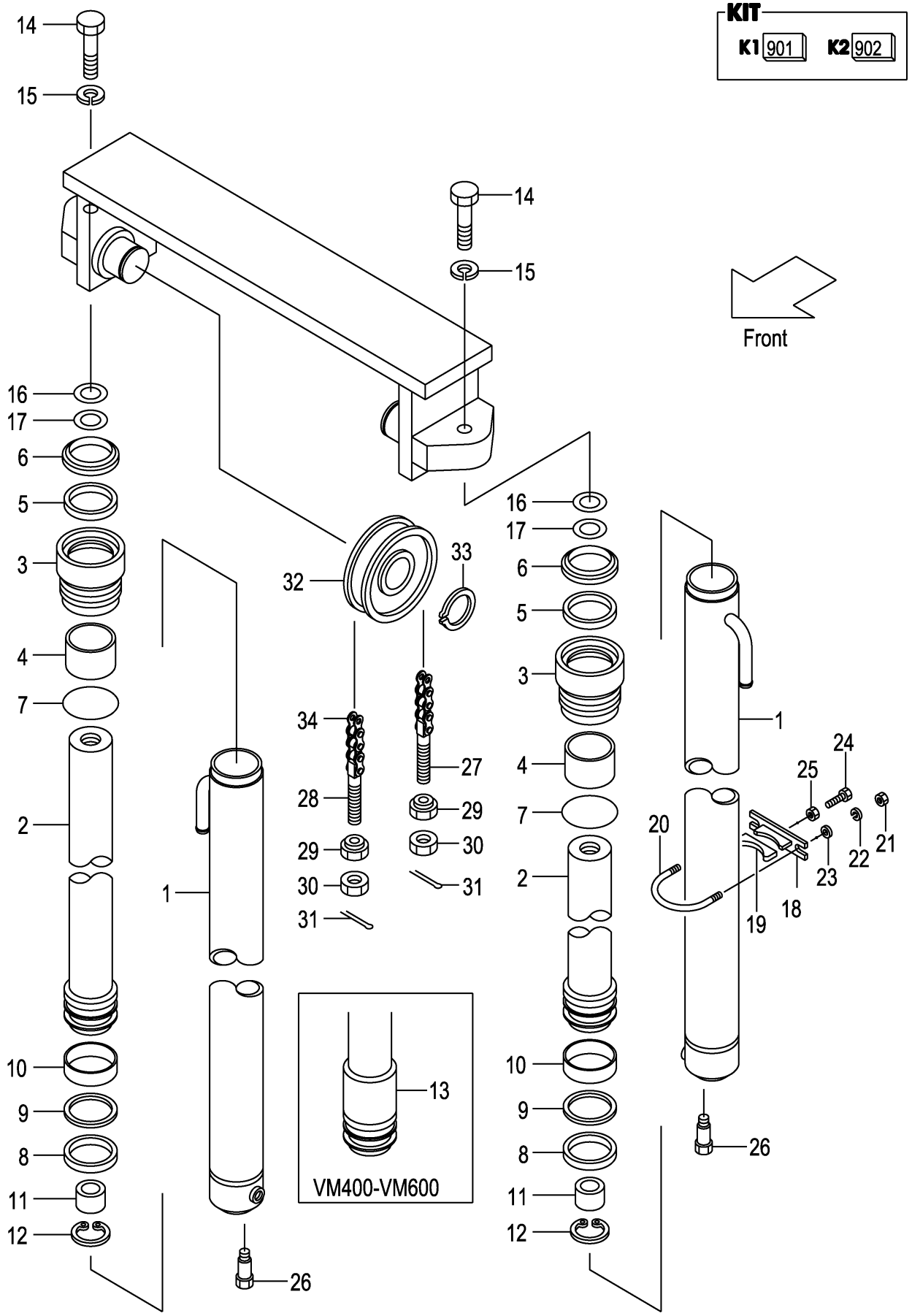

A:VM2N5(2T)
B:VM2N5(2.5T)

Item No	Part No.	Mark	Description		Req'd	Remarks : Serial No.
A1	22N58-40211		CYL-ASSY,LIFT VM200	ﾘﾌﾄｼﾘﾝﾀﾞｱｯｾﾝ	2	INC.1-12
-	22N58-40221		CYL-ASSY,LIFT VM225	ﾘﾌﾄｼﾘﾝﾀﾞｱｯｾﾝ	2	INC.1-12
-	22N58-40231		CYL-ASSY,LIFT VM250	ﾘﾌﾄｼﾘﾝﾀﾞｱｯｾﾝ	2	INC.1-12
-	22N58-40241		CYL-ASSY,LIFT VM270	ﾘﾌﾄｼﾘﾝﾀﾞｱｯｾﾝ	2	INC.1-12
-	22N58-40251		CYL-ASSY,LIFT VM275	ﾘﾌﾄｼﾘﾝﾀﾞｱｯｾﾝ	2	INC.1-12
-	22N58-40201		CYL-ASSY,LIFT VM300	ﾘﾌﾄｼﾘﾝﾀﾞｱｯｾﾝ	2	INC.1-12
-	22N58-40261		CYL-ASSY,LIFT VM325	ﾘﾌﾄｼﾘﾝﾀﾞｱｯｾﾝ	2	INC.1-12
-	22N58-40271		CYL-ASSY,LIFT VM330	ﾘﾌﾄｼﾘﾝﾀﾞｱｯｾﾝ	2	INC.1-12
-	22N58-40281		CYL-ASSY,LIFT VM350	ﾘﾌﾄｼﾘﾝﾀﾞｱｯｾﾝ	2	INC.1-12
-	22N58-40291		CYL-ASSY,LIFT VM366	ﾘﾌﾄｼﾘﾝﾀﾞｱｯｾﾝ	2	INC.1-12
-	22N58-40301		CYL-ASSY,LIFT VM370	ﾘﾌﾄｼﾘﾝﾀﾞｱｯｾﾝ	2	INC.1-12
-	22N58-40311		CYL-ASSY,LIFT VM375	ﾘﾌﾄｼﾘﾝﾀﾞｱｯｾﾝ	2	INC.1-12
-	22N58-40321		CYL-ASSY,LIFT VM400	ﾘﾌﾄｼﾘﾝﾀﾞｱｯｾﾝ	2	INC.1-13
-	22N58-40331		CYL-ASSY,LIFT VM425	ﾘﾌﾄｼﾘﾝﾀﾞｱｯｾﾝ	2	INC.1-13
-	22N58-40341		CYL-ASSY,LIFT VM450	ﾘﾌﾄｼﾘﾝﾀﾞｱｯｾﾝ	2	INC.1-13
-	22N58-40351		CYL-ASSY,LIFT VM475	ﾘﾌﾄｼﾘﾝﾀﾞｱｯｾﾝ	2	INC.1-13
-	22N58-40361		CYL-ASSY,LIFT VM500	ﾘﾌﾄｼﾘﾝﾀﾞｱｯｾﾝ	2	INC.1-13
-	22N58-40371		CYL-ASSY,LIFT VM550	ﾘﾌﾄｼﾘﾝﾀﾞｱｯｾﾝ	2	INC.1-13
-	22N58-40381		CYL-ASSY,LIFT VM600	ﾘﾌﾄｼﾘﾝﾀﾞｱｯｾﾝ	2	INC.1-13
901	B-3050B-00119	K1	KIT,CAP	ｷｬｯﾌﾟｷｯﾄ	2	INC.3,4
902	B-3050A-00093	K2	KIT,REPAIR	ﾘﾍﾟｱｷｯﾄ	2	INC.5-9
1	B-6567-08101		BODY,CYL VM200	ﾎﾞﾃﾞｨ	2	
-	B-6567-08201		BODY,CYL VM225	ﾎﾞﾃﾞｨ	2	
-	B-6567-08301		BODY,CYL VM250	ﾎﾞﾃﾞｨ	2	
-	B-6567-08401		BODY,CYL VM270	ﾎﾞﾃﾞｨ	2	
-	B-6567-08501		BODY,CYL VM275	ﾎﾞﾃﾞｨ	2	
-	B-6567-08601		BODY,CYL VM300	ﾎﾞﾃﾞｨ	2	
-	B-6567-08701		BODY,CYL VM325	ﾎﾞﾃﾞｨ	2	
-	B-6567-08801		BODY,CYL VM330	ﾎﾞﾃﾞｨ	2	
-	B-6567-08901		BODY,CYL VM350	ﾎﾞﾃﾞｨ	2	
-	B-6567-09001		BODY,CYL VM366	ﾎﾞﾃﾞｨ	2	
-	B-6567-09101		BODY,CYL VM370	ﾎﾞﾃﾞｨ	2	
-	B-6567-09201		BODY,CYL VM375	ﾎﾞﾃﾞｨ	2	
-	B-6567-09301		BODY,CYL VM400	ﾎﾞﾃﾞｨ	2	
-	B-6567-09401		BODY,CYL VM425	ﾎﾞﾃﾞｨ	2	
-	B-6567-09501		BODY,CYL VM450	ﾎﾞﾃﾞｨ	2	
-	B-6567-09601		BODY,CYL VM475	ﾎﾞﾃﾞｨ	2	
-	B-6567-09701		BODY,CYL VM500	ﾎﾞﾃﾞｨ	2	
-	B-6567-09801		BODY,CYL VM550	ﾎﾞﾃﾞｨ	2	
-	B-6567-09901		BODY,CYL VM600	ﾎﾞﾃﾞｨ	2	
2	B-6567-08102		ROD,PISTON VM200	ﾛｯﾄﾞ	2	
-	B-6567-08202		ROD,PISTON VM225	ﾛｯﾄﾞ	2	
-	B-6567-08302		ROD,PISTON VM250	ﾛｯﾄﾞ	2	
-	B-6567-08402		ROD,PISTON VM270	ﾛｯﾄﾞ	2	
-	B-6567-08502		ROD,PISTON VM275	ﾛｯﾄﾞ	2	
-	B-6567-08602		ROD,PISTON VM300	ﾛｯﾄﾞ	2	
-	B-6567-08702		ROD,PISTON VM325	ﾛｯﾄﾞ	2	
-	B-6567-08802		ROD,PISTON VM330	ﾛｯﾄﾞ	2	
-	B-6567-08902		ROD,PISTON VM350	ﾛｯﾄﾞ	2	
-	B-6567-09002		ROD,PISTON VM366	ﾛｯﾄﾞ	2	

FIG.161 LIFT CYLINDER [VM2N5]

(M7028410) ﾘﾌﾄｼﾘﾝﾀﾞ

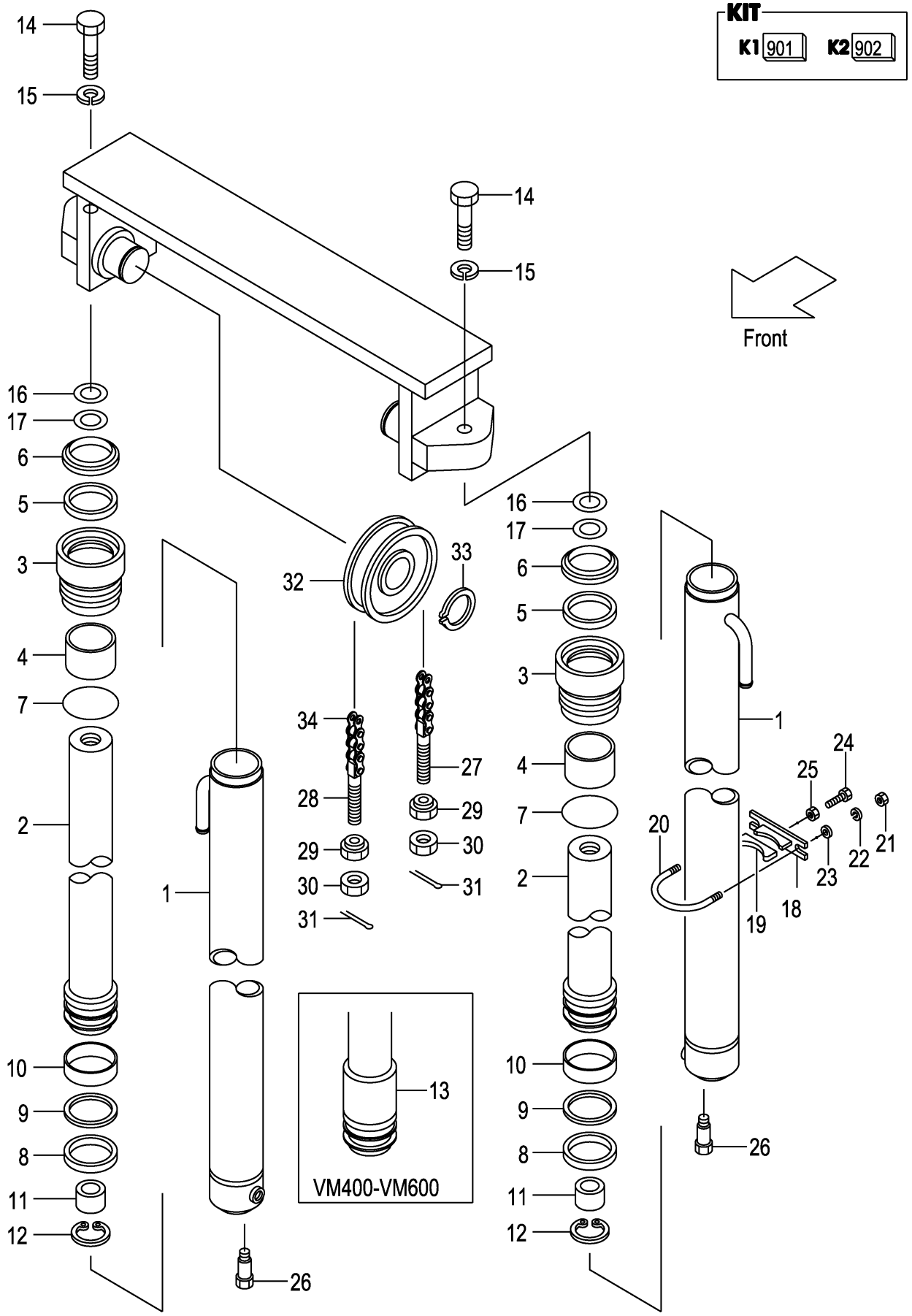

A:VM2N5(2T)
B:VM2N5(2.5T)

Item No	Part No.	Mark	Description		Req'd	Remarks : Serial No.
-	B-6567-09102		ROD,PISTON VM370	ﾛｯﾄﾞ	2	
-	B-6567-09202		ROD,PISTON VM375	ﾛｯﾄﾞ	2	
-	B-6567-09302		ROD,PISTON VM400	ﾛｯﾄﾞ	2	
-	B-6567-09402		ROD,PISTON VM425	ﾛｯﾄﾞ	2	
-	B-6567-09502		ROD,PISTON VM450	ﾛｯﾄﾞ	2	
-	B-6567-09602		ROD,PISTON VM475	ﾛｯﾄﾞ	2	
-	B-6567-09702		ROD,PISTON VM500	ﾛｯﾄﾞ	2	
-	B-6567-09802		ROD,PISTON VM550	ﾛｯﾄﾞ	2	
-	B-6567-09902		ROD,PISTON VM600	ﾛｯﾄﾞ	2	
3	B-30121-50102	*	CAP	ｷｬｯﾌﾟ	2	
4	B-30131-40017	*	BUSHING	ﾌﾞｯｼﾝｸﾞ	2	
5	B-30961-04012	*	U-RING	Uﾘﾝｸﾞ	2	
6	B-30191-40025	*	RING,WIPER	ﾘﾝｸﾞ	2	
7	B-30161-91774	*	O-RING	Oﾘﾝｸﾞ	2	
8	B-30161-50046	*	U-RING	Uﾘﾝｸﾞ	2	
9	B-30461-50039	*	RING,BACK-UP	ﾘﾝｸﾞ	2	
10	B-30131-50018		BUSHING	ﾌﾞｯｼﾝｸﾞ	2	
11	B-B6551-91008		RING	ﾘﾝｸﾞ	2	
12	B-30141-91049		RING,SNAP	ｽﾅｯﾌﾟﾘﾝｸﾞ	2	
13	B-6111-40022		SPACER	ｽﾍﾟｰｻ	2	(VM400-500)
-	B-6111-40024		SPACER	ｽﾍﾟｰｻ	2	(VM550,600)
14	01103-14040		BOLT	ﾎﾞﾙﾄ	2	
15	02011-00014		WASHER	ﾜｯｼｬ	2	
16	22517-40051		SHIM,T-0.2	ｼﾑ	4	
17	22717-40081		SHIM,T-0.5	ｼﾑ	4	
A2	225N8-43021		SUPPORT-ASSY	ｻﾎﾟｰﾄｱｯｾﾝ	2	(VM550,600) INC.18,19
18	22N58-43011		SUPPORT	ｻﾎﾟｰﾄ	2	(VM200-500)
-	22N58-43011		SUPPORT	ｻﾎﾟｰﾄ	4	(VM550,600)
19	24868-42111		RUBBER	ﾗﾊﾞｰ	2	(VM550,600)
20	234A8-42551		U-BOLT	Uﾎﾞﾙﾄ	2	(VM200-500)
-	234A8-42551		U-BOLT	Uﾎﾞﾙﾄ	4	(VM550,600)
21	01400-00010		NUT	ﾅｯﾄ	4	(VM200-500)
-	01400-00010		NUT	ﾅｯﾄ	8	(VM550,600)
22	02010-20010		WASHER	ﾜｯｼｬ	4	(VM200-500)
-	02010-20010		WASHER	ﾜｯｼｬ	8	(VM550,600)
23	02000-20010		WASHER	ﾜｯｼｬ	4	(VM200-500)
-	02000-20010		WASHER	ﾜｯｼｬ	8	(VM550,600)
24	01120-12040		BOLT	ﾎﾞﾙﾄ	2	(VM200-500)
-	01120-12040		BOLT	ﾎﾞﾙﾄ	4	(VM550,600)
25	01400-00012		NUT	ﾅｯﾄ	2	(VM200-500)
-	01400-00012		NUT	ﾅｯﾄ	4	(VM550,600)
26	214A8-42661		BOLT	ﾎﾞﾙﾄ	2	
27	23500-82001		PIN,ANCHOR	ﾋﾟﾝ	2	
28	52672-72231		PIN,ANCHOR	ﾋﾟﾝ	2	
29	22218-40191		NUT	ﾅｯﾄ	4	
30	01400-00018		NUT	ﾅｯﾄ	4	
31	02200-03030		PIN	ﾋﾟﾝ	4	
32	234A8-43501		SHEAVE	ｼｰﾌﾞ	2	
33	02100-00040		RING,SNAP	ｽﾅｯﾌﾟﾘﾝｸﾞ	2	

FIG.161 LIFT CYLINDER [VM2N5]

(M7028410) ﾘﾌﾄｼﾘﾝﾀﾞ

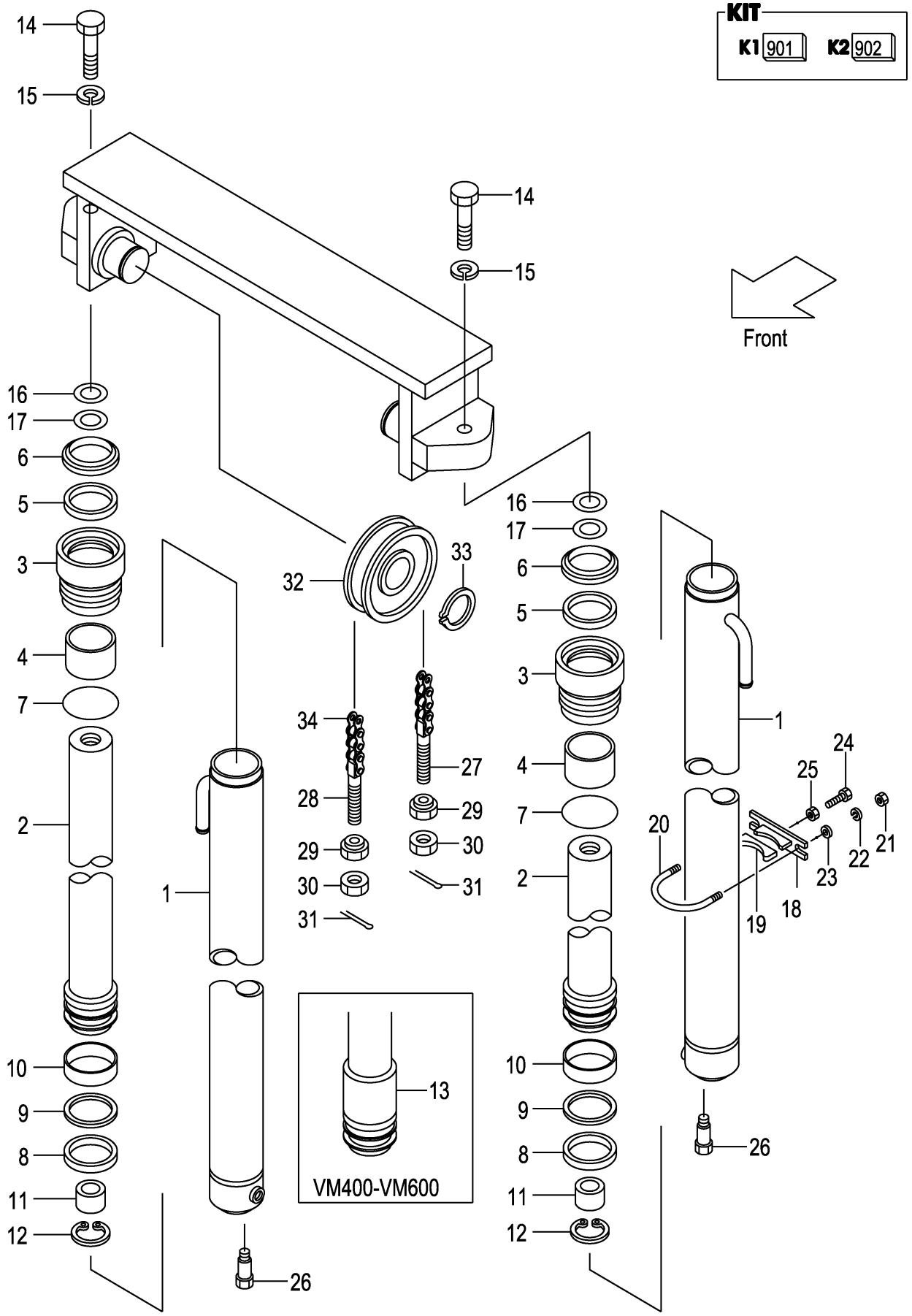

A:VM2N5(2T)
B:VM2N5(2.5T)

Item No	Part No.	Mark	Description	Req'd	Remarks : Serial No.
34	22679-45711		CHAIN,LEAF VM200 チェーン	2	
-	22679-45771		CHAIN,LEAF VM225 チェーン	2	
-	22679-45851		CHAIN,LEAF VM250 チェーン	2	
-	22679-45891		CHAIN,LEAF VM270 チェーン	2	
-	22679-45911		CHAIN,LEAF VM275 チェーン	2	
-	22679-45971		CHAIN,LEAF VM300 チェーン	2	
-	22679-46031		CHAIN,LEAF VM325 チェーン	2	
-	22679-46051		CHAIN,LEAF VM330 チェーン	2	
-	22679-46111		CHAIN,LEAF VM350 チェーン	2	
-	22679-46151		CHAIN,LEAF VM366 チェーン	2	
-	22679-46151		CHAIN,LEAF VM370 チェーン	2	
-	22679-46171		CHAIN,LEAF VM375 チェーン	2	
-	22679-46271		CHAIN,LEAF VM400 チェーン	2	
-	22679-46331		CHAIN,LEAF VM425 チェーン	2	
-	22679-46391		CHAIN,LEAF VM450 チェーン	2	
-	22679-46451		CHAIN,LEAF VM475 チェーン	2	
-	22679-46531		CHAIN,LEAF VM500 チェーン	2	
-	22679-46691		CHAIN,LEAF VM550 チェーン	2	
-	22679-46811		CHAIN,LEAF VM600 チェーン	2	

FIG.162 MAST PIPING [VM2N5]

(M7028420) マストパイピング

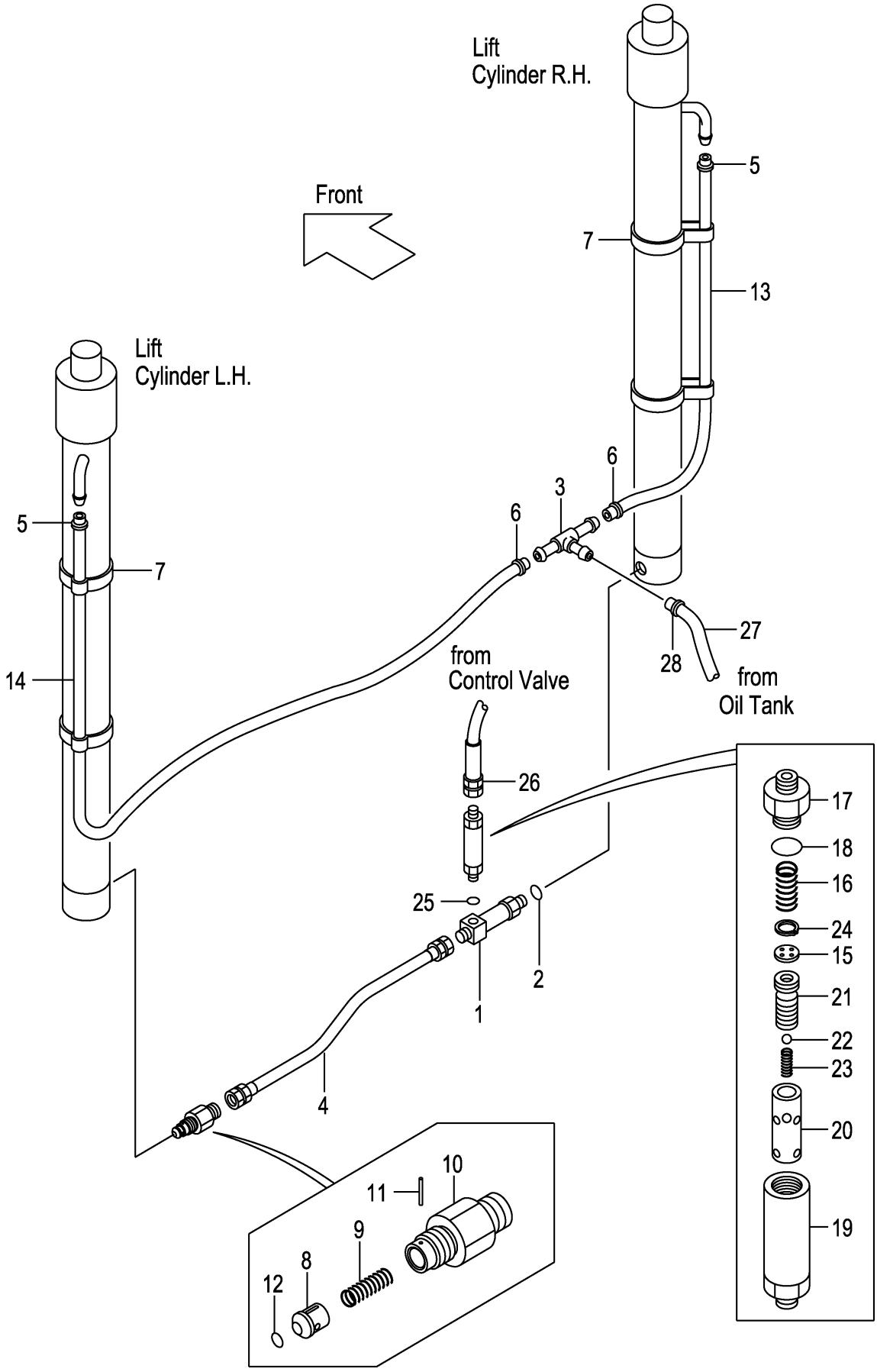

A:VM2N5(2T)
B:VM2N5(2.5T)

Item No	Part No.	Mark	Description		Req'd	Remarks : Serial No.
A1	234A8-41101		THREE-WAY-ASSY	ｽﾘｰｳｪｲｱｯｾﾝ	1	INC.1,2
1	NO PART NO.	#	THREE-WAY	ｽﾘｰｳｪｲ	1	
2	03320-00140		O-RING	Oﾘﾝｸﾞ	1	
3	53675-55051		THREE-WAY	ｽﾘｰｳｪｲ	1	
4	234A8-02201		HOSE	ﾎｰｽ	1	
5	24329-46201		CLIP	ｸﾘｯﾌﾟ	2	
6	04911-00021		CLIP	ｸﾘｯﾌﾟ	2	
7	22N58-45001		BAND	ﾊﾞﾝﾄﾞ	4	
A2	234A8-40701		VALVE-ASSY,CUT	ｶｯﾄﾊﾞﾙﾌﾞｱｯｾﾝ	1	INC.8-12
8	234A8-42602		PISTON	ﾋﾟｽﾄﾝ	1	
9	234A8-42611		SPRING	ｽﾌﾟﾘﾝｸﾞ	1	
10	234A8-42622		NIPPLE	ﾆｯﾌﾟﾙ	1	
11	02270-01014		PIN	ﾋﾟﾝ	1	
12	03320-00140		O-RING	Oﾘﾝｸﾞ	1	
13	04710-04110		HOSE,RH VM200	ﾎｰｽ	1	
-	04710-04120		HOSE,RH VM225	ﾎｰｽ	1	
-	04710-04135		HOSE,RH VM250	ﾎｰｽ	1	
-	04710-04145		HOSE,RH VM270	ﾎｰｽ	1	
-	04710-04145		HOSE,RH VM275	ﾎｰｽ	1	
-	04710-04160		HOSE,RH VM300	ﾎｰｽ	1	
-	04710-04170		HOSE,RH VM325	ﾎｰｽ	1	
-	04710-04175		HOSE,RH VM330	ﾎｰｽ	1	
-	04710-04185		HOSE,RH VM350	ﾎｰｽ	1	
-	04710-04195		HOSE,RH VM366	ﾎｰｽ	1	
-	04710-04195		HOSE,RH VM370	ﾎｰｽ	1	
-	04710-04195		HOSE,RH VM375	ﾎｰｽ	1	
-	04710-04215		HOSE,RH VM400	ﾎｰｽ	1	
-	04710-04225		HOSE,RH VM425	ﾎｰｽ	1	
-	04710-04240		HOSE,RH VM450	ﾎｰｽ	1	
-	04710-04250		HOSE,RH VM475	ﾎｰｽ	1	
-	04710-04265		HOSE,RH VM500	ﾎｰｽ	1	
-	04710-04295		HOSE,RH VM550	ﾎｰｽ	1	
-	04710-04320		HOSE,RH VM600	ﾎｰｽ	1	
14	04710-04145		HOSE,LH VM200	ﾎｰｽ	1	
-	04710-04165		HOSE,LH VM225	ﾎｰｽ	1	
-	04710-04170		HOSE,LH VM250	ﾎｰｽ	1	
-	04710-04180		HOSE,LH VM270	ﾎｰｽ	1	
-	04710-04180		HOSE,LH VM275	ﾎｰｽ	1	
-	04710-04190		HOSE,LH VM300	ﾎｰｽ	1	
-	04710-04205		HOSE,LH VM325	ﾎｰｽ	1	
-	04710-04210		HOSE,LH VM330	ﾎｰｽ	1	
-	04710-04220		HOSE,LH VM350	ﾎｰｽ	1	
-	04710-04230		HOSE,LH VM366	ﾎｰｽ	1	
-	04710-04230		HOSE,LH VM370	ﾎｰｽ	1	
-	04710-04230		HOSE,LH VM375	ﾎｰｽ	1	
-	04710-04250		HOSE,LH VM400	ﾎｰｽ	1	
-	04710-04260		HOSE,LH VM425	ﾎｰｽ	1	
-	04710-04275		HOSE,LH VM450	ﾎｰｽ	1	
-	04710-04285		HOSE,LH VM475	ﾎｰｽ	1	
-	04710-04300		HOSE,LH VM500	ﾎｰｽ	1	

FIG.162 MAST PIPING [VM2N5]

(M7028420) マストパイピング

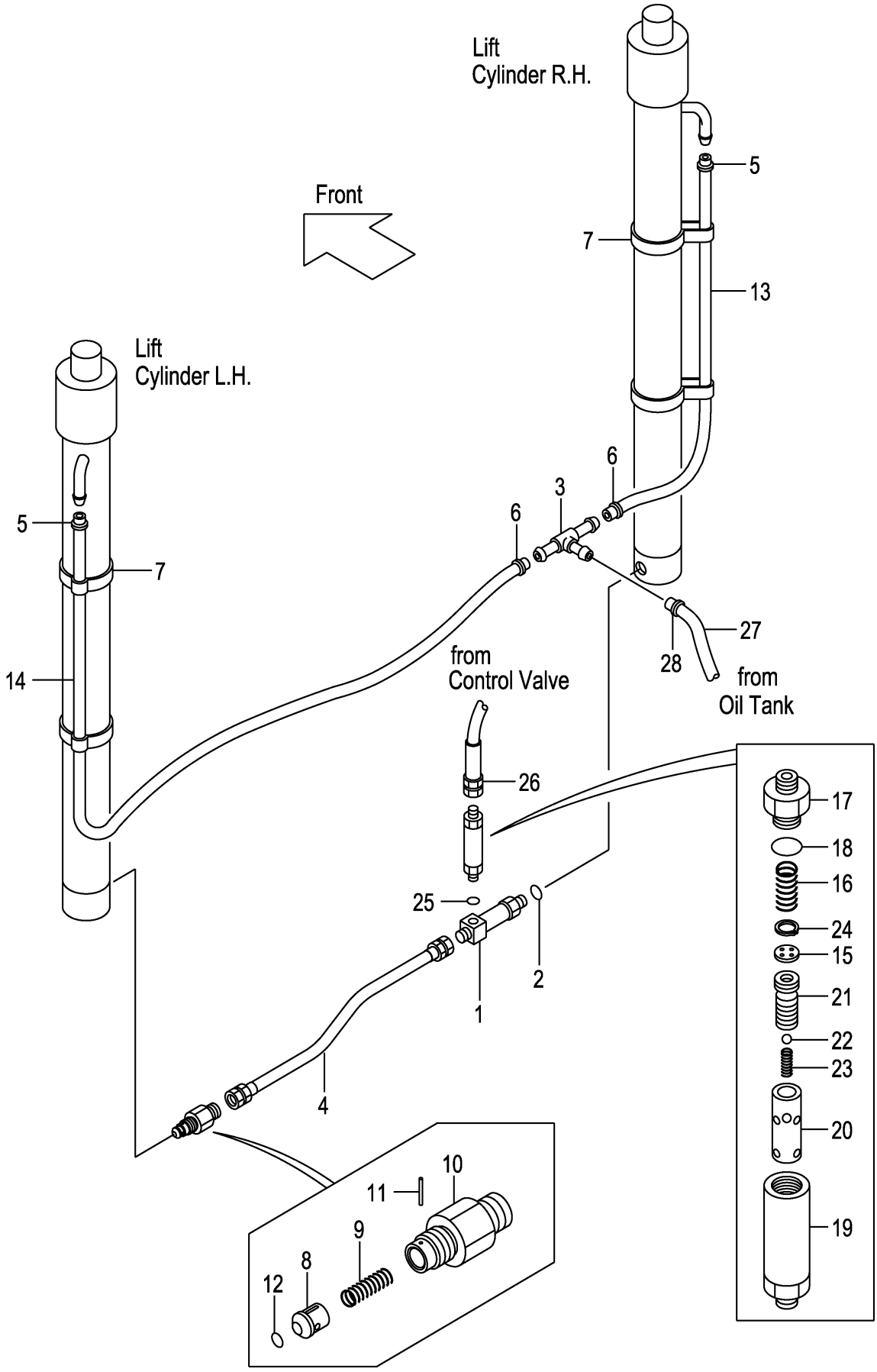

A:VM2N5(2T)
B:VM2N5(2.5T)

Item No	Part No.	Mark	Description		Req'd	Remarks : Serial No.
-	04710-04330		HOSE,LH VM550	ﾎｰｽ	1	
-	04710-04355		HOSE,LH VM600	ﾎｰｽ	1	
A3	234A8-41001		REGURATOR-ASSY,FLOW	ﾌﾛｰﾚｷﾞｭﾚｰﾀｱｯｾﾝ	1	INC.15-24
15	NO PART NO.	#	PLATE	ﾌﾟﾚｰﾄ	1	
16	27979-43101		SPRING	ｽﾌﾟﾘﾝｸﾞ	1	
17	NO PART NO.	#	NIPPLE	ﾆｯﾌﾟﾙ	1	
18	03320-00280		O-RING	Oﾘﾝｸﾞ	1	
19	NO PART NO.	#	CASE	ｹｰｽ	1	
20	NO PART NO.	#	SLEEVE	ｽﾘｰﾌﾞ	1	
21	NO PART NO.	#	PISTON	ﾋﾟｽﾄﾝ	1	
22	24459-42951		BALL,NYLON	ﾎﾞｰﾙ	1	
23	214A8-44151		SPRING	ｽﾌﾟﾘﾝｸﾞ	1	
24	02110-00018		RING,SNAP	ｽﾅｯﾌﾟﾘﾝｸﾞ	1	
25	03320-00180		O-RING	Oﾘﾝｸﾞ	1	
26	234A8-02101		HOSE	ﾎｰｽ	1	
27	04710-04130		HOSE	ﾎｰｽ	1	
28	04911-00021		CLIP	ｸﾘｯﾌﾟ	2	

M E M O

M E M O

FIG.163 FORK [VFM2N5]

(M7028140) フォーク

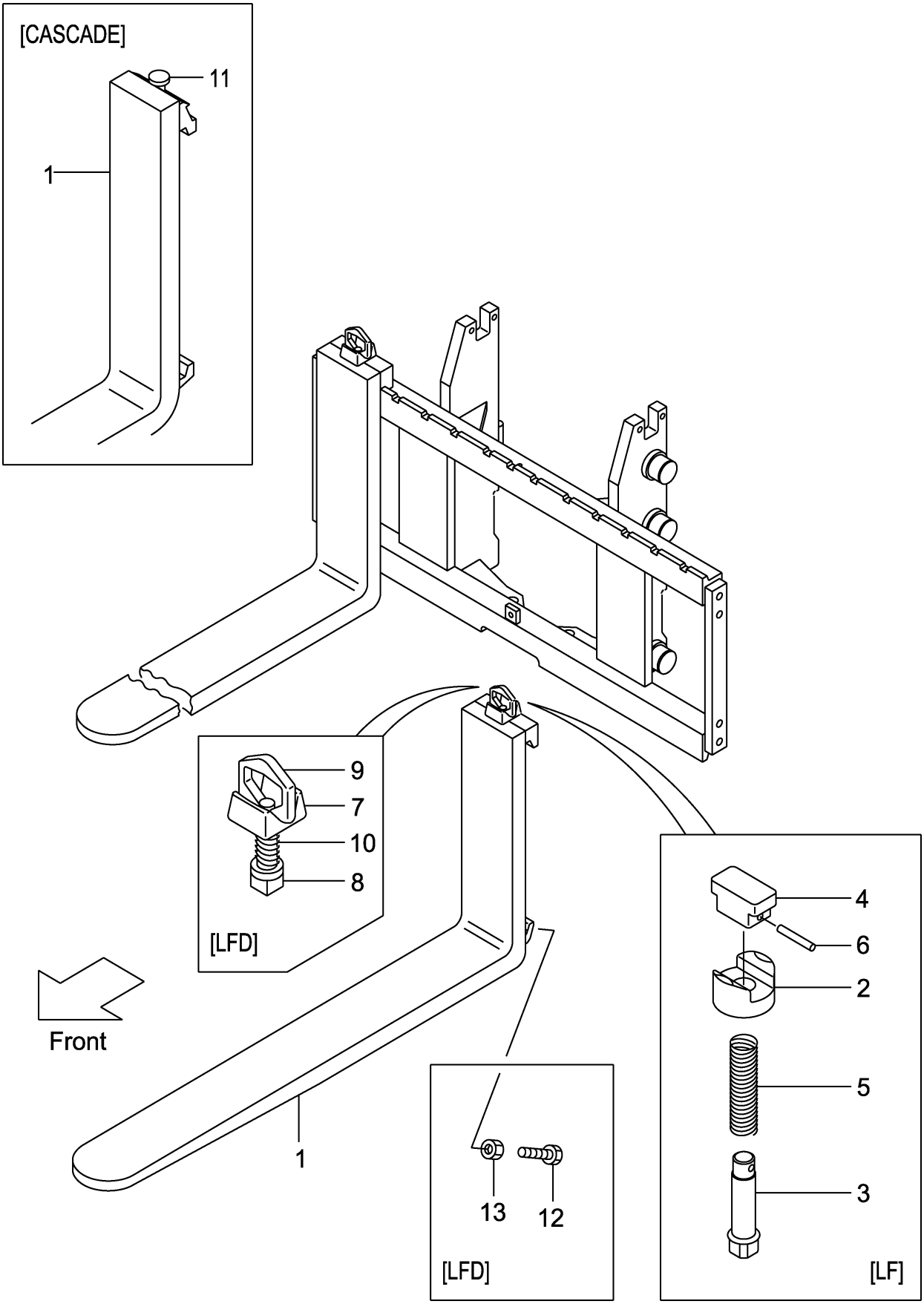

A:VFM2N5(2T)
B:VFM2N5(2.5T)

Item No	Part No.	Mark	Description		Req'd	Remarks : Serial No.
1	231A8-10101		FORK	ﾌｫｰｸ	2	A (L=920) INC.2-6
-	214A8-10512		FORK	ﾌｫｰｸ	2	B (L=1070) INC.2-6
-	231A8-10171		FORK	ﾌｫｰｸ	2	A [LF090] INC.2-6
-	231F8-10571		FORK	ﾌｫｰｸ	2	B [LF090] INC.2-6
-	231A8-10101		FORK	ﾌｫｰｸ	2	A [LF092] INC.2-6
-	231F8-10501		FORK	ﾌｫｰｸ	2	B [LF092] INC.2-6
-	214A8-10512		FORK	ﾌｫｰｸ	2	[EX] INC.2-6
-	214A8-10582		FORK	ﾌｫｰｸ	2	[LF100] INC.2-6
-	214A8-10512		FORK	ﾌｫｰｸ	2	[LF107] INC.2-6
-	214A8-10592		FORK	ﾌｫｰｸ	2	[LF110] INC.2-6
-	214A8-10602		FORK	ﾌｫｰｸ	2	[LF120] INC.2-6
-	214A8-10522		FORK	ﾌｫｰｸ	2	[LF122] INC.2-6
-	214A8-10612		FORK	ﾌｫｰｸ	2	[LF130] INC.2-6
-	214A8-10532		FORK	ﾌｫｰｸ	2	[LF137] INC.2-6
-	214A8-10622		FORK	ﾌｫｰｸ	2	[LF140] INC.2-6
-	214A8-10632		FORK	ﾌｫｰｸ	2	[LF150] INC.2-6
-	214A8-10542		FORK	ﾌｫｰｸ	2	[LF152] INC.2-6
-	214A8-10642		FORK	ﾌｫｰｸ	2	[LF160] INC.2-6
-	214A8-10552		FORK	ﾌｫｰｸ	2	[LF167] INC.2-6
-	214A8-10653		FORK	ﾌｫｰｸ	2	[LF170] INC.2-6
-	214A8-10663		FORK	ﾌｫｰｸ	2	[LF180] INC.2-6
-	214A8-10563		FORK	ﾌｫｰｸ	2	[LF182] INC.2-6
-	214A8-10673		FORK	ﾌｫｰｸ	2	[LF190] INC.2-6
-	214A8-10683		FORK	ﾌｫｰｸ	2	[LF200] INC.2-6
-	234A8-10571		FORK	ﾌｫｰｸ	2	[LFD090] INC.7-10
-	234A8-10501		FORK	ﾌｫｰｸ	2	[LFD092] INC.7-10
-	234A8-10581		FORK	ﾌｫｰｸ	2	[LFD100] INC.7-10
-	234A8-10511		FORK	ﾌｫｰｸ	2	[LFD107] INC.7-10
-	234A8-10591		FORK	ﾌｫｰｸ	2	[LFD110] INC.7-10
-	234A8-10601		FORK	ﾌｫｰｸ	2	[LFD120] INC.7-10
-	234A8-10521		FORK	ﾌｫｰｸ	2	[LFD122] INC.7-10
-	234A8-10611		FORK	ﾌｫｰｸ	2	[LFD130] INC.7-10
-	234A8-10531		FORK	ﾌｫｰｸ	2	[LFD137] INC.7-10
-	234A8-10621		FORK	ﾌｫｰｸ	2	[LFD140] INC.7-10
-	234A8-10631		FORK	ﾌｫｰｸ	2	[LFD150] INC.7-10
-	234A8-10541		FORK	ﾌｫｰｸ	2	[LFD152] INC.7-10
-	234A8-10641		FORK	ﾌｫｰｸ	2	[LFD160] INC.7-10
-	234A8-10551		FORK	ﾌｫｰｸ	2	[LFD167] INC.7-10
-	234A8-10652		FORK	ﾌｫｰｸ	2	[LFD170] INC.7-10
-	234A8-10662		FORK	ﾌｫｰｸ	2	[LFD180] INC.7-10
-	234A8-10562		FORK	ﾌｫｰｸ	2	[LFD182] INC.7-10
-	234A8-10672		FORK	ﾌｫｰｸ	2	[LFD190] INC.7-10
-	234A8-10682		FORK	ﾌｫｰｸ	2	[LFD200] INC.7-10
-	22N58-10501		FORK	ﾌｫｰｸ	2	[LF092/CASCADE] INC.11

FIG.163 FORK [VFM2N5]

(M7028140) フォーク

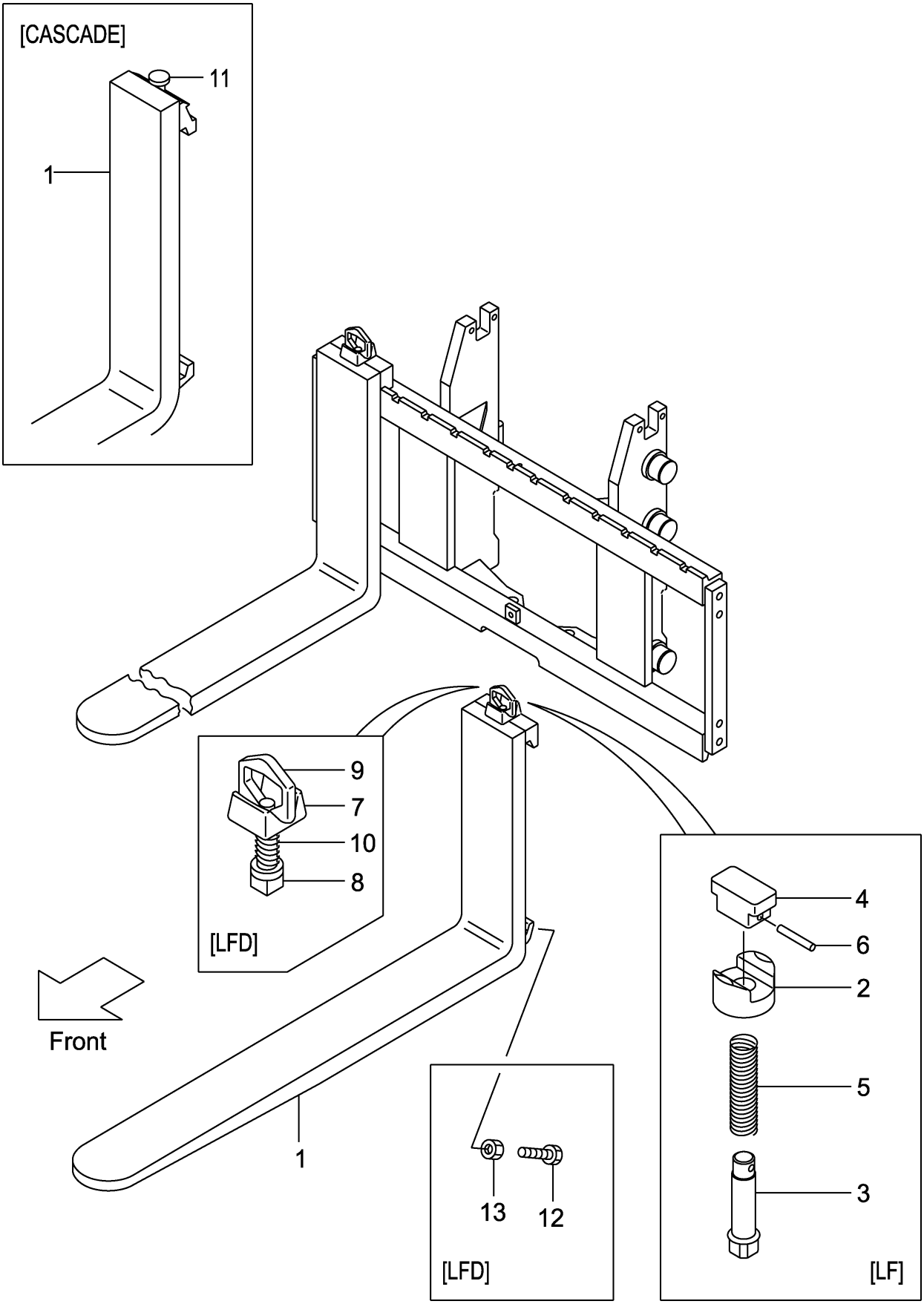

A:VFM2N5(2T)
B:VFM2N5(2.5T)

Item No	Part No.	Mark	Description		Req'd	Remarks : Serial No.
-	22N58-10511		FORK	ﾌｫｰｸ	2	[LF107/CASCADE] INC.11
-	22N58-10521		FORK	ﾌｫｰｸ	2	[LF122/CASCADE] INC.11
2	216G8-12921		HOLDER	ﾎﾙﾀﾞ	2	[LF]
3	231A8-12001		PIN	ﾋﾟﾝ	2	[LF]
4	231A8-12011		KNOB	ﾉﾌﾞ	2	[LF]
5	231A8-12021		SPRING	ｽﾌﾟﾘﾝｸﾞ	2	[LF]
6	231A8-12031		PIN,SPRING	ﾋﾟﾝ	2	[LF]
A1	214A8-11001		STOPPER-ASSY,FORK	ﾌｫｰｸｽﾄｯﾊﾟｱｯｾﾝ	2	[LFD] INC.7-10
7	214A8-12001		HEAD	ﾍｯﾄﾞ	2	[LFD]
8	214A8-12011		STOPPER	ｽﾄｯﾊﾟ	2	[LFD]
9	214A8-12021		HANDLE	ﾊﾝﾄﾞﾙ	2	[LFD]
10	214A8-12031		SPRING	ｽﾌﾟﾘﾝｸﾞ	2	[LFD]
11	W-K2PK-M		KIT,PIN,STOPPER	ｽｯﾄﾊﾟﾋﾟﾝｷｯﾄ	2	[CASCADE]
12	216G8-12101		BOLT	ﾎﾞﾙﾄ	4	[LFD]
13	01402-00010		NUT	ﾅｯﾄ	4	[LFD]

M E M O

M E M O

FIG.164 LIFT BRACKET [VFM2N5]

(M7020610) ﾘﾌﾄﾌﾞﾗｹｯﾄ

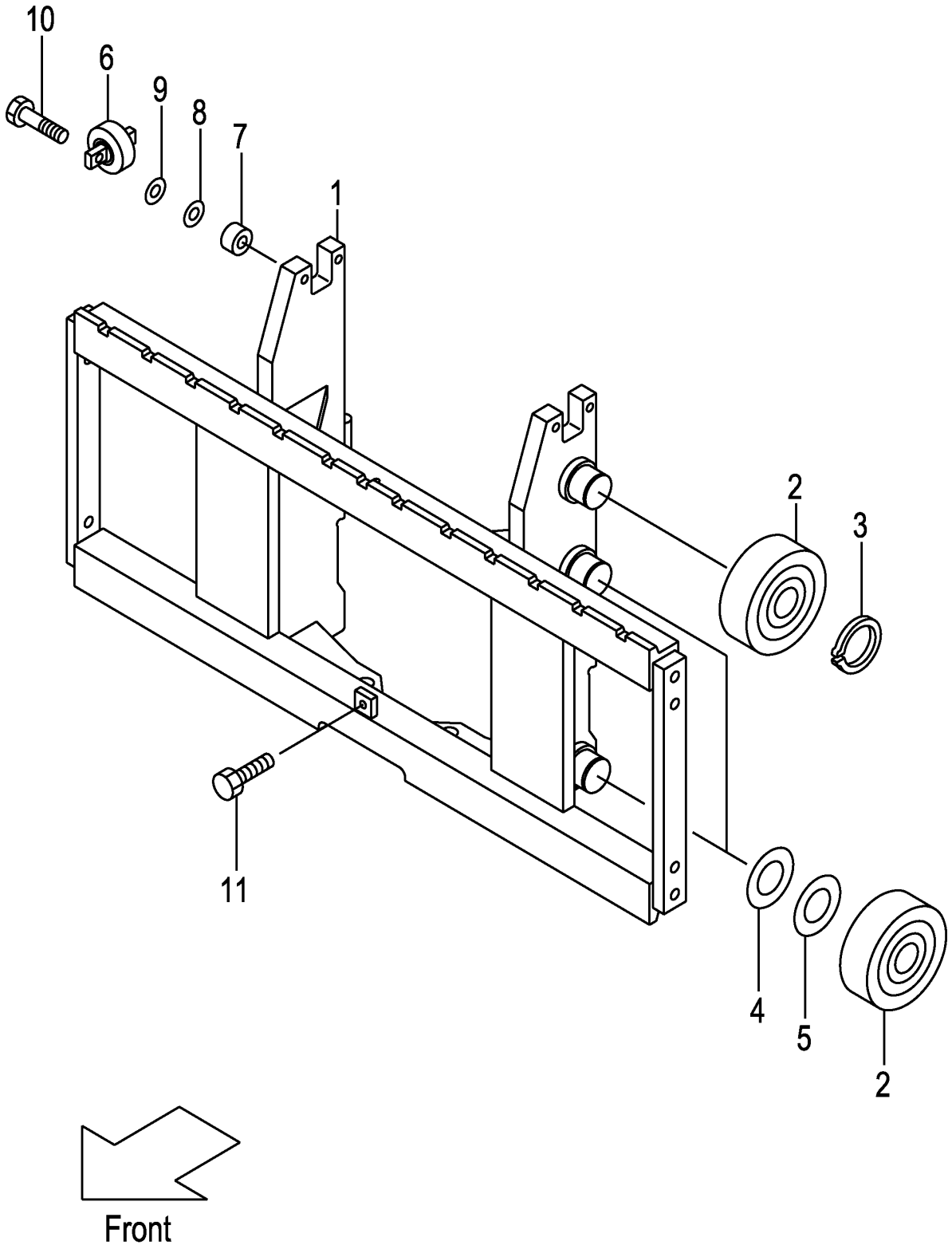

A:VFM2N5(2T)
B:VFM2N5(2.5T)

Item No	Part No.	Mark	Description		Req'd	Remarks : Serial No.
1	22N50-60201		BRACKET,LIFT	ﾌﾞﾗｹｯﾄ	1	
-	52N51-61201		BRACKET,LIFT	ﾌﾞﾗｹｯﾄ	1	[WFX110][WFX114][WFX127] [WFX135][WFX138]
-	52N51-61211		BRACKET,LIFT	ﾌﾞﾗｹｯﾄ	1	[WFX135][WFX138][WFX145] [WFX146][WFX154][WFX180]
2	277P8-22051		ROLLER,END,119.0	ﾛｰﾗ	6	
-	577P3-74001		ROLLER,END,119.0	ﾛｰﾗ	6	[FC][CS35][FCS35][FCS45] [FCS55]
-	277P8-22061		ROLLER,END,119.5	ﾛｰﾗ	(6)	
-	577P3-74011		ROLLER,END,119.5	ﾛｰﾗ	(6)	[FC][CS35][FCS35][FCS45] [FCS55]
3	02100-00045		RING,SNAP	ｽﾅｯﾌﾟﾘﾝｸﾞ	2	
4	277P8-22071		SHIM,T-0.5	ｼﾑ	5	
5	277P8-22081		SHIM,T-1.0	ｼﾑ	5	
6	22N58-32701		ROLLER,SIDE	ﾛｰﾗ	2	
-	52N53-74001		ROLLER,SIDE	ﾛｰﾗ	2	[FC][CS35][FCS35][FCS45] [FCS55]
7	22N58-32711		SPACER	ｽﾍﾟｰｻ	4	
8	22018-30261		SHIM	ｼﾑ	8	
9	22018-30121		SHIM	ｼﾑ	4	
10	01103-10045		BOLT	ﾎﾞﾙﾄ	4	
11	01184-12025		BOLT	ﾎﾞﾙﾄ	1	

FIG.165 BACKREST [VFM2N5]

(M7028250) ﾊﾞｯｸﾚｽﾄ

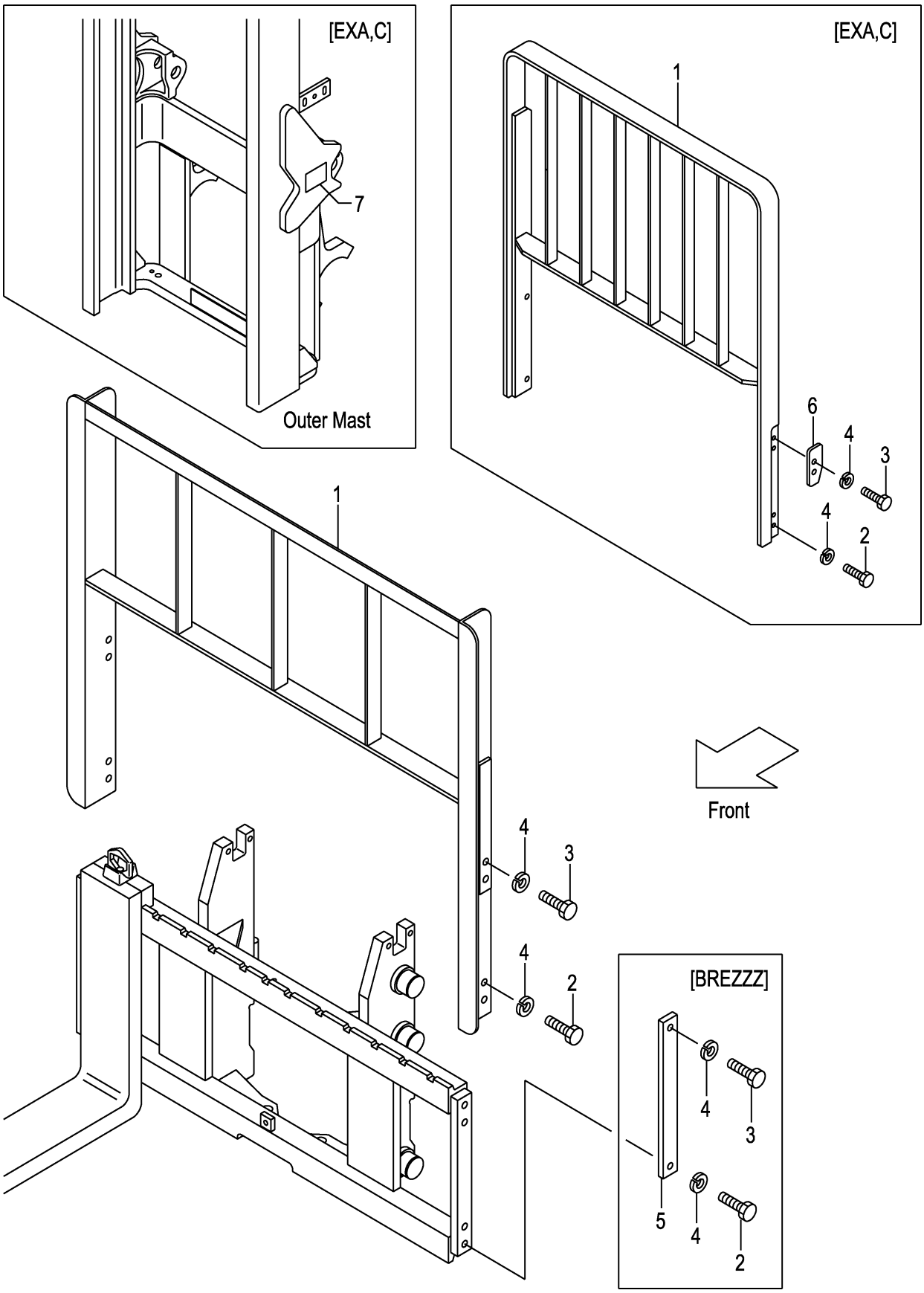

A:VFM2N5(2T)
B:VFM2N5(2.5T)

Item No	Part No.	Mark	Description		Req'd	Remarks : Serial No.
1	234A8-22202		BACKREST	ﾊﾞｯｸﾚｽﾄ	1	
-	239A8-20101		BACKREST	ﾊﾞｯｸﾚｽﾄ	1	[HBR110]
-	239A8-20111		BACKREST	ﾊﾞｯｸﾚｽﾄ	1	[HBR120]
-	239A8-20121		BACKREST	ﾊﾞｯｸﾚｽﾄ	1	[HBR130]
-	239A8-20131		BACKREST	ﾊﾞｯｸﾚｽﾄ	1	[HBR140]
-	239A8-20141		BACKREST	ﾊﾞｯｸﾚｽﾄ	1	[HBR150]
-	534A1-64402		BACKREST	ﾊﾞｯｸﾚｽﾄ	1	[WFX135]
-	534A1-64412		BACKREST	ﾊﾞｯｸﾚｽﾄ	1	[WFX146]
-	534A2-74001		BACKREST	ﾊﾞｯｸﾚｽﾄ	1	[EXA][EXC]
-	534A2-74101		BACKREST	ﾊﾞｯｸﾚｽﾄ	1	[EXA/WFX135][EXC/WFX135]
-	534A2-74201		BACKREST	ﾊﾞｯｸﾚｽﾄ	1	[EXA/WFX146][EXC/WFX146]
2	01100-14025		BOLT	ﾎﾞﾙﾄ	4	
-	01100-14025		BOLT	ﾎﾞﾙﾄ	4	[EXA][EXC]
-	01100-14030		BOLT	ﾎﾞﾙﾄ	4	[HBR]
-	01100-14025		BOLT	ﾎﾞﾙﾄ	2	[BREZZZ]
3	01100-14030		BOLT	ﾎﾞﾙﾄ	4	
-	01100-14035		BOLT	ﾎﾞﾙﾄ	4	[EXA][EXC]
-	01100-14030		BOLT	ﾎﾞﾙﾄ	4	[HBR]
-	01100-14025		BOLT	ﾎﾞﾙﾄ	2	[BREZZZ]
4	02010-00014		WASHER	ﾜｯｼｬ	8	
-	02010-00014		WASHER	ﾜｯｼｬ	4	[BREZZZ]
5	23659-42161		PLATE,SIDE	ﾌﾟﾚｰﾄ	2	[BREZZZ]
6	534A2-74051		PLATE,STOPPER	ﾌﾟﾚｰﾄ	2	[EXA][EXC]
7	534A2-74301		DECAL,CAUTION	ﾃﾞｶﾙ	1	[EXA][EXC]

FIG.166 MAST [VFM2N5]

(M7020410) マスト

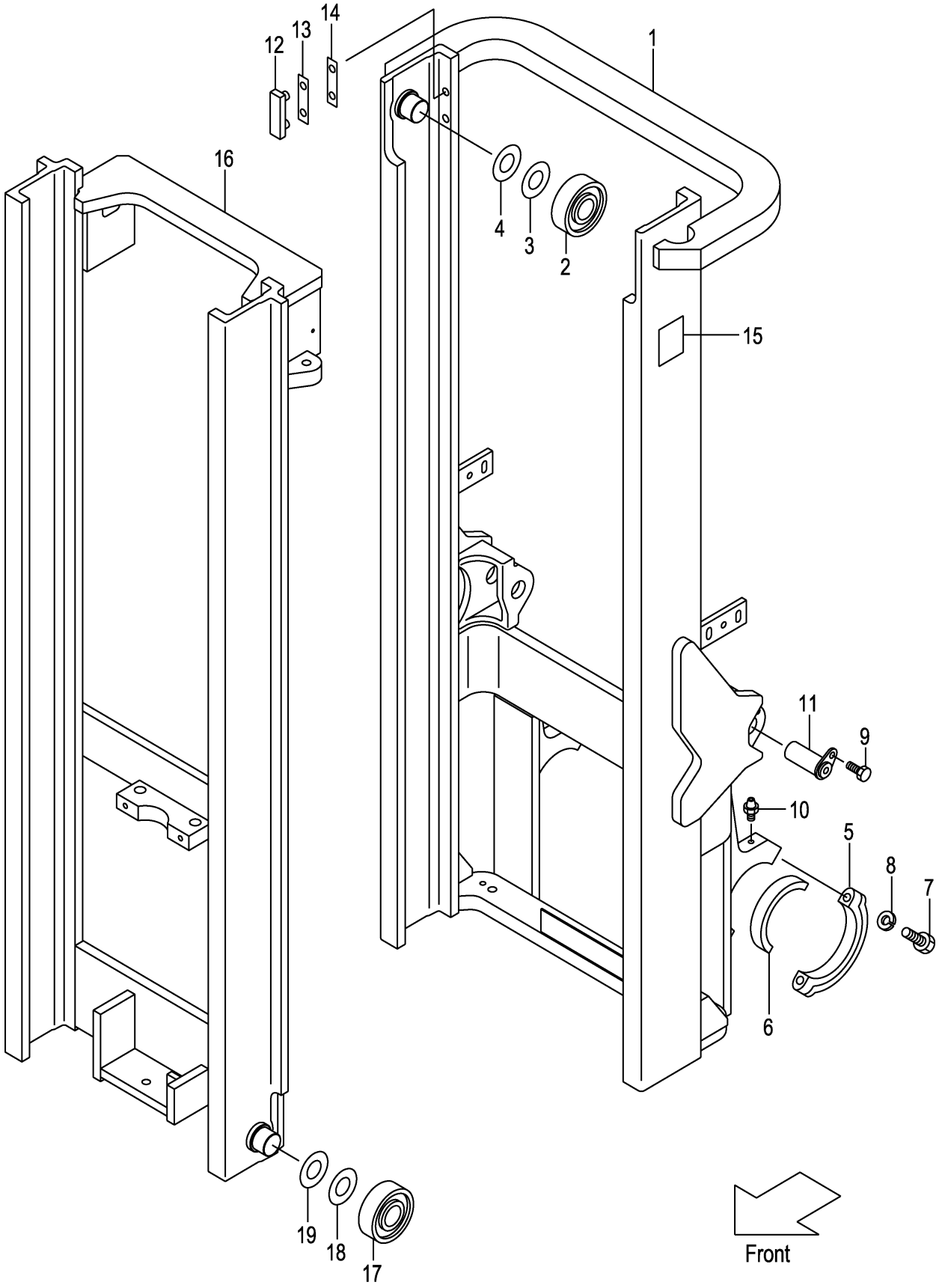

A:VFM2N5(2T)
B:VFM2N5(2.5T)

Item No	Part No.	Mark	Description		Req'd	Remarks : Serial No.
1	22N50-40211		MAST,OUTER VFM200	ｱｳﾀﾏｽﾄ	1	
-	22N50-40221		MAST,OUTER VFM225	ｱｳﾀﾏｽﾄ	1	
-	22N50-40231		MAST,OUTER VFM250	ｱｳﾀﾏｽﾄ	1	
-	22N50-40241		MAST,OUTER VFM270	ｱｳﾀﾏｽﾄ	1	
-	22N50-40251		MAST,OUTER VFM275	ｱｳﾀﾏｽﾄ	1	
-	22N50-40201		MAST,OUTER VFM300	ｱｳﾀﾏｽﾄ	1	
-	22N50-40261		MAST,OUTER VFM325	ｱｳﾀﾏｽﾄ	1	
-	22N50-40271		MAST,OUTER VFM330	ｱｳﾀﾏｽﾄ	1	
-	22N50-40281		MAST,OUTER VFM350	ｱｳﾀﾏｽﾄ	1	
-	22N50-40291		MAST,OUTER VFM366	ｱｳﾀﾏｽﾄ	1	
-	22N50-40301		MAST,OUTER VFM370	ｱｳﾀﾏｽﾄ	1	
-	22N50-40311		MAST,OUTER VFM375	ｱｳﾀﾏｽﾄ	1	
-	22N50-40321		MAST,OUTER VFM400	ｱｳﾀﾏｽﾄ	1	
-	22N50-40331		MAST,OUTER VFM425	ｱｳﾀﾏｽﾄ	1	
-	22N50-40341		MAST,OUTER VFM450	ｱｳﾀﾏｽﾄ	1	
-	22N50-40351		MAST,OUTER VFM475	ｱｳﾀﾏｽﾄ	1	
-	22N50-40361		MAST,OUTER VFM500	ｱｳﾀﾏｽﾄ	1	
-	22N50-40371		MAST,OUTER VFM550	ｱｳﾀﾏｽﾄ	1	
-	22N50-40381		MAST,OUTER VFM600	ｱｳﾀﾏｽﾄ	1	
2	277P8-22051		ROLLER,END,119.0	ﾛｰﾗ	2	
-	577P3-74001		ROLLER,END,119.0	ﾛｰﾗ	2	[FC][CS35][FCS35][FCS45] [FCS55]
3	277P8-22071		SHIM,T-0.5	ｼﾑ	12	
4	277P8-22081		SHIM,T-1.0	ｼﾑ	12	
5	277P8-32701		CAP	ｷｬｯﾌﾟ	2	
6	214A8-02201		BUSHING	ﾌﾞｯｼﾝｸﾞ	2	
7	01103-16065		BOLT	ﾎﾞﾙﾄ	4	
8	02011-00016		WASHER	ﾜｯｼｬ	4	
9	216G8-52301		BOLT & WASHER	ﾎﾞﾙﾄ & ﾜｯｼｬ	2	
10	04901-00100		FITTING	ﾌｨｯﾃｨﾝｸﾞ	2	
11	272K8-52201		PIN	ﾋﾟﾝ	2	
12	216G8-33401		SLIPPER	ｽﾘｯﾊﾟ	2	
13	216G8-33361		SHIM,T-0.5	ｼﾑ	8	
14	216G8-33371		SHIM,T-1.0	ｼﾑ	4	
15	23678-06002		PLATE,NAME	ﾌﾟﾚｰﾄ	1	
16	22N50-40411		MAST,INNER VFM200	ｲﾝﾅﾏｽﾄ	1	
-	22N50-40421		MAST,INNER VFM225	ｲﾝﾅﾏｽﾄ	1	
-	22N50-40431		MAST,INNER VFM250	ｲﾝﾅﾏｽﾄ	1	
-	22N50-40441		MAST,INNER VFM270	ｲﾝﾅﾏｽﾄ	1	
-	22N50-40451		MAST,INNER VFM275	ｲﾝﾅﾏｽﾄ	1	
-	22N50-40401		MAST,INNER VFM300	ｲﾝﾅﾏｽﾄ	1	
-	22N50-40461		MAST,INNER VFM325	ｲﾝﾅﾏｽﾄ	1	
-	22N50-40471		MAST,INNER VFM330	ｲﾝﾅﾏｽﾄ	1	
-	22N50-40481		MAST,INNER VFM350	ｲﾝﾅﾏｽﾄ	1	
-	22N50-40491		MAST,INNER VFM366	ｲﾝﾅﾏｽﾄ	1	
-	22N50-40501		MAST,INNER VFM370	ｲﾝﾅﾏｽﾄ	1	
-	22N50-40511		MAST,INNER VFM375	ｲﾝﾅﾏｽﾄ	1	
-	22N50-40521		MAST,INNER VFM400	ｲﾝﾅﾏｽﾄ	1	
-	22N50-40531		MAST,INNER VFM425	ｲﾝﾅﾏｽﾄ	1	
-	22N50-40541		MAST,INNER VFM450	ｲﾝﾅﾏｽﾄ	1	

FIG.166 MAST [VFM2N5]

(M7020410) マスト

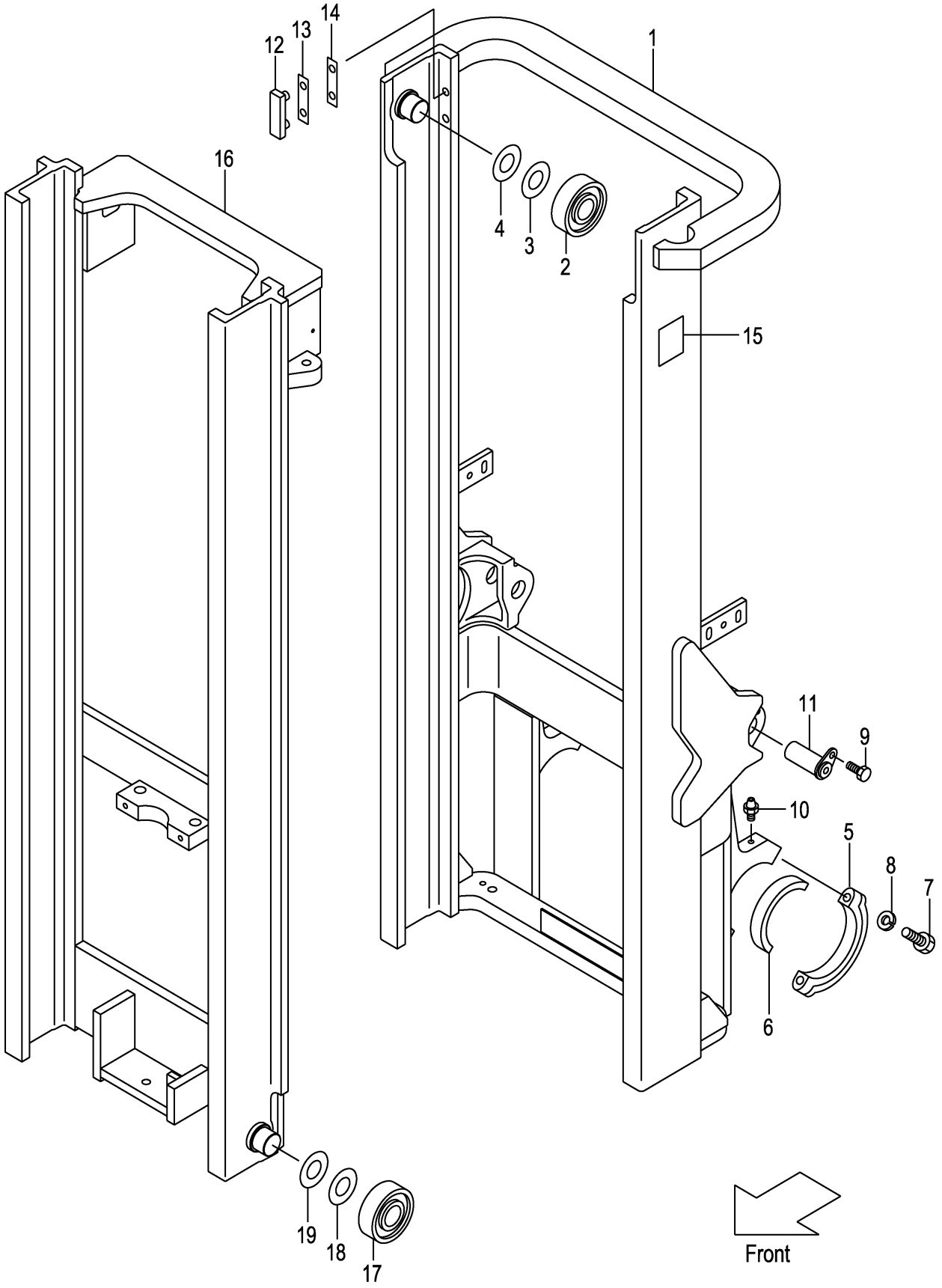

A:VFM2N5(2T)
B:VFM2N5(2.5T)

Item No	Part No.	Mark	Description		Req'd	Remarks : Serial No.
-	22N50-40551		MAST,INNER VFM475	ｲﾝﾅﾏｽﾄ	1	
-	22N50-40561		MAST,INNER VFM500	ｲﾝﾅﾏｽﾄ	1	
-	22N50-40571		MAST,INNER VFM550	ｲﾝﾅﾏｽﾄ	1	
-	22N50-40581		MAST,INNER VFM600	ｲﾝﾅﾏｽﾄ	1	
17	277P8-22051		ROLLER,END,119.0	ﾛｰﾗ	2	
-	577P3-74001		ROLLER,END,119.0	ﾛｰﾗ	2	[FC][CS35][FCS35][FCS45] [FCS55]
-	277P8-22061		ROLLER,END,119.5	ﾛｰﾗ	(2)	
-	577P3-74011		ROLLER,END,119.5	ﾛｰﾗ	(2)	[FC][CS35][FCS35][FCS45] [FCS55]
18	277P8-22071		SHIM,T-0.5	ｼﾑ	12	
19	277P8-22081		SHIM,T-1.0	ｼﾑ	12	

M E M O

M E M O

FIG.167 TILT GAUGE [VFM2N5/(TG,PPC,PR,PRC,MPC)]

(M7020420) ﾃｨﾙﾄｹﾞｰｼﾞ

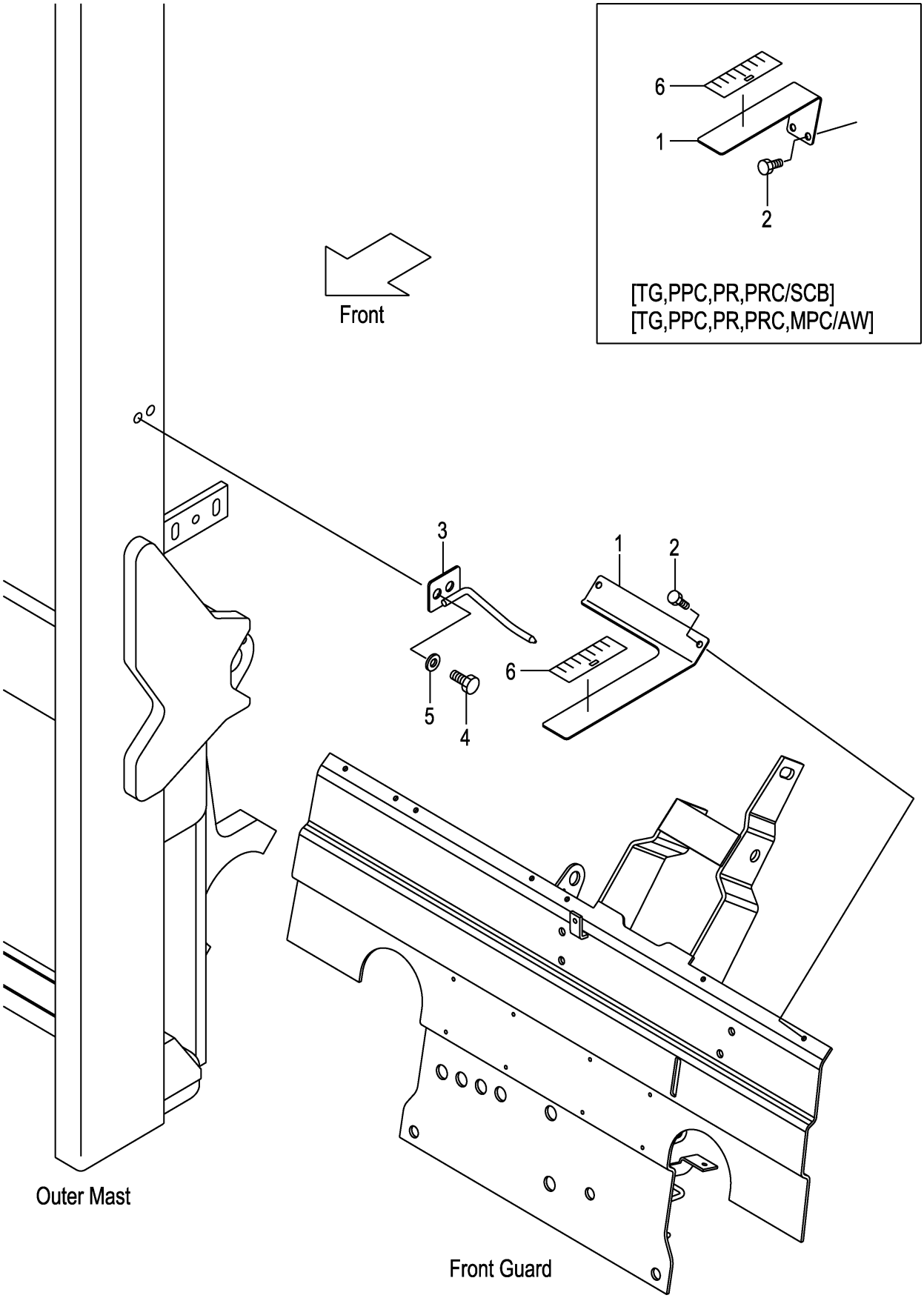

A:VFM2N5(2T)
B:VFM2N5(2.5T)

Item No	Part No.	Mark	Description		Req'd	Remarks : Serial No.
1	62A89-21811		GAUGE,TILT	ｹﾞｰｼﾞ	1	[VFM250-600/ (TG,PRC,PPC,MPC,PR)]
-	62A89-21831		GAUGE,TILT	ｹﾞｰｼﾞ	1	[VFM250-600/SCB/ (TG,PR,PPC,PRC)]
-	62A89-21831		GAUGE,TILT	ｹﾞｰｼﾞ	1	[VFM250-600/AW/ (TG,PR,PPC,PRC,MPC)]
2	01183-06020		BOLT	ﾎﾞﾙﾄ	2	[VFM250-600/ (TG,PRC,PPC,MPC,PR)]
-	01183-06020		BOLT	ﾎﾞﾙﾄ	2	[VFM250-600/SCB/ (TG,PR,PPC,PRC)]
-	01183-06020		BOLT	ﾎﾞﾙﾄ	2	[VFM250-600/AW/ (TG,PR,PPC,PRC,MPC)]
3	62A89-21851		INDICATOR	ｲﾝｼﾞｹｰﾀ	1	[VFM250-600/ (TG,PRC,PPC,MPC,PR)]
-	62A89-21851		INDICATOR	ｲﾝｼﾞｹｰﾀ	1	[VFM250-600/SCB/ (TG,PR,PPC,PRC)]
-	62A89-21851		INDICATOR	ｲﾝｼﾞｹｰﾀ	1	[VFM250-600/AW/ (TG,PR,PPC,PRC,MPC)]
4	01184-12025		BOLT	ﾎﾞﾙﾄ	2	[VFM250-600/ (TG,PRC,PPC,MPC,PR)]
-	01184-12025		BOLT	ﾎﾞﾙﾄ	2	[VFM250-600/SCB/ (TG,PR,PPC,PRC)]
-	01184-12025		BOLT	ﾎﾞﾙﾄ	2	[VFM250-600/AW/ (TG,PR,PPC,PRC,MPC)]
5	02000-00012		WASHER	ﾜｯｼｬ	2	[VFM250-600/ (TG,PRC,PPC,MPC,PR)]
-	02000-00012		WASHER	ﾜｯｼｬ	2	[VFM250-600/SCB/ (TG,PR,PPC,PRC)]
-	02000-00012		WASHER	ﾜｯｼｬ	2	[VFM250-600/AW/ (TG,PR,PPC,PRC,MPC)]
6	62459-23371		SEAL,GAUGE	ｼｰﾙ	1	[VFM250-600/ (TG,PRC,PPC,MPC,PR)]
-	62459-23371		SEAL,GAUGE	ｼｰﾙ	1	[VFM250-600/SCB/ (TG,PR,PPC,PRC)]
-	62459-23371		SEAL,GAUGE	ｼｰﾙ	1	[VFM250-600/AW/ (TG,PR,PPC,PRC,MPC)]

FIG.168 LIFT CYLINDER (FRONT) [VFM2N5]

(M7020510) リフトシリンダ(フロント)

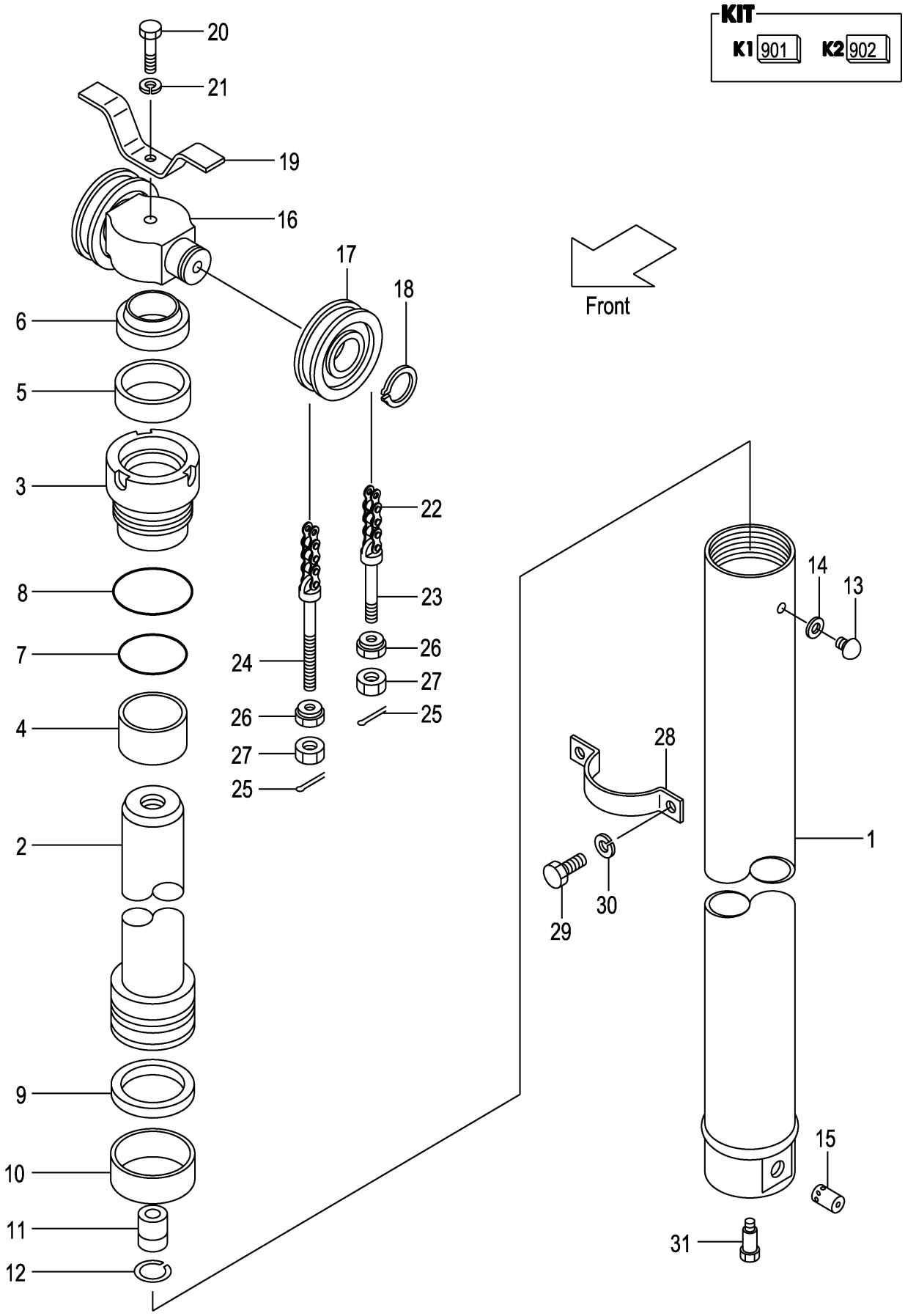

A:VFM2N5(2T)
B:VFM2N5(2.5T)

Item No	Part No.	Mark	Description		Req'd	Remarks : Serial No.
A1	22N50-50511		CYL-ASSY,LIFT VFM200	ﾘﾌﾄｼﾘﾝﾀﾞｱｯｾﾝ	1	INC.1-15
-	22N50-50521		CYL-ASSY,LIFT VFM225	ﾘﾌﾄｼﾘﾝﾀﾞｱｯｾﾝ	1	INC.1-15
-	22N50-50531		CYL-ASSY,LIFT VFM250	ﾘﾌﾄｼﾘﾝﾀﾞｱｯｾﾝ	1	INC.1-15
-	212T0-50511		CYL-ASSY,LIFT VFM270	ﾘﾌﾄｼﾘﾝﾀﾞｱｯｾﾝ	1	INC.1-15
-	212T0-50521		CYL-ASSY,LIFT VFM275	ﾘﾌﾄｼﾘﾝﾀﾞｱｯｾﾝ	1	INC.1-15
-	212T0-50501		CYL-ASSY,LIFT VFM300	ﾘﾌﾄｼﾘﾝﾀﾞｱｯｾﾝ	1	INC.1-15
-	212T0-50531		CYL-ASSY,LIFT VFM325	ﾘﾌﾄｼﾘﾝﾀﾞｱｯｾﾝ	1	INC.1-15
-	212T0-50541		CYL-ASSY,LIFT VFM330	ﾘﾌﾄｼﾘﾝﾀﾞｱｯｾﾝ	1	INC.1-15
-	212T0-50551		CYL-ASSY,LIFT VFM350	ﾘﾌﾄｼﾘﾝﾀﾞｱｯｾﾝ	1	INC.1-15
-	212T0-50561		CYL-ASSY,LIFT VFM366	ﾘﾌﾄｼﾘﾝﾀﾞｱｯｾﾝ	1	INC.1-15
-	212T0-80561		CYL-ASSY,LIFT VFM370	ﾘﾌﾄｼﾘﾝﾀﾞｱｯｾﾝ	1	INC.1-15
-	212T0-50571		CYL-ASSY,LIFT VFM375	ﾘﾌﾄｼﾘﾝﾀﾞｱｯｾﾝ	1	INC.1-15
-	212T0-50581		CYL-ASSY,LIFT VFM400	ﾘﾌﾄｼﾘﾝﾀﾞｱｯｾﾝ	1	INC.1-15
-	212T0-50591		CYL-ASSY,LIFT VFM425	ﾘﾌﾄｼﾘﾝﾀﾞｱｯｾﾝ	1	INC.1-15
-	212T0-50601		CYL-ASSY,LIFT VFM450	ﾘﾌﾄｼﾘﾝﾀﾞｱｯｾﾝ	1	INC.1-15
-	212T0-50611		CYL-ASSY,LIFT VFM475	ﾘﾌﾄｼﾘﾝﾀﾞｱｯｾﾝ	1	INC.1-15
-	212T0-50621		CYL-ASSY,LIFT VFM500	ﾘﾌﾄｼﾘﾝﾀﾞｱｯｾﾝ	1	INC.1-15
-	212T0-50631		CYL-ASSY,LIFT VFM550	ﾘﾌﾄｼﾘﾝﾀﾞｱｯｾﾝ	1	INC.1-15
-	212T0-50641		CYL-ASSY,LIFT VFM600	ﾘﾌﾄｼﾘﾝﾀﾞｱｯｾﾝ	1	INC.1-15
901	B-B675B-00003	K1	KIT,HEAD	ﾍｯﾄﾞｷｯﾄ	1	INC.3,4
902	B-B675A-00006	K2	KIT,REPAIR	ﾘﾍﾟｱｷｯﾄ	1	INC.5-10,14
1	B-B6717-94101		BODY,CYL VFM200	ﾎﾞﾃﾞｨ	1	
-	B-B6717-94201		BODY,CYL VFM225	ﾎﾞﾃﾞｨ	1	
-	B-B6717-94301		BODY,CYL VFM250	ﾎﾞﾃﾞｨ	1	
-	B-B6717-92601		BODY,CYL VFM270	ﾎﾞﾃﾞｨ	1	
-	B-B6717-92701		BODY,CYL VFM275	ﾎﾞﾃﾞｨ	1	
-	B-B6717-92801		BODY,CYL VFM300	ﾎﾞﾃﾞｨ	1	
-	B-B6717-92901		BODY,CYL VFM325	ﾎﾞﾃﾞｨ	1	
-	B-B6717-93001		BODY,CYL VFM330	ﾎﾞﾃﾞｨ	1	
-	B-B6717-93101		BODY,CYL VFM350	ﾎﾞﾃﾞｨ	1	
-	B-B6717-93201		BODY,CYL VFM366	ﾎﾞﾃﾞｨ	1	
-	B-B6717-88201		BODY,CYL VFM370	ﾎﾞﾃﾞｨ	1	
-	B-B6717-93301		BODY,CYL VFM375	ﾎﾞﾃﾞｨ	1	
-	B-B6717-93401		BODY,CYL VFM400	ﾎﾞﾃﾞｨ	1	
-	B-B6717-93501		BODY,CYL VFM425	ﾎﾞﾃﾞｨ	1	
-	B-B6717-93601		BODY,CYL VFM450	ﾎﾞﾃﾞｨ	1	
-	B-B6717-93701		BODY,CYL VFM475	ﾎﾞﾃﾞｨ	1	
-	B-B6717-93801		BODY,CYL VFM500	ﾎﾞﾃﾞｨ	1	
-	B-B6717-93901		BODY,CYL VFM550	ﾎﾞﾃﾞｨ	1	
-	B-B6717-94001		BODY,CYL VFM600	ﾎﾞﾃﾞｨ	1	
2	B-B6717-94102		ROD VFM200	ﾛｯﾄﾞ	1	
-	B-B6717-94202		ROD VFM225	ﾛｯﾄﾞ	1	
-	B-B6717-94302		ROD VFM250	ﾛｯﾄﾞ	1	
-	B-B6717-92602		ROD VFM270	ﾛｯﾄﾞ	1	
-	B-B6717-92702		ROD VFM275	ﾛｯﾄﾞ	1	
-	B-B6717-92802		ROD VFM300	ﾛｯﾄﾞ	1	
-	B-B6717-92902		ROD VFM325	ﾛｯﾄﾞ	1	
-	B-B6717-93002		ROD VFM330	ﾛｯﾄﾞ	1	
-	B-B6717-93102		ROD VFM350	ﾛｯﾄﾞ	1	
-	B-B6717-93202		ROD VFM366	ﾛｯﾄﾞ	1	

FIG.168 LIFT CYLINDER (FRONT) [VFM2N5]

(M7020510) リフトシリンダ(フロント)

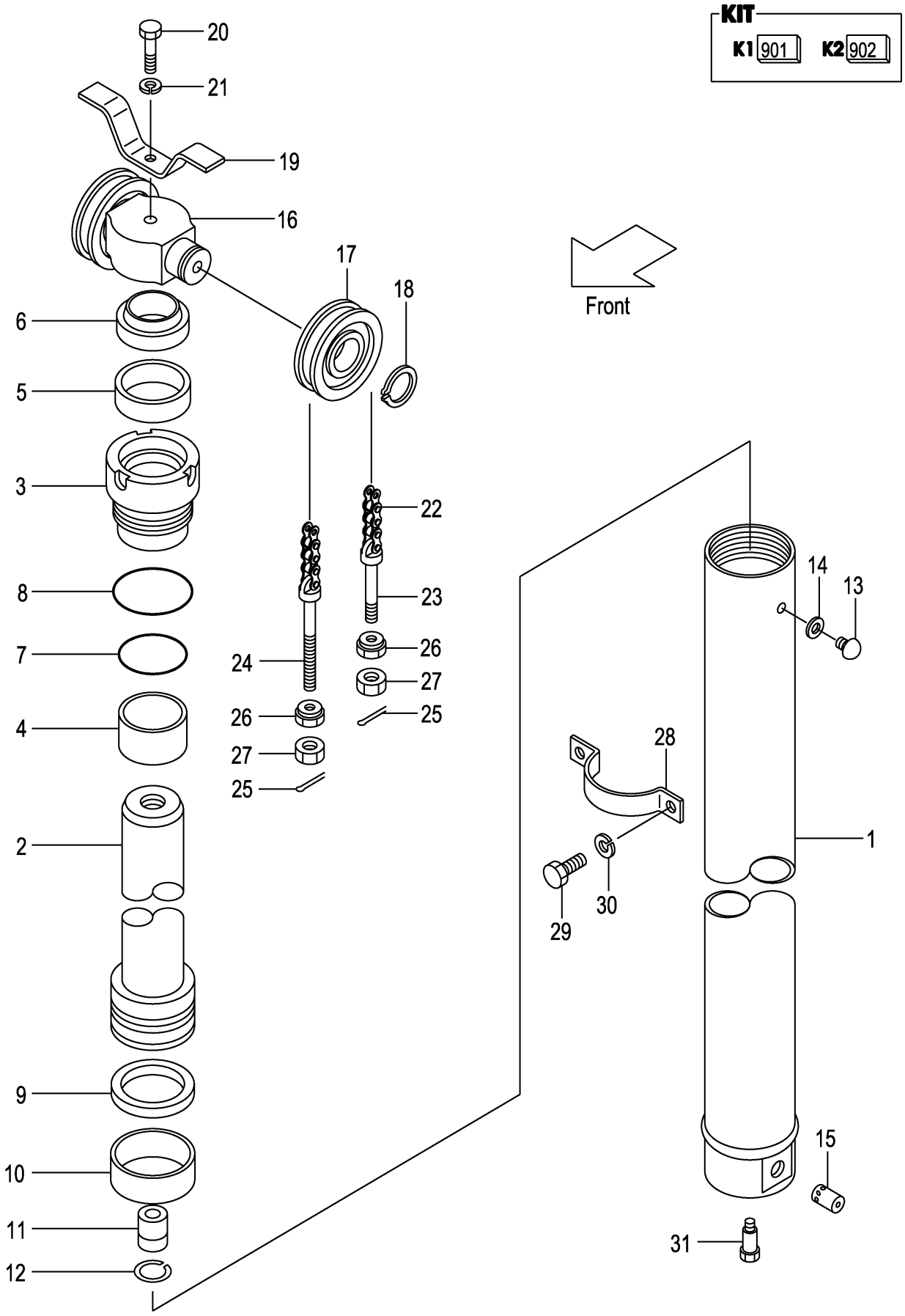

A:VFM2N5(2T)
B:VFM2N5(2.5T)

Item No	Part No.	Mark	Description		Req'd	Remarks : Serial No.
-	B-B6717-88202		ROD VFM370	ﾛｯﾄﾞ	1	
-	B-B6717-93302		ROD VFM375	ﾛｯﾄﾞ	1	
-	B-B6717-93402		ROD VFM400	ﾛｯﾄﾞ	1	
-	B-B6717-93502		ROD VFM425	ﾛｯﾄﾞ	1	
-	B-B6717-93602		ROD VFM450	ﾛｯﾄﾞ	1	
-	B-B6717-93702		ROD VFM475	ﾛｯﾄﾞ	1	
-	B-B6717-93802		ROD VFM500	ﾛｯﾄﾞ	1	
-	B-B6717-93902		ROD VFM550	ﾛｯﾄﾞ	1	
-	B-B6717-94002		ROD VFM600	ﾛｯﾄﾞ	1	
3	B-B6121-75007	*	HEAD	ﾍｯﾄﾞ	1	
4	B-30131-55009	*	BUSHING	ﾌﾞｯｼﾝｸﾞ	1	
5	B-30961-55013	*	U-RING	Uﾘﾝｸﾞ	1	
6	B-30191-55050	*	RING,WIPER	ﾘﾝｸﾞ	1	
7	B-95123-07000	*	O-RING	Oﾘﾝｸﾞ	1	
8	B-95151-07500	*	O-RING	Oﾘﾝｸﾞ	1	
9	B-B6983-75007	*	RING,SEAL	ﾘﾝｸﾞ	1	
10	B-B6181-75007	*	RING,SLIDE	ﾘﾝｸﾞ	1	
11	B-C4300-22001		VALVE,CHECK	ﾊﾞﾙﾌﾞ	1	
12	B-94721-22101		RING,SNAP	ｽﾅｯﾌﾟﾘﾝｸﾞ	1	
13	B-B6521-90004		PLUG	ﾌﾟﾗｸﾞ	1	
14	B-B6711-00001	*	GASKET	ｶﾞｽｹｯﾄ	1	
15	B-26570-30115		VALVE	ﾊﾞﾙﾌﾞ	1	
16	212T0-82001		HEAD,PISTON	ﾍｯﾄﾞ	1	
17	234A8-43501		SHEEVE	ｼｰﾌﾞ	2	
-	22208-40031		SHEEVE	ｼｰﾌﾞ	2	[FC][FCS35][FCS45][FCS55]
18	02100-00040		RING,SNAP	ｽﾅｯﾌﾟﾘﾝｸﾞ	2	
19	214A0-82681		STOPPER,CHAIN	ｽﾄｯﾊﾟ	1	
20	01100-16070		BOLT	ﾎﾞﾙﾄ	1	
-	01100-16075		BOLT	ﾎﾞﾙﾄ	1	[FC][FCS35][FCS45][FCS55]
21	02010-00016		WASHER	ﾜｯｼｬ	1	
22	22679-45611		CHAIN,LEAF VFM200	ﾁｪｰﾝ	2	
-	22679-45671		CHAIN,LEAF VFM225	ﾁｪｰﾝ	2	
-	22679-45711		CHAIN,LEAF VFM250	ﾁｪｰﾝ	2	
-	22679-45771		CHAIN,LEAF VFM270	ﾁｪｰﾝ	2	
-	22679-45791		CHAIN,LEAF VFM275	ﾁｪｰﾝ	2	
-	22679-45811		CHAIN,LEAF VFM300	ﾁｪｰﾝ	2	
-	22679-45891		CHAIN,LEAF VFM325	ﾁｪｰﾝ	2	
-	22679-45891		CHAIN,LEAF VFM330	ﾁｪｰﾝ	2	
-	22679-45951		CHAIN,LEAF VFM350	ﾁｪｰﾝ	2	
-	22679-45991		CHAIN,LEAF VFM366	ﾁｪｰﾝ	2	
-	22679-46011		CHAIN,LEAF VFM370	ﾁｪｰﾝ	2	
-	22679-46011		CHAIN,LEAF VFM375	ﾁｪｰﾝ	2	
-	22679-46111		CHAIN,LEAF VFM400	ﾁｪｰﾝ	2	
-	22679-46171		CHAIN,LEAF VFM425	ﾁｪｰﾝ	2	
-	22679-46231		CHAIN,LEAF VFM450	ﾁｪｰﾝ	2	
-	22679-46311		CHAIN,LEAF VFM475	ﾁｪｰﾝ	2	
-	22679-46371		CHAIN,LEAF VFM500	ﾁｪｰﾝ	2	
-	22679-46531		CHAIN,LEAF VFM550	ﾁｪｰﾝ	2	
-	22679-46651		CHAIN,LEAF VFM600	ﾁｪｰﾝ	2	
-	09001-10035		CHAIN,ROLLER VFM200	ﾁｪｰﾝ	2	[FC][FCS35][FCS45][FCS55]

FIG.168 LIFT CYLINDER (FRONT) [VFM2N5]

(M7020510) リフトシリンダ(フロント)

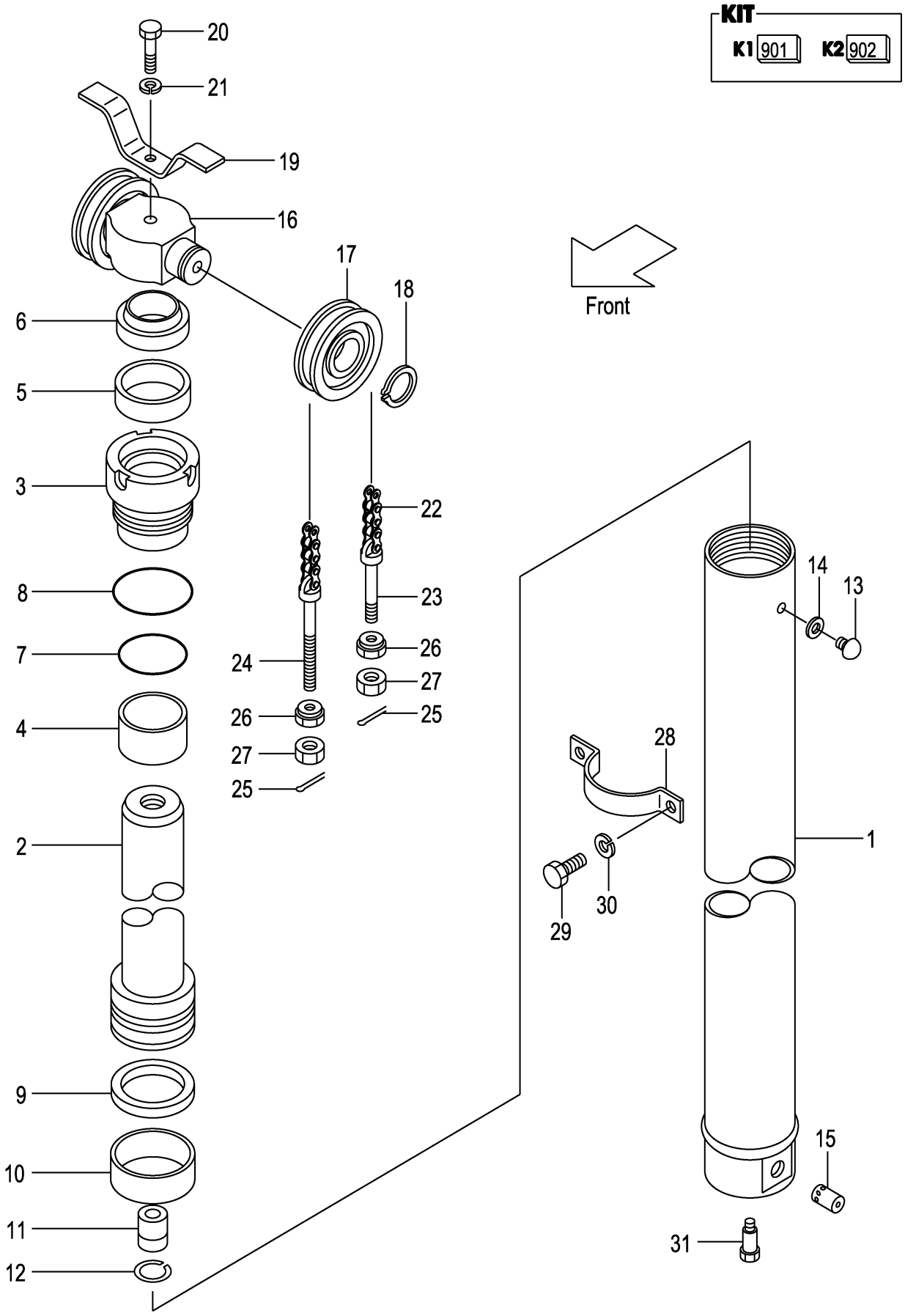

A:VFM2N5(2T)
B:VFM2N5(2.5T)

Item No	Part No.	Mark	Description		Req'd	Remarks : Serial No.
-	09001-10039		CHAIN,ROLLER VFM225	ﾁｪｰﾝ	2	[FC][FCS35][FCS45][FCS55]
-	09001-10041		CHAIN,ROLLER VFM250	ﾁｪｰﾝ	2	[FC][FCS35][FCS45][FCS55]
-	09001-10045		CHAIN,ROLLER VFM270	ﾁｪｰﾝ	2	[FC][FCS35][FCS45][FCS55]
-	09001-10045		CHAIN,ROLLER VFM275	ﾁｪｰﾝ	2	[FC][FCS35][FCS45][FCS55]
-	09001-10047		CHAIN,ROLLER VFM300	ﾁｪｰﾝ	2	[FC][FCS35][FCS45][FCS55]
-	09001-10051		CHAIN,ROLLER VFM320	ﾁｪｰﾝ	2	[FC][FCS35][FCS45][FCS55]
-	09001-10051		CHAIN,ROLLER VFM330	ﾁｪｰﾝ	2	[FC][FCS35][FCS45][FCS55]
-	09001-10055		CHAIN,ROLLER VFM350	ﾁｪｰﾝ	2	[FC][FCS35][FCS45][FCS55]
-	09001-10057		CHAIN,ROLLER VFM366	ﾁｪｰﾝ	2	[FC][FCS35][FCS45][FCS55]
-	09001-10059		CHAIN,ROLLER VFM370	ﾁｪｰﾝ	2	[FC][FCS35][FCS45][FCS55]
-	09001-10059		CHAIN,ROLLER VFM375	ﾁｪｰﾝ	2	[FC][FCS35][FCS45][FCS55]
-	09001-10065		CHAIN,ROLLER VFM400	ﾁｪｰﾝ	2	[FC][FCS35][FCS45][FCS55]
-	09001-10069		CHAIN,ROLLER VFM425	ﾁｪｰﾝ	2	[FC][FCS35][FCS45][FCS55]
-	09001-10073		CHAIN,ROLLER VFM450	ﾁｪｰﾝ	2	[FC][FCS35][FCS45][FCS55]
-	09001-10077		CHAIN,ROLLER VFM475	ﾁｪｰﾝ	2	[FC][FCS35][FCS45][FCS55]
-	09001-10081		CHAIN,ROLLER VFM500	ﾁｪｰﾝ	2	[FC][FCS35][FCS45][FCS55]
-	09001-10089		CHAIN,ROLLER VFM550	ﾁｪｰﾝ	2	[FC][FCS35][FCS45][FCS55]
-	09001-10097		CHAIN,ROLLER VFM600	ﾁｪｰﾝ	2	[FC][FCS35][FCS45][FCS55]
23	23500-82001		PIN,ANCHOR	ﾋﾟﾝ	2	
-	231A0-82001		PIN,ANCHOR	ﾋﾟﾝ	2	[FC][FCS35][FCS45][FCS55]
24	52672-72231		PIN,ANCHOR	ﾋﾟﾝ	2	
-	22218-42111		PIN,ANCHOR	ﾋﾟﾝ	2	[FC][FCS35][FCS45][FCS55]
25	02200-03030		PIN,COTTER	ﾋﾟﾝ	4	
26	22218-40191		NUT	ﾅｯﾄ	4	
27	01402-00018		NUT	ﾅｯﾄ	4	
-	01400-00018		NUT	ﾅｯﾄ	4	[FC][FCS35][FCS45][FCS55]
28	212T0-82101		SUPPORT,CYLINDER	ｻﾎﾟｰﾄ	1	
29	01103-10018		BOLT	ﾎﾞﾙﾄ	2	
30	02011-00010		WASHER	ﾜｯｼｬ	2	
31	214A0-82831		BOLT	ﾎﾞﾙﾄ	1	

FIG.169 LIFT CYLINDER (REAR) [VFM2N5]

(M7020520) リフトシリンダ(リヤー)

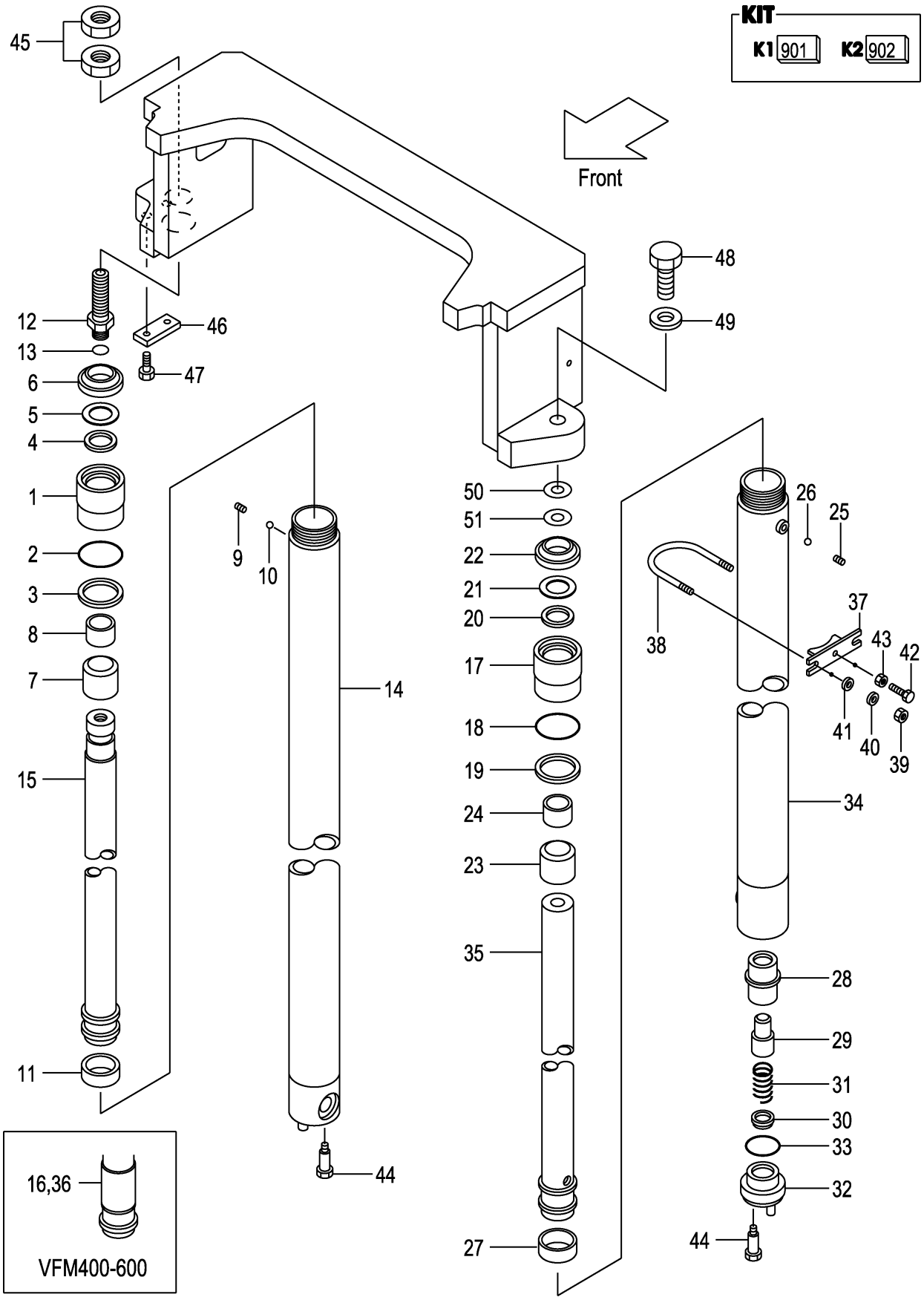

A:VFM2N5(2T)
B:VFM2N5(2.5T)

Item No	Part No.	Mark	Description		Req'd	Remarks : Serial No.
A1	234A0-50211		CYL-ASSY,LIFT,RH VFM200	ﾘﾌﾄｼﾘﾝﾀﾞｱｯｾﾝ	1	INC.1-15
-	234A0-50221		CYL-ASSY,LIFT,RH VFM225	ﾘﾌﾄｼﾘﾝﾀﾞｱｯｾﾝ	1	INC.1-15
-	234A0-51231		CYL-ASSY,LIFT,RH VFM250	ﾘﾌﾄｼﾘﾝﾀﾞｱｯｾﾝ	1	INC.1-15
-	234A0-50241		CYL-ASSY,LIFT,RH VFM270	ﾘﾌﾄｼﾘﾝﾀﾞｱｯｾﾝ	1	INC.1-15
-	234A0-50251		CYL-ASSY,LIFT,RH VFM275	ﾘﾌﾄｼﾘﾝﾀﾞｱｯｾﾝ	1	INC.1-15
-	234A0-50201		CYL-ASSY,LIFT,RH VFM300	ﾘﾌﾄｼﾘﾝﾀﾞｱｯｾﾝ	1	INC.1-15
-	234A0-50261		CYL-ASSY,LIFT,RH VFM325	ﾘﾌﾄｼﾘﾝﾀﾞｱｯｾﾝ	1	INC.1-15
-	234A0-50271		CYL-ASSY,LIFT,RH VFM330	ﾘﾌﾄｼﾘﾝﾀﾞｱｯｾﾝ	1	INC.1-15
-	234A0-50281		CYL-ASSY,LIFT,RH VFM350	ﾘﾌﾄｼﾘﾝﾀﾞｱｯｾﾝ	1	INC.1-15
-	234A0-50291		CYL-ASSY,LIFT,RH VFM366	ﾘﾌﾄｼﾘﾝﾀﾞｱｯｾﾝ	1	INC.1-15
-	234A0-50301		CYL-ASSY,LIFT,RH VFM370	ﾘﾌﾄｼﾘﾝﾀﾞｱｯｾﾝ	1	INC.1-15
-	234A0-50311		CYL-ASSY,LIFT,RH VFM375	ﾘﾌﾄｼﾘﾝﾀﾞｱｯｾﾝ	1	INC.1-15
-	234A0-50321		CYL-ASSY,LIFT,RH VFM400	ﾘﾌﾄｼﾘﾝﾀﾞｱｯｾﾝ	1	INC.1-16
-	234A0-50331		CYL-ASSY,LIFT,RH VFM425	ﾘﾌﾄｼﾘﾝﾀﾞｱｯｾﾝ	1	INC.1-16
-	234A0-50341		CYL-ASSY,LIFT,RH VFM450	ﾘﾌﾄｼﾘﾝﾀﾞｱｯｾﾝ	1	INC.1-16
-	234A0-50351		CYL-ASSY,LIFT,RH VFM475	ﾘﾌﾄｼﾘﾝﾀﾞｱｯｾﾝ	1	INC.1-16
-	234A0-50361		CYL-ASSY,LIFT,RH VFM500	ﾘﾌﾄｼﾘﾝﾀﾞｱｯｾﾝ	1	INC.1-16
-	234A0-50371		CYL-ASSY,LIFT,RH VFM550	ﾘﾌﾄｼﾘﾝﾀﾞｱｯｾﾝ	1	INC.1-16
-	234A0-50381		CYL-ASSY,LIFT,RH VFM600	ﾘﾌﾄｼﾘﾝﾀﾞｱｯｾﾝ	1	INC.1-16
901	214A0-59821	K1	KIT,OVERHAUL	ｵｰﾊﾞﾎｰﾙｷｯﾄ	1	INC.2-6,11
1	234A0-52501		CAP,CYL	ｷｬｯﾌﾟ	1	
2	210F8-42631	*	O-RING	Oﾘﾝｸﾞ	1	
3	214A0-53681	*	RING,BACK-UP	ﾘﾝｸﾞ	1	
4	23650-52851	*	PACKING	ﾊﾟｯｷﾝｸﾞ	1	
5	23650-52861	*	RING,BACK-UP	ﾘﾝｸﾞ	1	
6	27410-53111	*	SEAL,DUST	ｼｰﾙ	1	
7	234A0-52511		SLEEVE	ｽﾘｰﾌﾞ	1	
8	23650-52841		BUSHING	ﾌﾞｯｼﾝｸﾞ	1	
9	234A0-52611		PLUG	ﾌﾟﾗｸﾞ	1	
10	03190-00006		BALL	ﾎﾞｰﾙ	1	
11	22580-53321		WEARING	ｳｪｱﾘﾝｸﾞ	1	

FIG.169 LIFT CYLINDER (REAR) [VFM2N5]

(M7020520) リフトシリンダ(リヤー)

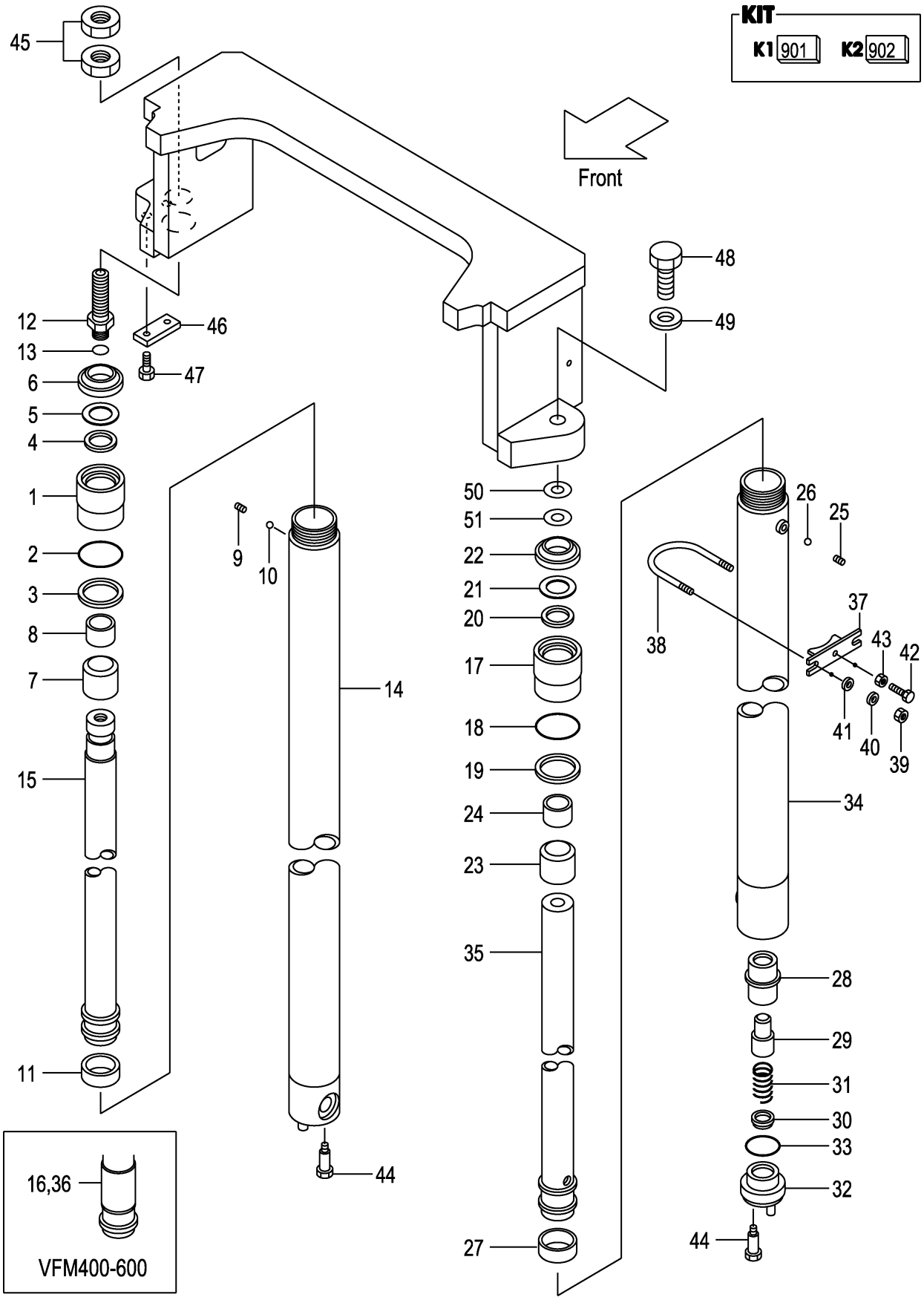

A:VFM2N5(2T)
B:VFM2N5(2.5T)

Item No	Part No.	Mark	Description	Req'd	Remarks : Serial No.
12	214A0-53721		NIPPLE ﾆｯﾌﾟﾙ	1	
13	03320-00180		O-RING Oﾘﾝｸﾞ	1	
14	234A0-50711		BODY,CYL,RH VFM200 ﾎﾞﾃﾞｨ	1	
-	234A0-50721		BODY,CYL,RH VFM225 ﾎﾞﾃﾞｨ	1	
-	234A0-50731		BODY,CYL,RH VFM250 ﾎﾞﾃﾞｨ	1	
-	234A0-50741		BODY,CYL,RH VFM270 ﾎﾞﾃﾞｨ	1	
-	234A0-50751		BODY,CYL,RH VFM275 ﾎﾞﾃﾞｨ	1	
-	234A0-50701		BODY,CYL,RH VFM300 ﾎﾞﾃﾞｨ	1	
-	234A0-50761		BODY,CYL,RH VFM325 ﾎﾞﾃﾞｨ	1	
-	234A0-50771		BODY,CYL,RH VFM330 ﾎﾞﾃﾞｨ	1	
-	234A0-50781		BODY,CYL,RH VFM350 ﾎﾞﾃﾞｨ	1	
-	234A0-50791		BODY,CYL,RH VFM366 ﾎﾞﾃﾞｨ	1	
-	234A0-50801		BODY,CYL,RH VFM370 ﾎﾞﾃﾞｨ	1	
-	234A0-50811		BODY,CYL,RH VFM375 ﾎﾞﾃﾞｨ	1	
-	234A0-50821		BODY,CYL,RH VFM400 ﾎﾞﾃﾞｨ	1	
-	234A0-50831		BODY,CYL,RH VFM425 ﾎﾞﾃﾞｨ	1	
-	234A0-50841		BODY,CYL,RH VFM450 ﾎﾞﾃﾞｨ	1	
-	234A0-50851		BODY,CYL,RH VFM475 ﾎﾞﾃﾞｨ	1	
-	234A0-50861		BODY,CYL,RH VFM500 ﾎﾞﾃﾞｨ	1	
-	234A0-50871		BODY,CYL,RH VFM550 ﾎﾞﾃﾞｨ	1	
-	234A0-50881		BODY,CYL,RH VFM600 ﾎﾞﾃﾞｨ	1	
15	214A0-51711		ROD,PISTON,RH VFM200 ﾛｯﾄﾞ	1	
-	214A0-51721		ROD,PISTON,RH VFM225 ﾛｯﾄﾞ	1	
-	214A0-51731		ROD,PISTON,RH VFM250 ﾛｯﾄﾞ	1	
-	214A0-51741		ROD,PISTON,RH VFM270 ﾛｯﾄﾞ	1	
-	214A0-51751		ROD,PISTON,RH VFM275 ﾛｯﾄﾞ	1	
-	214A0-51701		ROD,PISTON,RH VFM300 ﾛｯﾄﾞ	1	
-	214A0-51761		ROD,PISTON,RH VFM325 ﾛｯﾄﾞ	1	
-	214A0-51771		ROD,PISTON,RH VFM330 ﾛｯﾄﾞ	1	
-	214A0-51781		ROD,PISTON,RH VFM350 ﾛｯﾄﾞ	1	
-	214A0-51791		ROD,PISTON,RH VFM366 ﾛｯﾄﾞ	1	
-	214A0-51801		ROD,PISTON,RH VFM370 ﾛｯﾄﾞ	1	
-	214A0-51811		ROD,PISTON,RH VFM375 ﾛｯﾄﾞ	1	
-	214A0-51821		ROD,PISTON,RH VFM400 ﾛｯﾄﾞ	1	
-	214A0-51831		ROD,PISTON,RH VFM425 ﾛｯﾄﾞ	1	
-	214A0-51841		ROD,PISTON,RH VFM450 ﾛｯﾄﾞ	1	
-	214A0-51851		ROD,PISTON,RH VFM475 ﾛｯﾄﾞ	1	
-	214A0-51861		ROD,PISTON,RH VFM500 ﾛｯﾄﾞ	1	
-	214A0-51871		ROD,PISTON,RH VFM550 ﾛｯﾄﾞ	1	
-	214A0-51881		ROD,PISTON,RH VFM600 ﾛｯﾄﾞ	1	
16	214A0-53901		SPACER ｽﾍﾟｰｻ	1	(VFM400-500)
-	214A0-53901		SPACER ｽﾍﾟｰｻ	2	(VFM550-600)
A2	234A0-50011		CYL-ASSY,LIFT,LH VFM200 ﾘﾌﾄｼﾘﾝﾀﾞｱｯｾﾝ	1	INC.17-35
-	234A0-50021		CYL-ASSY,LIFT,LH VFM225 ﾘﾌﾄｼﾘﾝﾀﾞｱｯｾﾝ	1	INC.17-35
-	234A0-50031		CYL-ASSY,LIFT,LH VFM250 ﾘﾌﾄｼﾘﾝﾀﾞｱｯｾﾝ	1	INC.17-35
-	234A0-50041		CYL-ASSY,LIFT,LH VFM270 ﾘﾌﾄｼﾘﾝﾀﾞｱｯｾﾝ	1	INC.17-35

FIG.169 LIFT CYLINDER (REAR) [VFM2N5]

(M7020520) リフトシリンダ(リヤー)

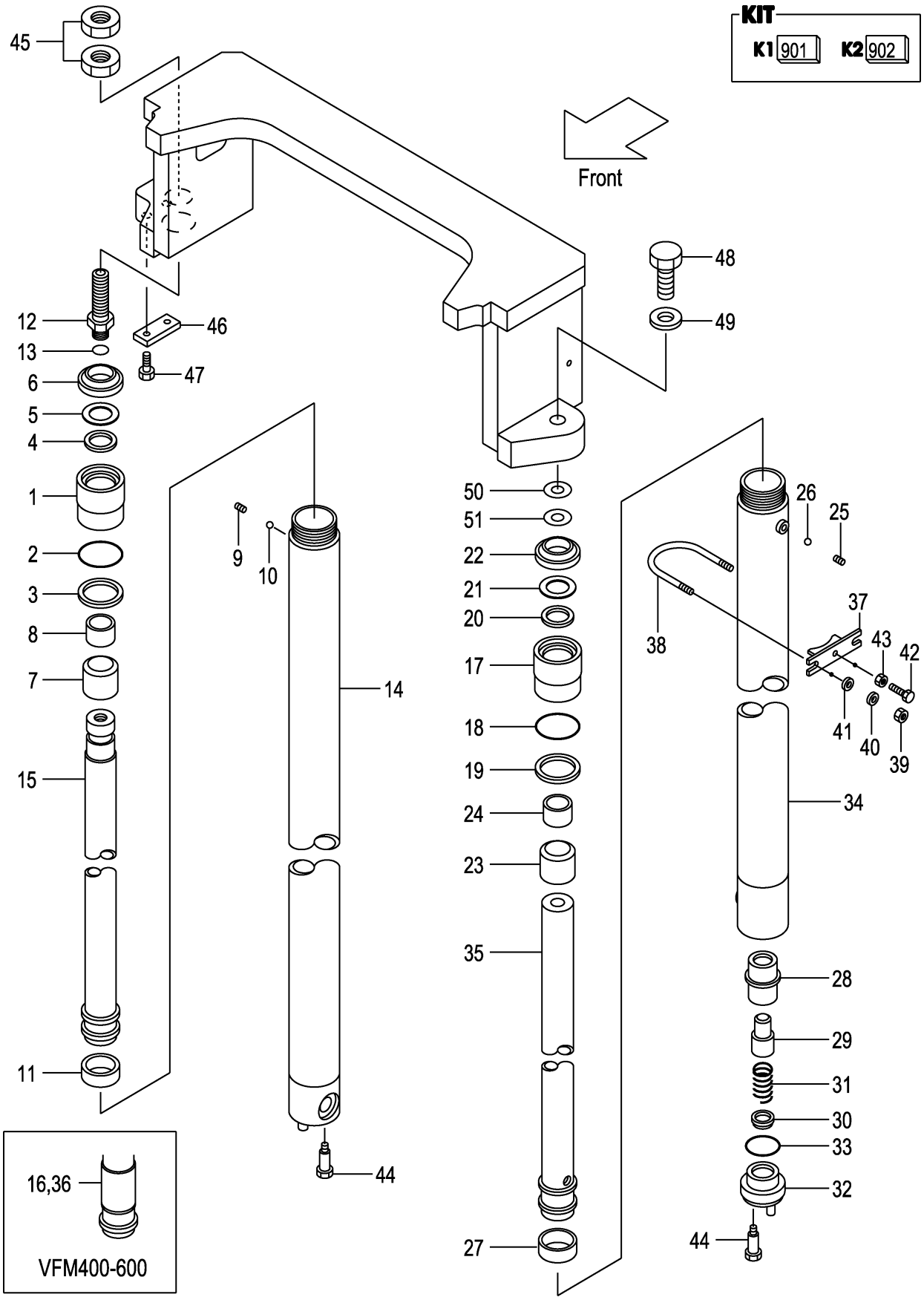

A:VFM2N5(2T)
B:VFM2N5(2.5T)

Item No	Part No.	Mark	Description		Req'd	Remarks : Serial No.
-	234A0-50051		CYL-ASSY,LIFT,LH VFM275	ﾘﾌﾄｼﾘﾝﾀﾞｱｯｾﾝ	1	INC.17-35
-	234A0-50001		CYL-ASSY,LIFT,LH VFM300	ﾘﾌﾄｼﾘﾝﾀﾞｱｯｾﾝ	1	INC.17-35
-	234A0-50061		CYL-ASSY,LIFT,LH VFM325	ﾘﾌﾄｼﾘﾝﾀﾞｱｯｾﾝ	1	INC.17-35
-	234A0-50071		CYL-ASSY,LIFT,LH VFM330	ﾘﾌﾄｼﾘﾝﾀﾞｱｯｾﾝ	1	INC.17-35
-	234A0-50081		CYL-ASSY,LIFT,LH VFM350	ﾘﾌﾄｼﾘﾝﾀﾞｱｯｾﾝ	1	INC.17-35
-	234A0-50091		CYL-ASSY,LIFT,LH VFM366	ﾘﾌﾄｼﾘﾝﾀﾞｱｯｾﾝ	1	INC.17-35
-	234A0-50101		CYL-ASSY,LIFT,LH VFM370	ﾘﾌﾄｼﾘﾝﾀﾞｱｯｾﾝ	1	INC.17-35
-	234A0-50111		CYL-ASSY,LIFT,LH VFM375	ﾘﾌﾄｼﾘﾝﾀﾞｱｯｾﾝ	1	INC.17-35
-	234A0-50121		CYL-ASSY,LIFT,LH VFM400	ﾘﾌﾄｼﾘﾝﾀﾞｱｯｾﾝ	1	INC.17-36
-	234A0-50131		CYL-ASSY,LIFT,LH VFM425	ﾘﾌﾄｼﾘﾝﾀﾞｱｯｾﾝ	1	INC.17-36
-	234A0-50141		CYL-ASSY,LIFT,LH VFM450	ﾘﾌﾄｼﾘﾝﾀﾞｱｯｾﾝ	1	INC.17-36
-	234A0-50151		CYL-ASSY,LIFT,LH VFM475	ﾘﾌﾄｼﾘﾝﾀﾞｱｯｾﾝ	1	INC.17-36
-	234A0-50161		CYL-ASSY,LIFT,LH VFM500	ﾘﾌﾄｼﾘﾝﾀﾞｱｯｾﾝ	1	INC.17-36
-	234A0-50171		CYL-ASSY,LIFT,LH VFM550	ﾘﾌﾄｼﾘﾝﾀﾞｱｯｾﾝ	1	INC.17-36
-	234A0-50181		CYL-ASSY,LIFT,LH VFM600	ﾘﾌﾄｼﾘﾝﾀﾞｱｯｾﾝ	1	INC.17-36
902	214A0-59821	K2	KIT,OVERHAUL	ｵｰﾊﾞﾎｰﾙｷｯﾄ	1	INC.18-22,27,33
17	234A0-52501		CAP,CYL	ｷｬｯﾌﾟ	1	
18	210F8-42631	*	O-RING	Oﾘﾝｸﾞ	1	
19	214A0-53681	*	RING,BACK-UP	ﾘﾝｸﾞ	1	
20	23650-52851	*	PACKING	ﾊﾟｯｷﾝｸﾞ	1	
21	23650-52861	*	RING,BACK-UP	ﾘﾝｸﾞ	1	
22	27410-53111	*	SEAL,DUST	ｼｰﾙ	1	
23	234A0-52511		SLEEVE	ｽﾘｰﾌﾞ	1	
24	23650-52841		BUSHING	ﾌﾞｯｼﾝｸﾞ	1	
25	234A0-52611		PLUG	ﾌﾟﾗｸﾞ	1	
26	03190-00006		BALL	ﾎﾞｰﾙ	1	
27	22580-53321	*	WEARING	ｳｪｱﾘﾝｸﾞ	1	
28	53658-43021		SLEEVE	ｽﾘｰﾌﾞ	1	
29	53658-43011		PISTON	ﾋﾟｽﾄﾝ	1	
30	53658-43001		CHECK	ﾁｪｯｸ	1	
31	53658-43031		SPRING	ｽﾌﾟﾘﾝｸﾞ	1	
32	53658-43041		PLUG	ﾌﾟﾗｸﾞ	1	
33	03320-00340	*	O-RING	Oﾘﾝｸﾞ	1	
34	234A0-50511		BODY,CYL,LH VFM200	ﾎﾞﾃﾞｨ	1	
-	234A0-50521		BODY,CYL,LH VFM225	ﾎﾞﾃﾞｨ	1	

FIG.169 LIFT CYLINDER (REAR) [VFM2N5]

(M7020520) リフトシリンダ(リヤー)

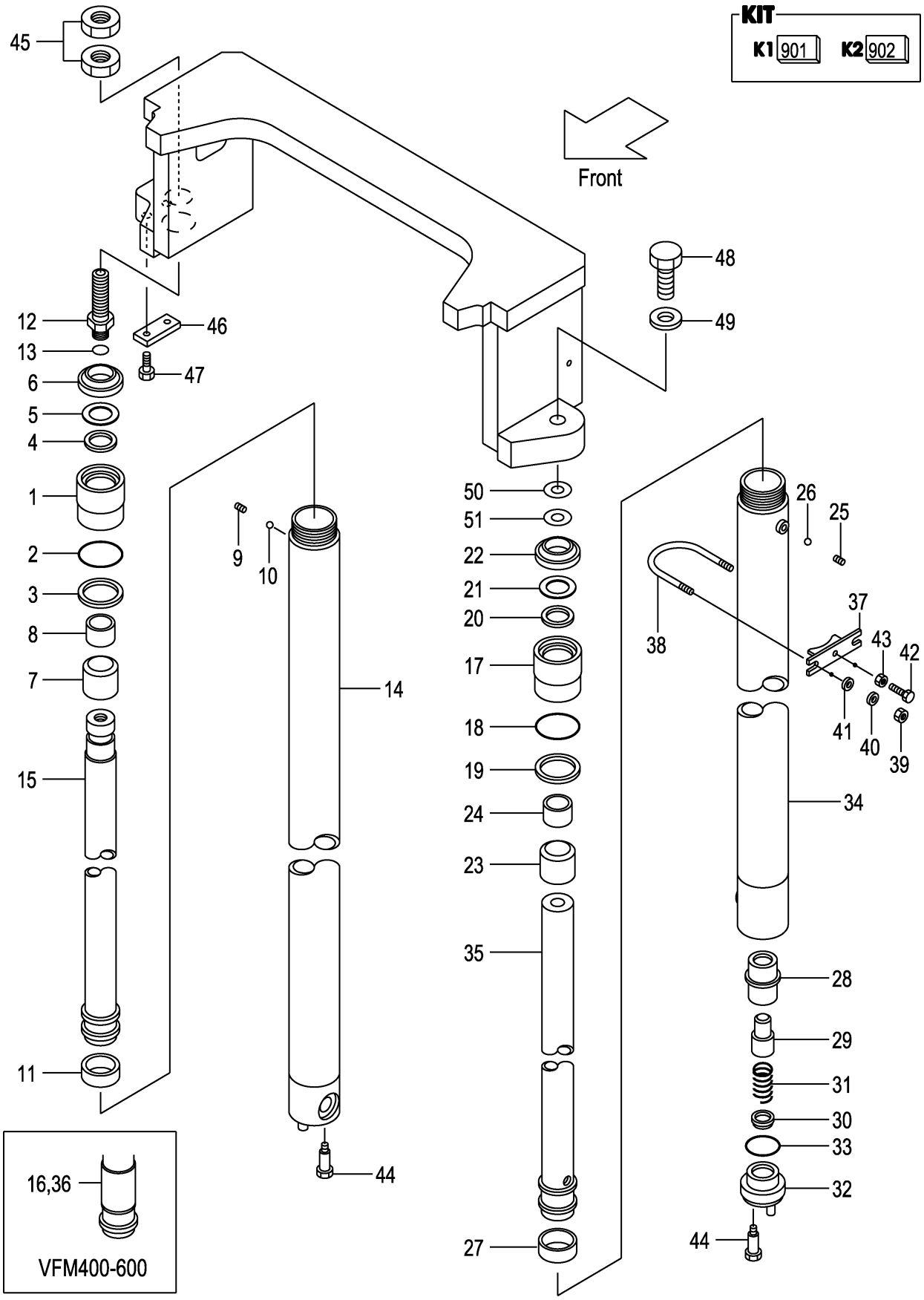

A:VFM2N5(2T)
B:VFM2N5(2.5T)

Item No	Part No.	Mark	Description		Req'd	Remarks : Serial No.
-	234A0-50531		BODY,CYL,LH VFM250	ﾎﾞﾃﾞｨ	1	
-	234A0-50541		BODY,CYL,LH VFM270	ﾎﾞﾃﾞｨ	1	
-	234A0-50551		BODY,CYL,LH VFM275	ﾎﾞﾃﾞｨ	1	
-	234A0-50501		BODY,CYL,LH VFM300	ﾎﾞﾃﾞｨ	1	
-	234A0-50561		BODY,CYL,LH VFM325	ﾎﾞﾃﾞｨ	1	
-	234A0-50571		BODY,CYL,LH VFM330	ﾎﾞﾃﾞｨ	1	
-	234A0-50581		BODY,CYL,LH VFM350	ﾎﾞﾃﾞｨ	1	
-	234A0-50591		BODY,CYL,LH VFM366	ﾎﾞﾃﾞｨ	1	
-	234A0-50601		BODY,CYL,LH VFM370	ﾎﾞﾃﾞｨ	1	
-	234A0-50611		BODY,CYL,LH VFM375	ﾎﾞﾃﾞｨ	1	
-	234A0-50621		BODY,CYL,LH VFM400	ﾎﾞﾃﾞｨ	1	
-	234A0-50631		BODY,CYL,LH VFM425	ﾎﾞﾃﾞｨ	1	
-	234A0-50641		BODY,CYL,LH VFM450	ﾎﾞﾃﾞｨ	1	
-	234A0-50651		BODY,CYL,LH VFM475	ﾎﾞﾃﾞｨ	1	
-	234A0-50661		BODY,CYL,LH VFM500	ﾎﾞﾃﾞｨ	1	
-	234A0-50671		BODY,CYL,LH VFM550	ﾎﾞﾃﾞｨ	1	
-	234A0-50681		BODY,CYL,LH VFM600	ﾎﾞﾃﾞｨ	1	
35	229F0-51211		ROD,PISTON,LH VFM200	ﾛｯﾄﾞ	1	
-	229F0-51221		ROD,PISTON,LH VFM225	ﾛｯﾄﾞ	1	
-	229F0-51231		ROD,PISTON,LH VFM250	ﾛｯﾄﾞ	1	
-	229F0-51241		ROD,PISTON,LH VFM270	ﾛｯﾄﾞ	1	
-	229F0-51251		ROD,PISTON,LH VFM275	ﾛｯﾄﾞ	1	
-	229F0-51201		ROD,PISTON,LH VFM300	ﾛｯﾄﾞ	1	
-	229F0-51261		ROD,PISTON,LH VFM325	ﾛｯﾄﾞ	1	
-	229F0-51271		ROD,PISTON,LH VFM330	ﾛｯﾄﾞ	1	
-	229F0-51281		ROD,PISTON,LH VFM350	ﾛｯﾄﾞ	1	
-	229F0-51291		ROD,PISTON,LH VFM366	ﾛｯﾄﾞ	1	
-	229F0-51301		ROD,PISTON,LH VFM370	ﾛｯﾄﾞ	1	
-	229F0-51311		ROD,PISTON,LH VFM375	ﾛｯﾄﾞ	1	
-	229F0-51321		ROD,PISTON,LH VFM400	ﾛｯﾄﾞ	1	
-	229F0-51331		ROD,PISTON,LH VFM425	ﾛｯﾄﾞ	1	
-	229F0-51341		ROD,PISTON,LH VFM450	ﾛｯﾄﾞ	1	
-	229F0-51351		ROD,PISTON,LH VFM475	ﾛｯﾄﾞ	1	
-	229F0-51361		ROD,PISTON,LH VFM500	ﾛｯﾄﾞ	1	
-	229F0-51371		ROD,PISTON,LH VFM550	ﾛｯﾄﾞ	1	
-	229F0-51381		ROD,PISTON,LH VFM600	ﾛｯﾄﾞ	1	
36	214A0-53901		SPACER	ｽﾍﾟｰｻ	1	(VFM400-500)
-	214A0-53901		SPACER	ｽﾍﾟｰｻ	2	(VFM550-600)
37	22N58-43011		SUPPORT	ｻﾎﾟｰﾄ	2	(VFM200-375)
-	22N58-43011		SUPPORT	ｻﾎﾟｰﾄ	4	(VFM400-600)
38	234A8-42551		U-BOLT	Uﾎﾞﾙﾄ	2	(VFM200-375)
-	234A8-42551		U-BOLT	Uﾎﾞﾙﾄ	4	(VFM400-600)
39	234A8-42561		NUT	ﾅｯﾄ	4	(VFM200-375)
-	234A8-42561		NUT	ﾅｯﾄ	8	(VFM400-600)
40	02010-20010		WASHER	ﾜｯｼｬ	4	(VFM200-375)
-	02010-20010		WASHER	ﾜｯｼｬ	8	(VFM400-600)
41	02000-20010		WASHER	ﾜｯｼｬ	4	(VFM200-375)
-	02000-20010		WASHER	ﾜｯｼｬ	8	(VFM400-600)
42	232A8-42201		BOLT	ﾎﾞﾙﾄ	2	(VFM200-375)
-	232A8-42201		BOLT	ﾎﾞﾙﾄ	4	(VFM400-600)

FIG.169 LIFT CYLINDER (REAR) [VFM2N5]

(M7020520) リフトシリンダ(リヤー)

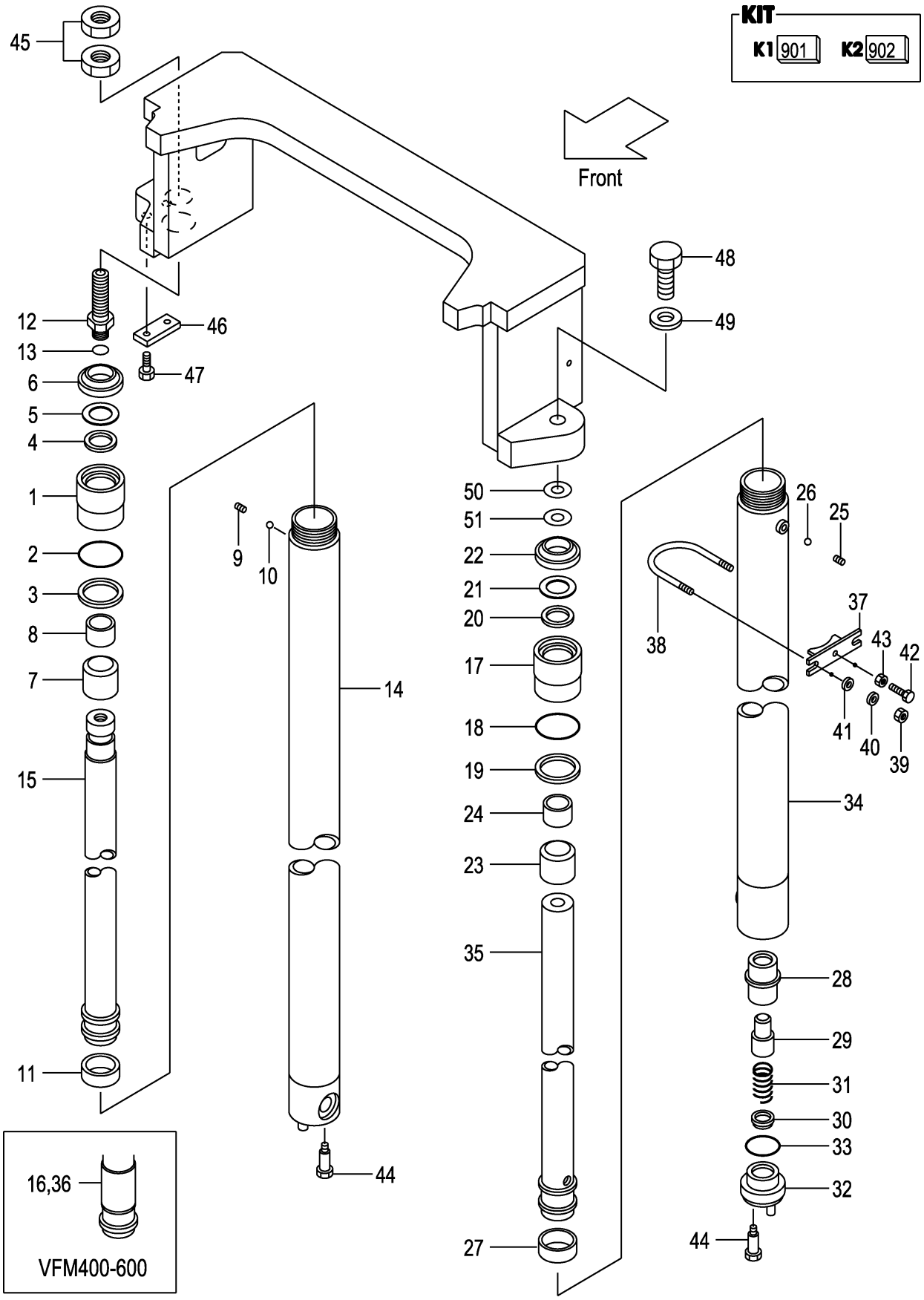

A:VFM2N5(2T)
B:VFM2N5(2.5T)

Item No	Part No.	Mark	Description		Req'd	Remarks : Serial No.
43	234A8-42571		NUT	ﾅｯﾄ	2	(VFM200-375)
-	234A8-42571		NUT	ﾅｯﾄ	4	(VFM400-600)
44	214A8-42661		BOLT	ﾎﾞﾙﾄ	2	
45	24320-52001		NUT	ﾅｯﾄ	2	
46	282M8-32501		PLATE,KEY	ﾌﾟﾚｰﾄ	1	
47	01184-10020		BOLT & WASHER	ﾎﾞﾙﾄ & ﾜｯｼｬ	2	
48	01103-14040		BOLT	ﾎﾞﾙﾄ	1	
49	02011-00014		WASHER	ﾜｯｼｬ	1	
50	23917-42191		SHIM,T-1.0	ｼﾑ	5	
51	22679-43831		SHIM,T-0.2	ｼﾑ	5	

FIG.170 MAST PIPING [VFM2N5]

(M7020530) マストパイピング

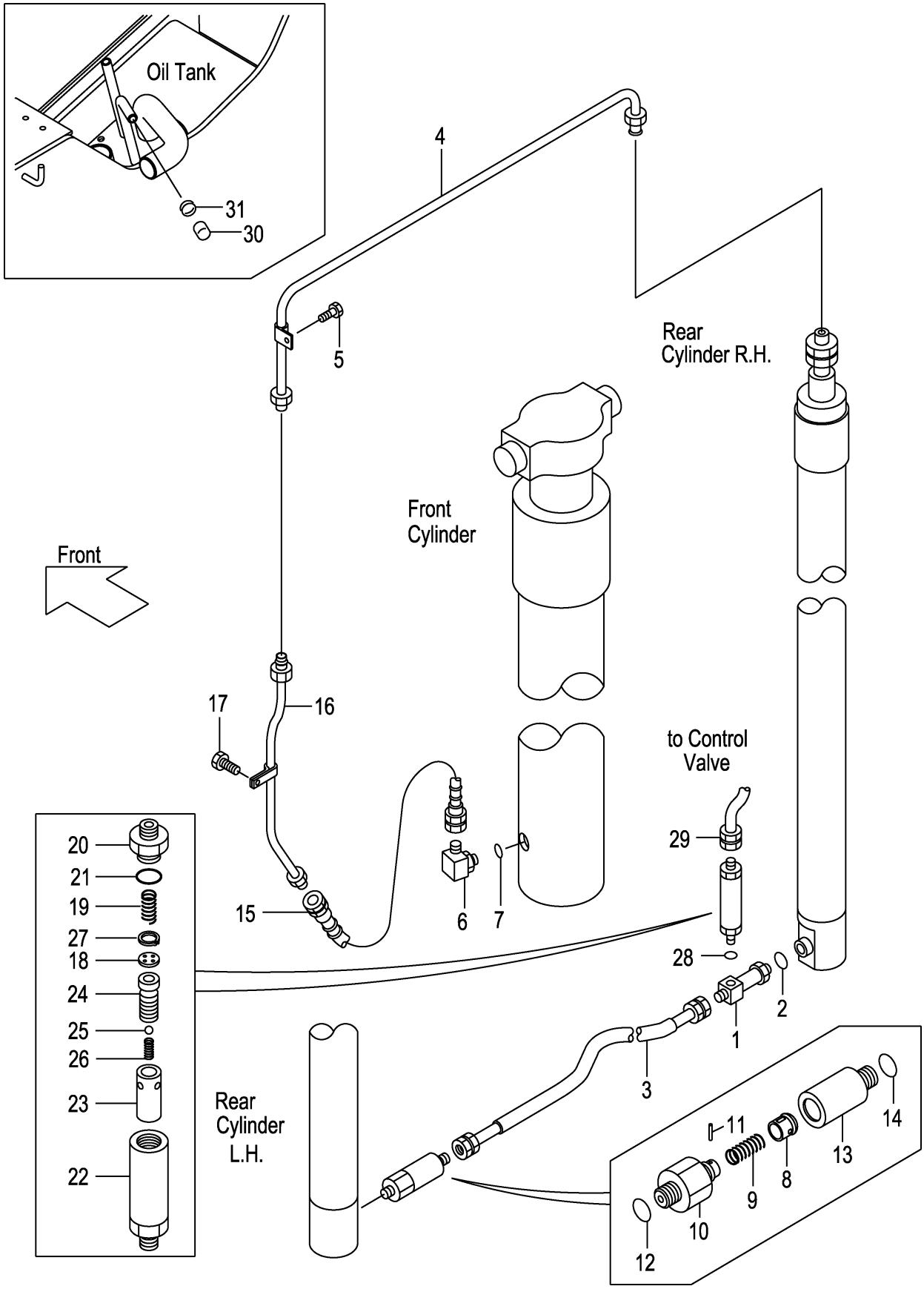

A:VFM2N5(2T)
B:VFM2N5(2.5T)

Item No	Part No.	Mark	Description		Req'd	Remarks : Serial No.
A1	234A8-41101		THREE-WAY-ASSY	ｽﾘｰｳｪｲｱｯｾﾝ	1	INC.1,2
1	NO PART NO.	#	THREE-WAY	ｽﾘｰｳｪｲ	1	
2	03320-00140		O-RING	Oﾘﾝｸﾞ	1	
3	277T0-62071		HOSE	ﾎｰｽ	1	
4	232A0-62001		PIPE	ﾊﾟｲﾌﾟ	1	
5	01183-06016		BOLT	ﾎﾞﾙﾄ	1	
A2	04150-20404		ELBOW-ASSY	ｴﾙﾎﾞｱｯｾﾝ	1	INC.6,7
6	NO PART NO.	#	ELBOW	ｴﾙﾎﾞ	1	
7	03320-00180		O-RING	Oﾘﾝｸﾞ	1	
A3	234A0-62051		VALVE-ASSY,CUT	ｶｯﾄﾊﾞﾙﾌﾞｱｯｾﾝ	1	INC.8-14
A4	234A8-40701		VALVE-SUB-ASSY	ﾊﾞﾙﾌﾞｻﾌﾞｱｯｾﾝ	1	INC.8-12
8	234A8-42602		PISTON	ﾋﾟｽﾄﾝ	1	
9	234A8-42611		SPRING	ｽﾌﾟﾘﾝｸﾞ	1	
10	234A8-42622		NIPPLE	ﾆｯﾌﾟﾙ	1	
11	02270-01014		PIN	ﾋﾟﾝ	1	
12	03320-00140		O-RING	Oﾘﾝｸﾞ	1	
13	234A0-62111		ADAPTER	ｱﾀﾞﾌﾟﾀ	1	
14	03320-00140		O-RING	Oﾘﾝｸﾞ	1	
15	214A0-62151		HOSE	ﾎｰｽ	1	
16	277P0-60301		PIPE VFM200	ﾊﾟｲﾌﾟ	1	
-	277P0-60311		PIPE VFM225	ﾊﾟｲﾌﾟ	1	
-	277P0-60321		PIPE VFM250	ﾊﾟｲﾌﾟ	1	
-	277P0-60331		PIPE VFM270	ﾊﾟｲﾌﾟ	1	
-	277P0-60341		PIPE VFM275	ﾊﾟｲﾌﾟ	1	
-	277P0-60351		PIPE VFM300	ﾊﾟｲﾌﾟ	1	
-	277P0-60361		PIPE VFM325	ﾊﾟｲﾌﾟ	1	
-	277P0-60371		PIPE VFM330	ﾊﾟｲﾌﾟ	1	
-	277P0-60381		PIPE VFM350	ﾊﾟｲﾌﾟ	1	
-	277P0-60391		PIPE VFM366	ﾊﾟｲﾌﾟ	1	
-	277P0-60401		PIPE VFM370	ﾊﾟｲﾌﾟ	1	
-	277P0-60411		PIPE VFM375	ﾊﾟｲﾌﾟ	1	
-	277P0-60421		PIPE VFM400	ﾊﾟｲﾌﾟ	1	
-	277P0-60431		PIPE VFM425	ﾊﾟｲﾌﾟ	1	
-	277P0-60441		PIPE VFM450	ﾊﾟｲﾌﾟ	1	
-	277P0-60451		PIPE VFM475	ﾊﾟｲﾌﾟ	1	
-	277P0-60461		PIPE VFM500	ﾊﾟｲﾌﾟ	1	
-	277P0-60471		PIPE VFM550	ﾊﾟｲﾌﾟ	1	
-	277P0-60481		PIPE VFM600	ﾊﾟｲﾌﾟ	1	
17	01183-06016		BOLT	ﾎﾞﾙﾄ	1	
A5	234A8-41001		REGULATOR-ASSY,FLOW	ﾌﾛｰﾚｷﾞｭﾚｰﾀｱｯｾﾝ	1	INC.18-27
18	NO PART NO.	#	PLATE	ﾌﾟﾚｰﾄ	1	
19	27979-43101		SPRING	ｽﾌﾟﾘﾝｸﾞ	1	
20	NO PART NO.	#	NIPPLE	ﾆｯﾌﾟﾙ	1	
21	03300-00280		O-RING	Oﾘﾝｸﾞ	1	
22	NO PART NO.	#	CASE	ｹｰｽ	1	
23	NO PART NO.	#	SLEEVE	ｽﾘｰﾌﾞ	1	
24	NO PART NO.	#	PISTON	ﾋﾟｽﾄﾝ	1	
25	24459-42951		BALL,NYLON	ﾎﾞｰﾙ	1	
26	214A8-44151		SPRING	ｽﾌﾟﾘﾝｸﾞ	1	
27	02110-00018		RING,SNAP	ｽﾅｯﾌﾟﾘﾝｸﾞ	1	

FIG.170 MAST PIPING [VFM2N5]

(M7020530) マストパイピング

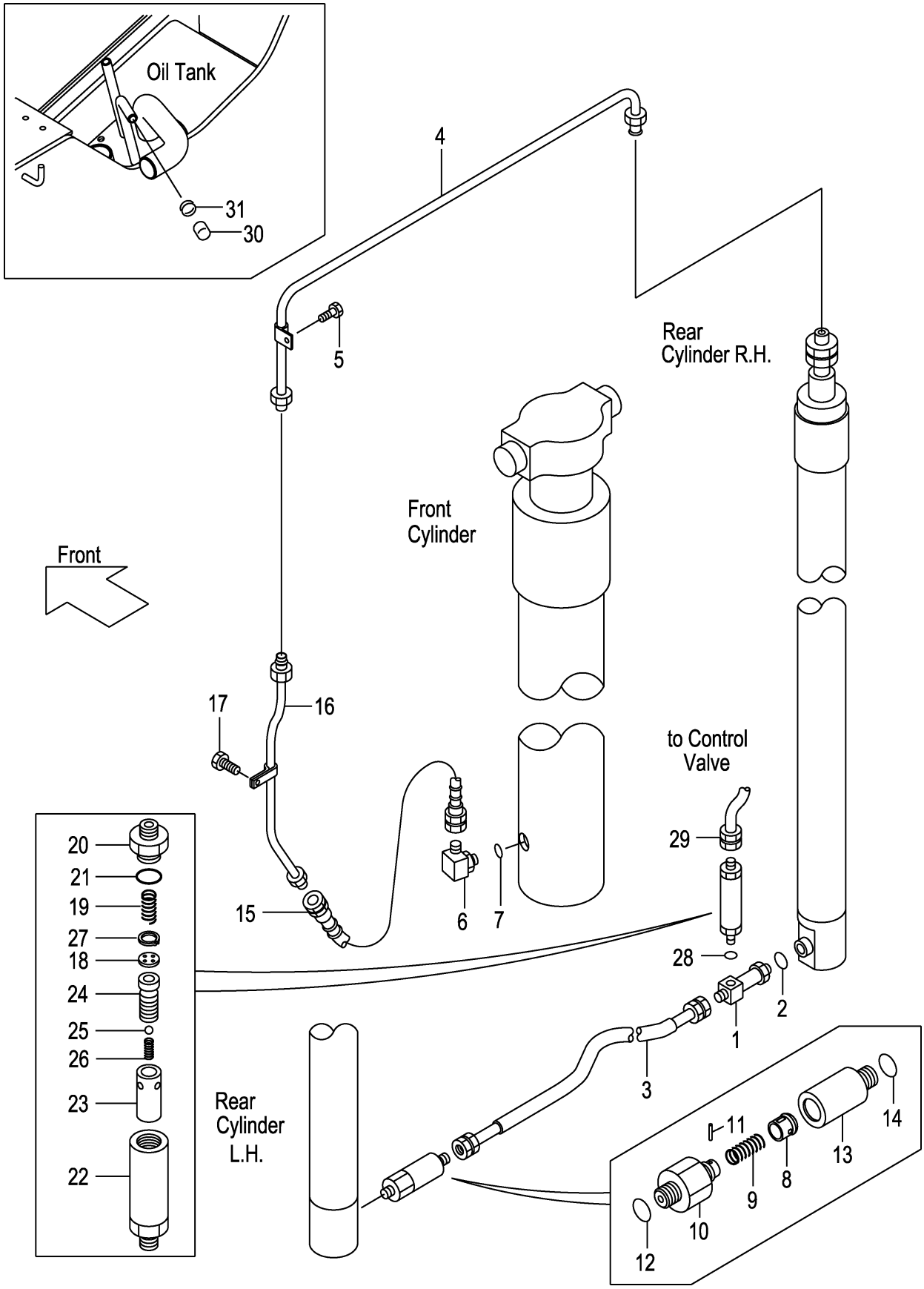

A:VFM2N5(2T)
B:VFM2N5(2.5T)

Item No	Part No.	Mark	Description		Req'd	Remarks : Serial No.
28	03320-00180		O-RING	Oﾘﾝｸﾞ	1	
29	234A8-02101		HOSE	ﾎｰｽ	1	
30	55593-62551		CAP	ｷｬｯﾌﾟ	1	
31	04914-00019		CLIP	ｸﾘｯﾌﾟ	1	

M E M O

M E M O

FIG.171 FORK [VFHM2N5]

(M7028160) フォーク

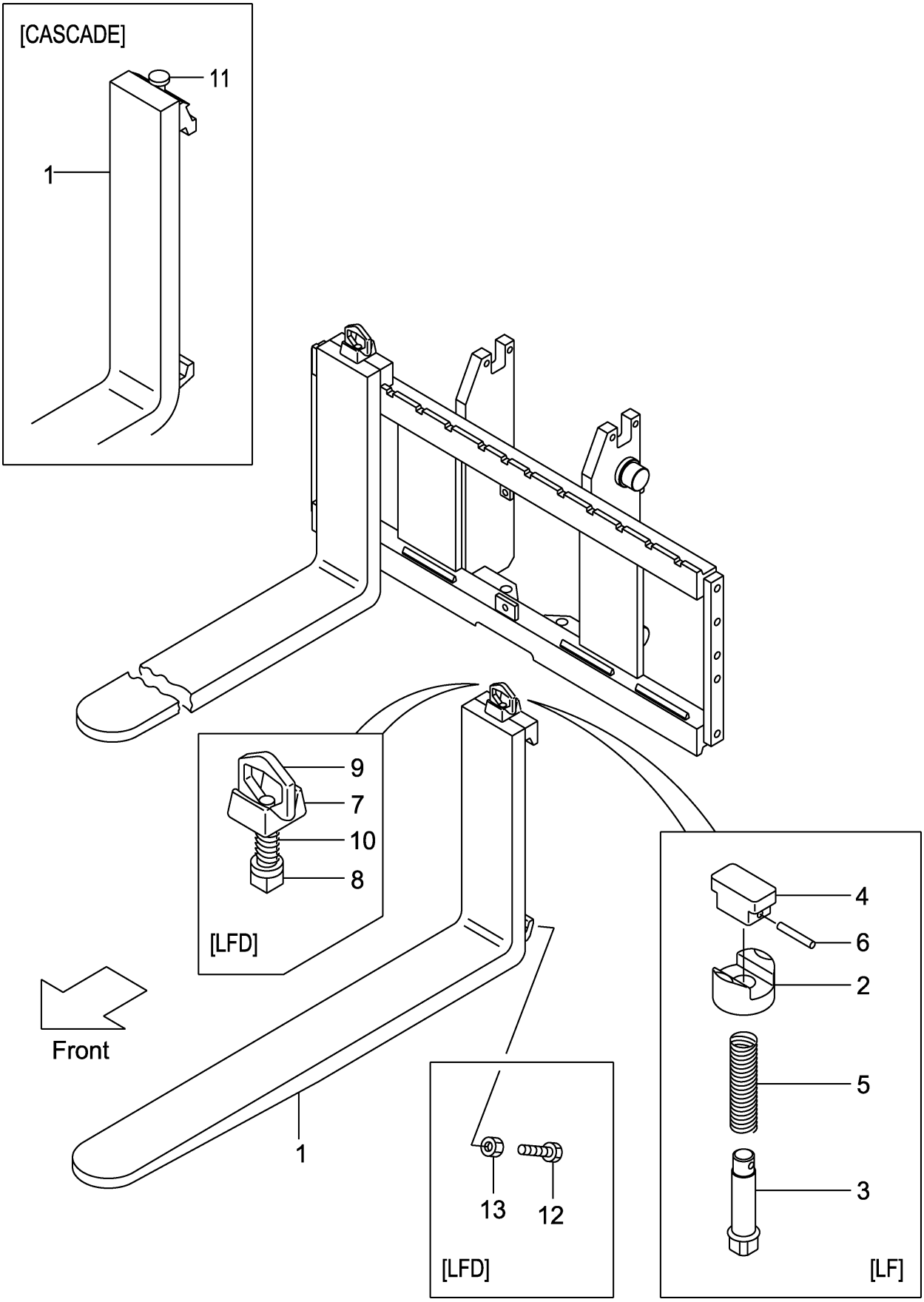

A:VFHM2N5(2T)
B:VFHM2N5(2.5T)

Item No	Part No.	Mark	Description		Req'd	Remarks : Serial No.
1	231A8-10101		FORK	ﾌｫｰｸ	2	A
						(L=920) INC.2-6
-	214A8-10512		FORK	ﾌｫｰｸ	2	B
						(L=1070) INC.2-6
-	231A8-10171		FORK	ﾌｫｰｸ	2	A
						[LF090] INC.2-6
-	231F8-10571		FORK	ﾌｫｰｸ	2	B
						[LF090] INC.2-6
-	231A8-10101		FORK	ﾌｫｰｸ	2	A
						[LF092] INC.2-6
-	231F8-10501		FORK	ﾌｫｰｸ	2	B
						[LF092] INC.2-6
-	214A8-10582		FORK	ﾌｫｰｸ	2	[LF100] INC.2-6
-	214A8-10512		FORK	ﾌｫｰｸ	2	[EX][LF107] INC.2-6
-	214A8-10592		FORK	ﾌｫｰｸ	2	[LF110] INC.2-6
-	214A8-10602		FORK	ﾌｫｰｸ	2	[LF120] INC.2-6
-	214A8-10522		FORK	ﾌｫｰｸ	2	[LF122] INC.2-6
-	214A8-10612		FORK	ﾌｫｰｸ	2	[LF130] INC.2-6
-	214A8-10532		FORK	ﾌｫｰｸ	2	[LF137] INC.2-6
-	214A8-10622		FORK	ﾌｫｰｸ	2	[LF140] INC.2-6
-	214A8-10632		FORK	ﾌｫｰｸ	2	[LF150] INC.2-6
-	214A8-10542		FORK	ﾌｫｰｸ	2	[LF152] INC.2-6
-	214A8-10642		FORK	ﾌｫｰｸ	2	[LF160] INC.2-6
-	214A8-10552		FORK	ﾌｫｰｸ	2	[LF167] INC.2-6
-	214A8-10653		FORK	ﾌｫｰｸ	2	[LF170] INC.2-6
-	214A8-10663		FORK	ﾌｫｰｸ	2	[LF180] INC.2-6
-	214A8-10563		FORK	ﾌｫｰｸ	2	[LF182] INC.2-6
-	214A8-10673		FORK	ﾌｫｰｸ	2	[LF190] INC.2-6
-	214A8-10683		FORK	ﾌｫｰｸ	2	[LF200] INC.2-6
-	234A8-10571		FORK	ﾌｫｰｸ	2	[LFD090] INC.7-10
-	234A8-10501		FORK	ﾌｫｰｸ	2	[LFD092] INC.7-10
-	234A8-10581		FORK	ﾌｫｰｸ	2	[LFD100] INC.7-10
-	234A8-10511		FORK	ﾌｫｰｸ	2	[LFD107] INC.7-10
-	234A8-10591		FORK	ﾌｫｰｸ	2	[LFD110] INC.7-10
-	234A8-10601		FORK	ﾌｫｰｸ	2	[LFD120] INC.7-10
-	234A8-10521		FORK	ﾌｫｰｸ	2	[LFD122] INC.7-10
-	234A8-10611		FORK	ﾌｫｰｸ	2	[LFD130] INC.7-10
-	234A8-10531		FORK	ﾌｫｰｸ	2	[LFD137] INC.7-10
-	234A8-10621		FORK	ﾌｫｰｸ	2	[LFD140] INC.7-10
-	234A8-10631		FORK	ﾌｫｰｸ	2	[LFD150] INC.7-10
-	234A8-10541		FORK	ﾌｫｰｸ	2	[LFD152] INC.7-10
-	234A8-10641		FORK	ﾌｫｰｸ	2	[LFD160] INC.7-10
-	234A8-10551		FORK	ﾌｫｰｸ	2	[LFD167] INC.7-10
-	234A8-10652		FORK	ﾌｫｰｸ	2	[LFD170] INC.7-10
-	234A8-10662		FORK	ﾌｫｰｸ	2	[LFD180] INC.7-10
-	234A8-10562		FORK	ﾌｫｰｸ	2	[LFD182] INC.7-10
-	234A8-10672		FORK	ﾌｫｰｸ	2	[LFD190] INC.7-10
-	234A8-10682		FORK	ﾌｫｰｸ	2	[LFD200] INC.7-10
-	22N58-10501		FORK	ﾌｫｰｸ	2	[LF092/CASCADE] INC.11
-	22N58-10511		FORK	ﾌｫｰｸ	2	[LF107/CASCADE] INC.11

FIG.171 FORK [VFHM2N5]

(M7028160) フォーク

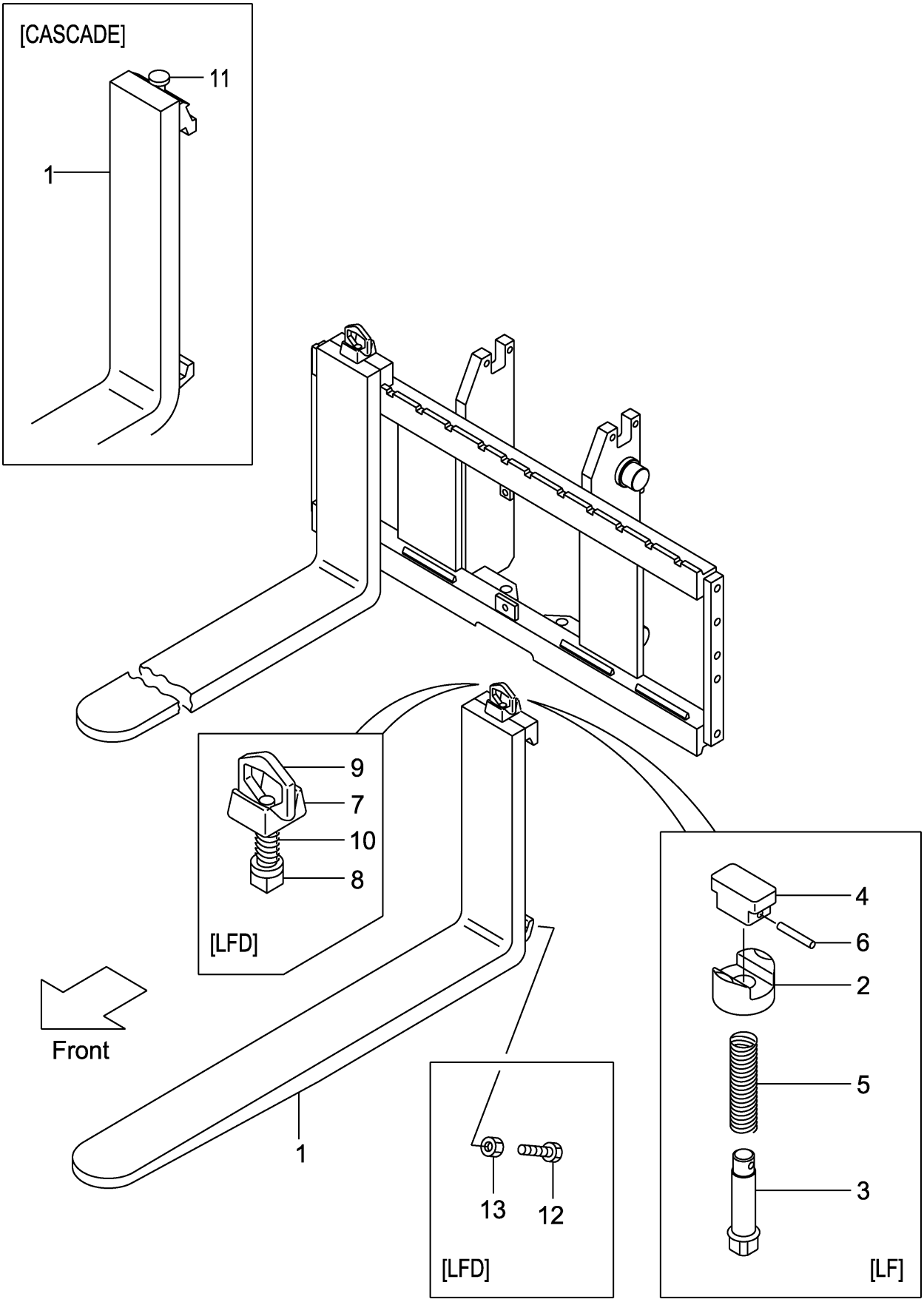

A:VFHM2N5(2T)
B:VFHM2N5(2.5T)

Item No	Part No.	Mark	Description		Req'd	Remarks : Serial No.
-	22N58-10521		FORK	ﾌｫｰｸ	2	[LF122/CASCADE] INC.11
2	216G8-12921		HOLDER	ﾎﾙﾀﾞ	2	[LF]
3	231A8-12001		PIN	ﾋﾟﾝ	2	[LF]
4	231A8-12011		KNOB	ﾉﾌﾞ	2	[LF]
5	231A8-12021		SPRING	ｽﾌﾟﾘﾝｸﾞ	2	[LF]
6	231A8-12031		PIN,SPRING	ﾋﾟﾝ	2	[LF]
A1	214A8-11001		STOPPER-ASSY,FORK	ﾌｫｰｸｽﾄｯﾊﾟｱｯｾﾝ	2	[LFD] INC.7-10
7	214A8-12001		HEAD	ﾍｯﾄﾞ	2	[LFD]
8	214A8-12011		STOPPER	ｽﾄｯﾊﾟ	2	[LFD]
9	214A8-12021		HANDLE	ﾊﾝﾄﾞﾙ	2	[LFD]
10	214A8-12031		SPRING	ｽﾌﾟﾘﾝｸﾞ	2	[LFD]
11	W-K2PK-M		KIT,PIN,STOPPER	ｽｯﾄﾊﾟﾋﾟﾝｷｯﾄ	2	[CASCADE]
12	216G8-12101		BOLT	ﾎﾞﾙﾄ	4	[LFD]
13	01402-00010		NUT	ﾅｯﾄ	4	[LFD]

M E M O

M E M O

FIG.172 LIFT BRACKET [VFHM2N5]

(M7020910) ﾘﾌﾄﾌﾞﾗｹｯﾄ

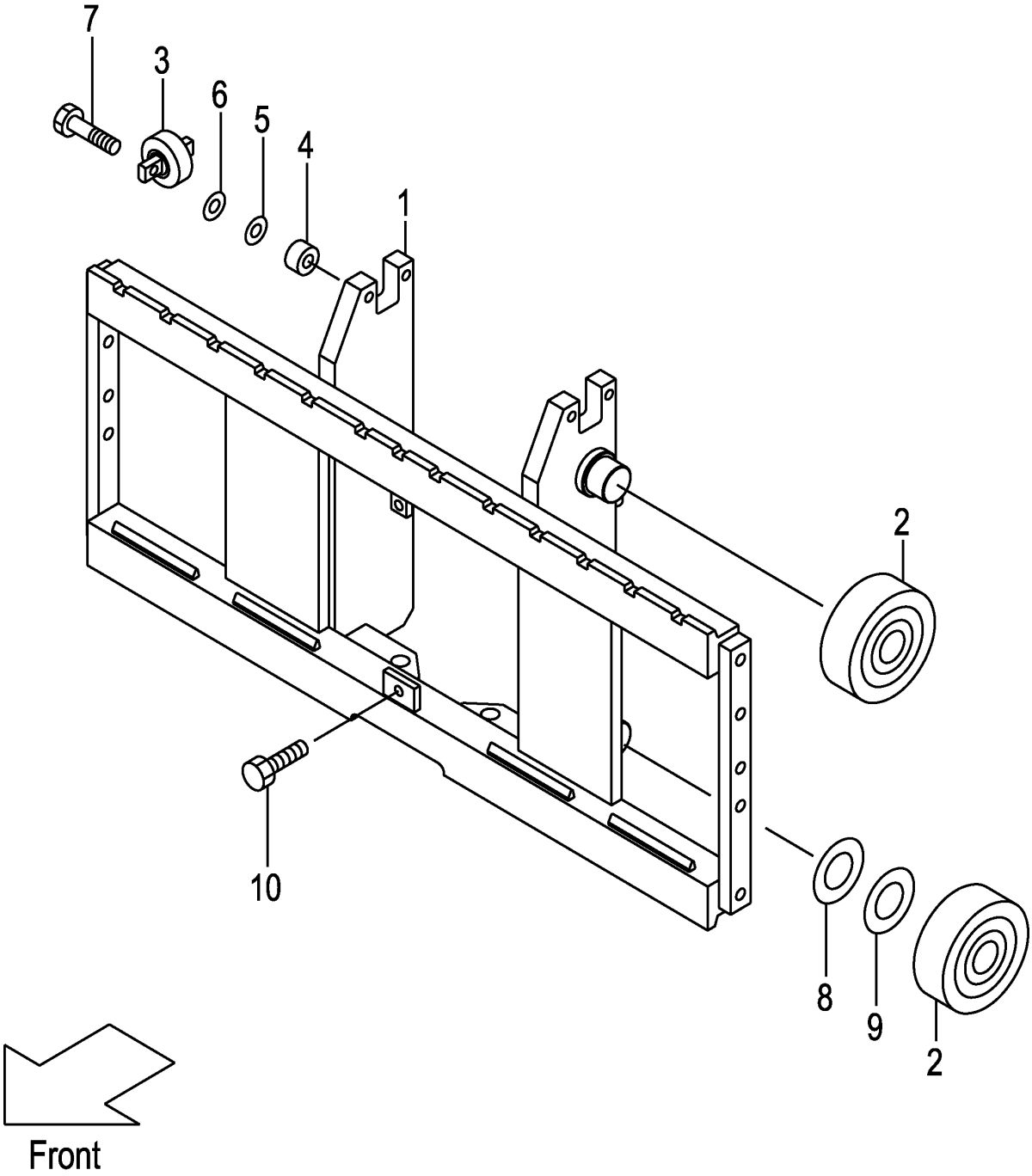

A:VFHM2N5(2T)
B:VFHM2N5(2.5T)

Item No	Part No.	Mark	Description		Req'd	Remarks : Serial No.
1	22N50-90101		BRACKET,LIFT	ﾌﾞﾗｹｯﾄ	1	
-	52N51-61301		BRACKET,LIFT	ﾌﾞﾗｹｯﾄ	1	[WFY110][WFY114][WFY127] [WFY135][WFY138]
-	52N51-61311		BRACKET,LIFT(L)	ﾌﾞﾗｹｯﾄ	1	[WFY135][WFY138][WFY145] [WFY146][WFY154][WFY180]
2	277P8-22051		ROLLER,END,119.0	ﾛｰﾗ	4	
-	577P3-74001		ROLLER,END,119.0	ﾛｰﾗ	4	[FC][CS35][FCS35][FCS45] [FCS55]
-	277P8-22061		ROLLER,END,119.5	ﾛｰﾗ	(4)	
-	577P3-74011		ROLLER,END,119.5	ﾛｰﾗ	(4)	[FC][CS35][FCS35][FCS45] [FCS55]
3	22N58-32701		ROLLER,SIDE	ﾛｰﾗ	2	
-	52N53-74001		ROLLER,SIDE	ﾛｰﾗ	2	[FC][CS35][FCS35][FCS45] [FCS55]
4	22N58-32711		SPACER	ｽﾍﾟｰｻ	4	
5	22018-30261		SHIM	ｼﾑ	4	
6	22018-30121		SHIM	ｼﾑ	4	
7	01103-10045		BOLT	ﾎﾞﾙﾄ	4	
8	277P8-22071		SHIM,T-0.5	ｼﾑ	5	
9	277P8-22081		SHIM,T-1.0	ｼﾑ	5	
10	01184-12025		BOLT & WASHER	ﾎﾞﾙﾄ & ﾜｯｼｬ	1	
11	214A0-93001	+	CHART,CAPACITY	ﾁｬｰﾄ	1	A [VFHM360-500]
-	214A0-93011	+	CHART,CAPACITY	ﾁｬｰﾄ	1	A [VFHM540-750]
-	214A0-93201	+	CHART,CAPACITY	ﾁｬｰﾄ	1	B [VFHM360-500]
-	214A0-93211	+	CHART,CAPACITY	ﾁｬｰﾄ	1	B [VFHM540-750]
-	214A0-93031	+	CHART,CAPACITY	ﾁｬｰﾄ	1	A [VFHM360-500/EXA]
-	214A0-93041	+	CHART,CAPACITY	ﾁｬｰﾄ	1	A [VFHM540-750/EXA]
-	214A0-93231	+	CHART,CAPACITY	ﾁｬｰﾄ	1	B [VFHM360-500/EXA]
-	214A0-93241	+	CHART,CAPACITY	ﾁｬｰﾄ	1	B [VFHM540-750/EXA]
-	514A3-82301	+	CHART,CAPACITY	ﾁｬｰﾄ	1	[EXB][EXC][EXE][EXN]
-	514A3-82321	+	CHART,CAPACITY	ﾁｬｰﾄ	1	[EXD]
-	524T3-84031	+	CHART,CAPACITY	ﾁｬｰﾄ	1	[EXR]
-	63110-18921	+	CHART,CAPACITY	ﾁｬｰﾄ	1	[EXB/CNP]
-	514A3-82341	+	CHART,CAPACITY	ﾁｬｰﾄ	1	[EXB/FNP][EXE/FNP][EXEEC/FNP]
-	514A3-82331	+	CHART,CAPACITY	ﾁｬｰﾄ	1	[EXB/SNP][EXE/SNP][EXEEC/SNP]
-	514A3-82361	+	CHART,CAPACITY	ﾁｬｰﾄ	1	[EXEEC/DNP][EXNEC/DNP]
-	514A3-82381	+	CHART,CAPACITY	ﾁｬｰﾄ	1	[EXEEC/GNP]
-	514A3-82371	+	CHART,CAPACITY	ﾁｬｰﾄ	1	[EXEEC/INP]
-	514A3-82351	+	CHART,CAPACITY	ﾁｬｰﾄ	1	[EXEEC/ONP]
-	514A3-82391	+	CHART,CAPACITY	ﾁｬｰﾄ	1	[EXEEC/PNP]
-	529F3-82101	+	CHART,CAPACITY	ﾁｬｰﾄ	1	[EXNEC/FINP]
-	529F3-82111	+	CHART,CAPACITY	ﾁｬｰﾄ	1	[EXNEC/SENP]

FIG.172 LIFT BRACKET [VFHM2N5]

(M7020910) ﾘﾌﾄﾌﾞﾗｹｯﾄ

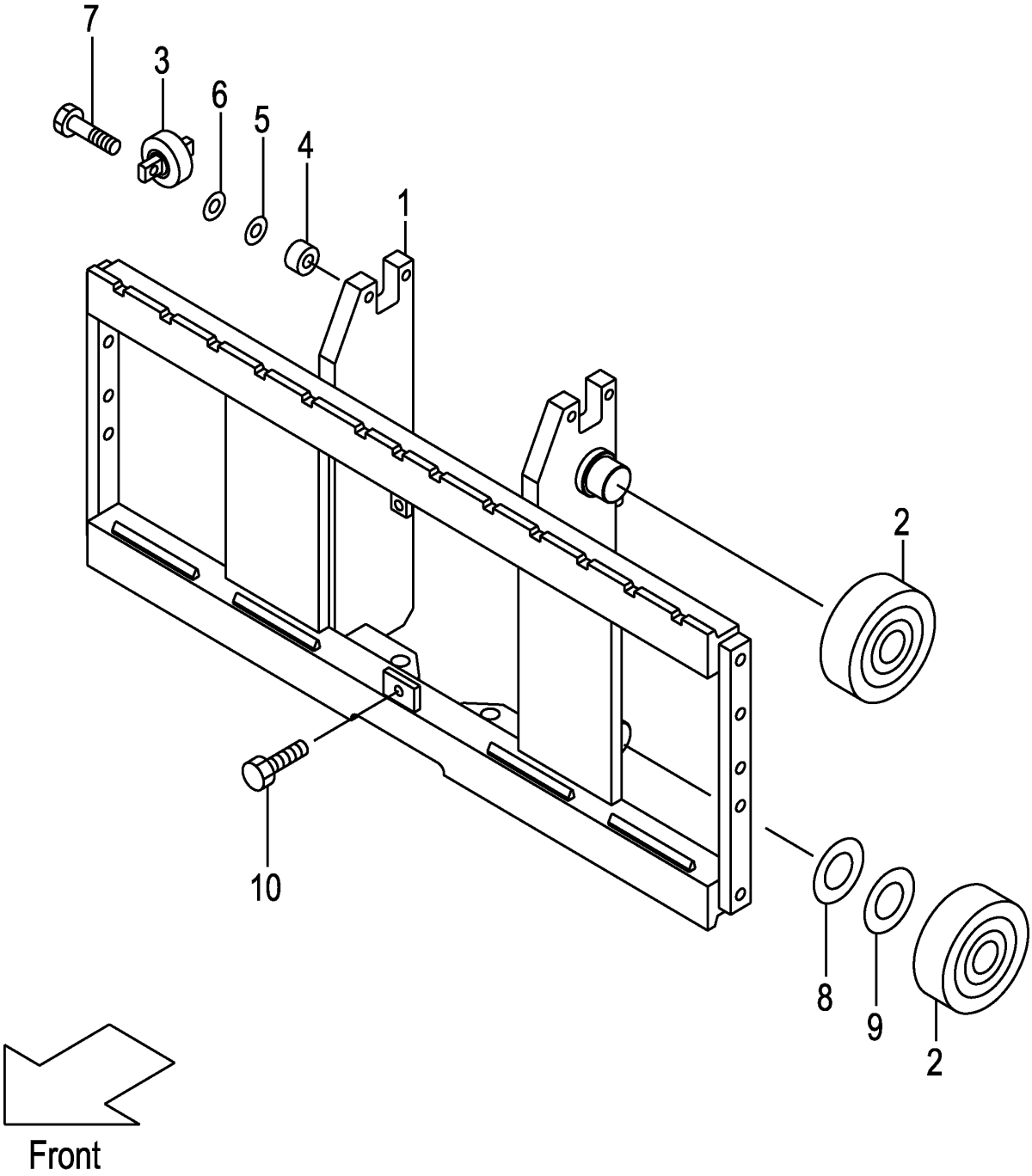

A:VFHM2N5(2T)
B:VFHM2N5(2.5T)

Item No	Part No.	Mark	Description	Req'd	Remarks : Serial No.
12	02432-01008	+	RIVET リベット	4	

M E M O

M E M O

FIG.173 BACKREST [VFHM2N5]

(M7028270) ﾊﾞｯｸﾚｽﾄ

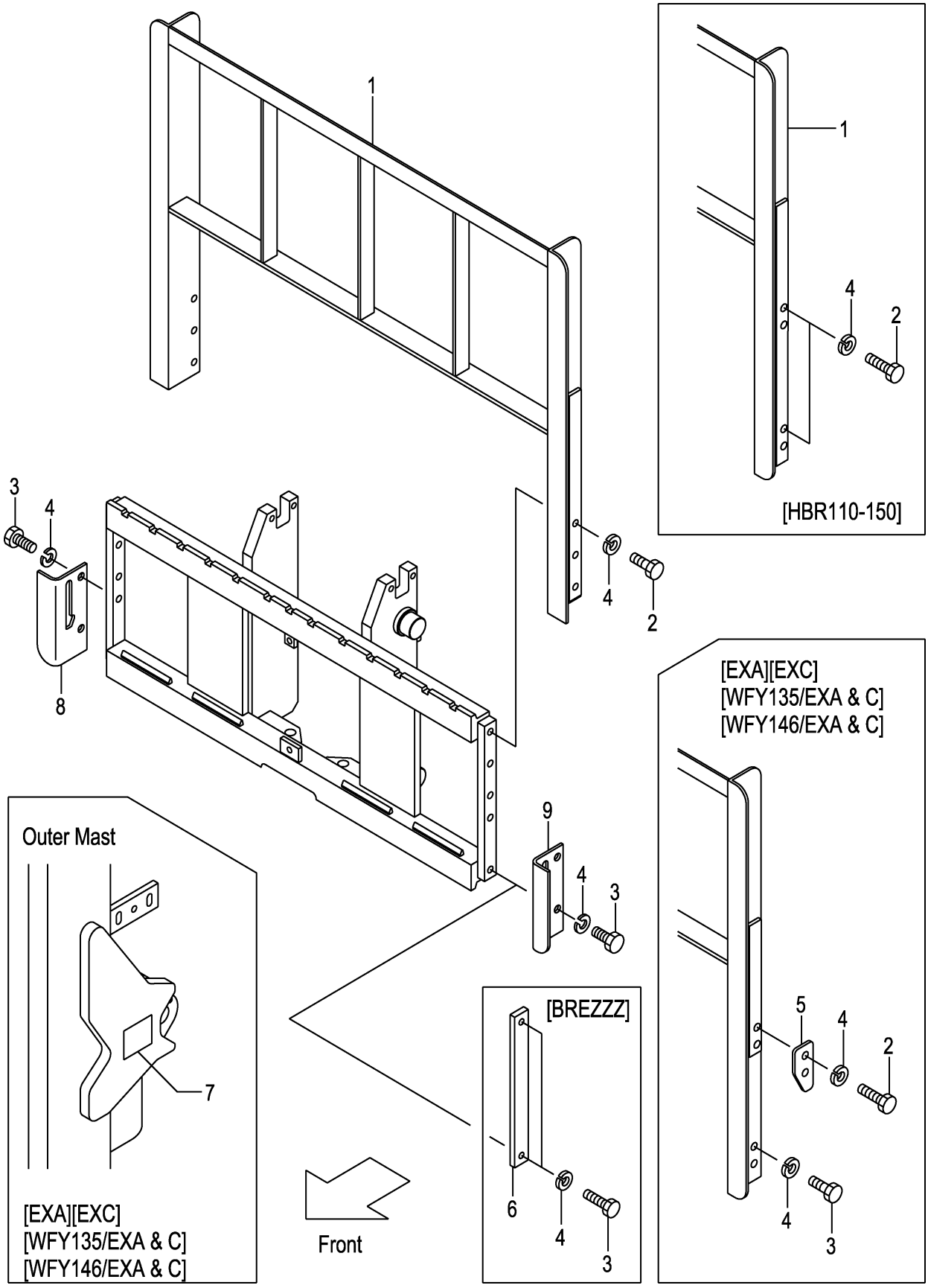

A:VFHM2N5(2T)
B:VFHM2N5(2.5T)

Item No	Part No.	Mark	Description		Req'd	Remarks : Serial No.
1	22N58-22001		BACKREST	ﾊﾞｯｸﾚｽﾄ	1	(WITHOUT BREZZZ)
-	534A2-74001		BACKREST	ﾊﾞｯｸﾚｽﾄ	1	[EXA][EXC]
-	239A8-20101		BACKREST	ﾊﾞｯｸﾚｽﾄ	1	[HBR110]
-	239A8-20111		BACKREST	ﾊﾞｯｸﾚｽﾄ	1	[HBR120]
-	239A8-20121		BACKREST	ﾊﾞｯｸﾚｽﾄ	1	[HBR130]
-	239A8-20131		BACKREST	ﾊﾞｯｸﾚｽﾄ	1	[HBR140]
-	239A8-20141		BACKREST	ﾊﾞｯｸﾚｽﾄ	1	[HBR150]
-	534A1-64402		BACKREST	ﾊﾞｯｸﾚｽﾄ	1	[WFY135]
-	534A1-64412		BACKREST	ﾊﾞｯｸﾚｽﾄ	1	[WFY146]
-	534A2-74101		BACKREST	ﾊﾞｯｸﾚｽﾄ	1	[WFY135/EXA][WFY135/EXC]
-	534A2-74201		BACKREST	ﾊﾞｯｸﾚｽﾄ	1	[WFY146/EXA][WFY146/EXC]
2	01100-14030		BOLT	ﾎﾞﾙﾄ	6	(WITHOUT BREZZZ)
-	01100-14035		BOLT	ﾎﾞﾙﾄ	4	[EXA&C][WFY135/EXA&C] [WFY146/EXA&C]
-	01100-14030		BOLT	ﾎﾞﾙﾄ	8	[HBR110-150]
-	01100-14030		BOLT	ﾎﾞﾙﾄ	4	[WFY135][WFY146]
3	01100-14025		BOLT	ﾎﾞﾙﾄ	4	(WITHOUT HBR110-150)
4	02010-00014		WASHER	ﾜｯｼｬ	10	
-	02010-00014		WASHER	ﾜｯｼｬ	8	[EXA&C][WFY135&146] [HBR110-150] [WFY135&146/EXA&C]
-	02010-00014		WASHER	ﾜｯｼｬ	4	[BREZZZ]
5	534A2-74051		PLATE,STOPPER	ﾌﾟﾚｰﾄ	2	[EXA&C][WFY135/EXA&C] [WFY146/EXA&C]
6	23659-42161		PLATE,SIDE	ﾌﾟﾚｰﾄ	2	[BREZZZ]
7	534A2-74301		DECAL,CAUTION	ﾃﾞｶﾙ	1	[EXA&C][WFY135/EXA&C] [WFY146/EXA&C]
8	22N58-22111		PLATE,UNDER,RH	ﾌﾟﾚｰﾄ	1	
9	22N58-22121		PLATE,UNDER,LH	ﾌﾟﾚｰﾄ	1	

FIG.174 MAST [VFHM2N5]

(M7020710) マスト

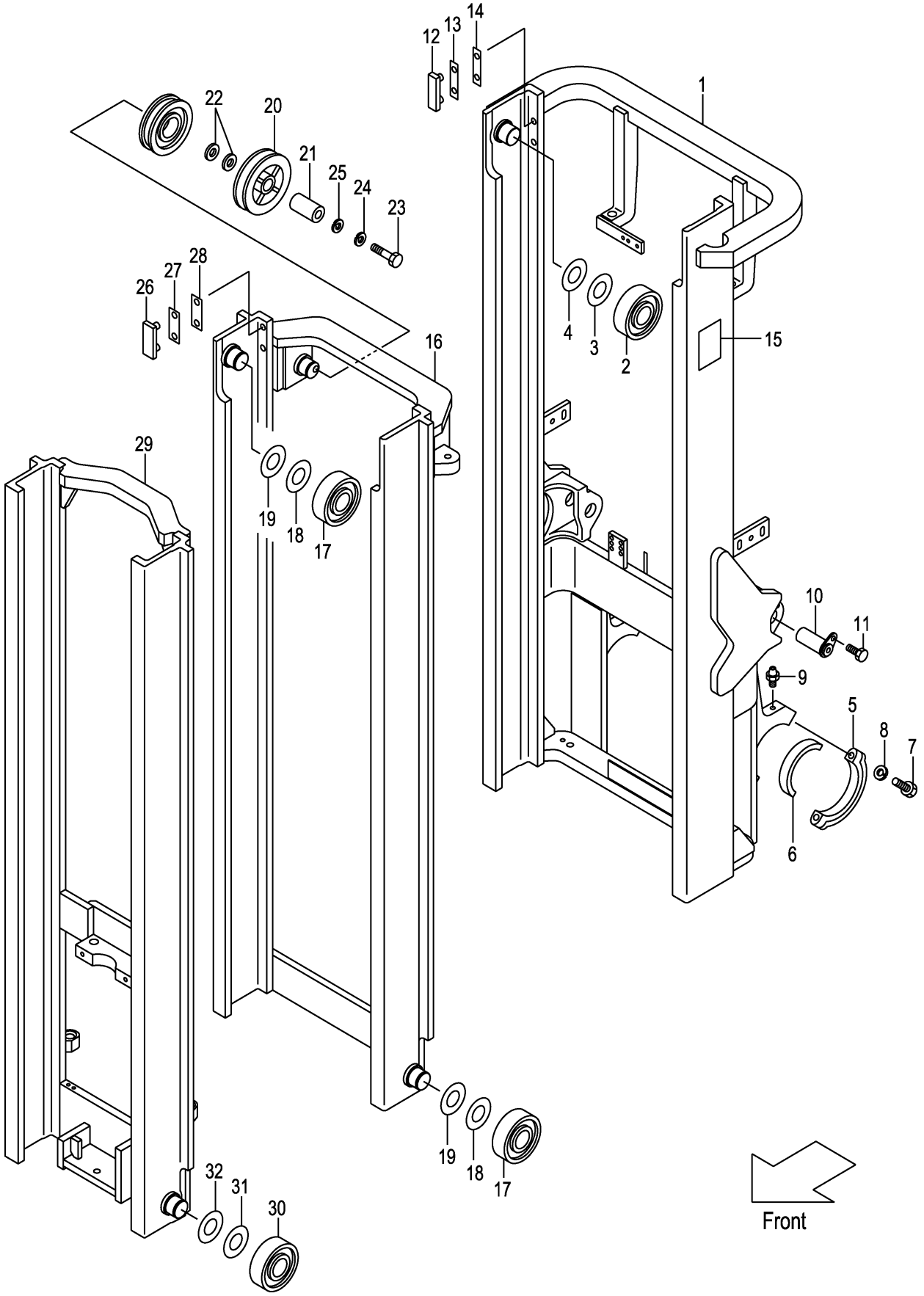

A:VFHM2N5(2T)
B:VFHM2N5(2.5T)

Item No	Part No.	Mark	Description		Req'd	Remarks : Serial No.
1	22N50-70211		MAST,OUTER VFHM360	ｱｳﾀﾏｽﾄ	1	
-	22N50-70221		MAST,OUTER VFHM400	ｱｳﾀﾏｽﾄ	1	
-	22N50-70201		MAST,OUTER VFHM435	ｱｳﾀﾏｽﾄ	1	
-	22N50-70231		MAST,OUTER VFHM480	ｱｳﾀﾏｽﾄ	1	
-	22N50-70241		MAST,OUTER VFHM500	ｱｳﾀﾏｽﾄ	1	
-	22N50-70251		MAST,OUTER VFHM540	ｱｳﾀﾏｽﾄ	1	
-	22N50-70261		MAST,OUTER VFHM550	ｱｳﾀﾏｽﾄ	1	
-	22N50-70271		MAST,OUTER VFHM600	ｱｳﾀﾏｽﾄ	1	
-	22N50-70281		MAST,OUTER VFHM650	ｱｳﾀﾏｽﾄ	1	
-	22N50-70291		MAST,OUTER VFHM700	ｱｳﾀﾏｽﾄ	1	
-	22N50-70301		MAST,OUTER VFHM750	ｱｳﾀﾏｽﾄ	1	
2	277P8-22051		ROLLER,END,119.0	ﾛｰﾗ	2	
-	577P3-74001		ROLLER,END,119.0	ﾛｰﾗ	2	[FC][CS35][FCS35][FCS45] [FCS55]
3	277P8-22071		SHIM,T-0.5	ｼﾑ	12	
4	277P8-22081		SHIM,T-1.0	ｼﾑ	12	
5	277P8-32701		CAP	ｷｬｯﾌﾟ	2	
6	214A8-02201		BUSHING	ﾌﾞｯｼﾝｸﾞ	2	
7	01103-16065		BOLT	ﾎﾞﾙﾄ	4	
8	02011-00016		WASHER	ﾜｯｼｬ	4	
9	04901-00100		FITTING	ﾌｨｯﾃｨﾝｸﾞ	2	
10	272K8-52201		PIN	ﾋﾟﾝ	2	
11	216G8-52301		BOLT	ﾎﾞﾙﾄ	2	
12	216G8-33401		SLIPPER	ｽﾘｯﾊﾟ	2	
13	216G8-33361		SHIM,T-0.5	ｼﾑ	8	
14	216G8-33371		SHIM,T-1.0	ｼﾑ	4	
15	23678-06002		PLATE,NAME	ﾌﾟﾚｰﾄ	1	
16	22N50-70411		MAST,MIDDLE VFHM360	ﾐﾄﾞﾙﾏｽﾄ	1	
-	22N50-70421		MAST,MIDDLE VFHM400	ﾐﾄﾞﾙﾏｽﾄ	1	
-	22N50-70401		MAST,MIDDLE VFHM435	ﾐﾄﾞﾙﾏｽﾄ	1	
-	22N50-70431		MAST,MIDDLE VFHM480	ﾐﾄﾞﾙﾏｽﾄ	1	
-	22N50-70441		MAST,MIDDLE VFHM500	ﾐﾄﾞﾙﾏｽﾄ	1	
-	22N50-70451		MAST,MIDDLE VFHM540	ﾐﾄﾞﾙﾏｽﾄ	1	
-	22N50-70461		MAST,MIDDLE VFHM550	ﾐﾄﾞﾙﾏｽﾄ	1	
-	22N50-70471		MAST,MIDDLE VFHM600	ﾐﾄﾞﾙﾏｽﾄ	1	
-	22N50-70481		MAST,MIDDLE VFHM650	ﾐﾄﾞﾙﾏｽﾄ	1	
-	22N50-70491		MAST,MIDDLE VFHM700	ﾐﾄﾞﾙﾏｽﾄ	1	
-	22N50-70501		MAST,MIDDLE VFHM750	ﾐﾄﾞﾙﾏｽﾄ	1	
17	277P8-22051		ROLLER,END,119.0	ﾛｰﾗ	4	
-	577P3-74001		ROLLER,END,119.0	ﾛｰﾗ	4	[FC][CS35][FCS35][FCS45] [FCS55]
-	277P8-22061		ROLLER,END,119.5	ﾛｰﾗ	(2)	
-	577P3-74011		ROLLER,END,119.5	ﾛｰﾗ	(2)	[FC][CS35][FCS35][FCS45] [FCS55]
18	277P8-22071		SHIM,T-0.5	ｼﾑ	15	
19	277P8-22081		SHIM,T-1.0	ｼﾑ	15	
20	63130-15301		PULLEY	ﾌﾟｰﾘ	1	
21	214A0-72701		COLLAR	ｶﾗｰ	1	
22	62050-12331		SPACER	ｽﾍﾟｰｻ	2	
23	01100-16060		BOLT	ﾎﾞﾙﾄ	1	

FIG.174 MAST [VFHM2N5]

(M7020710) マスト

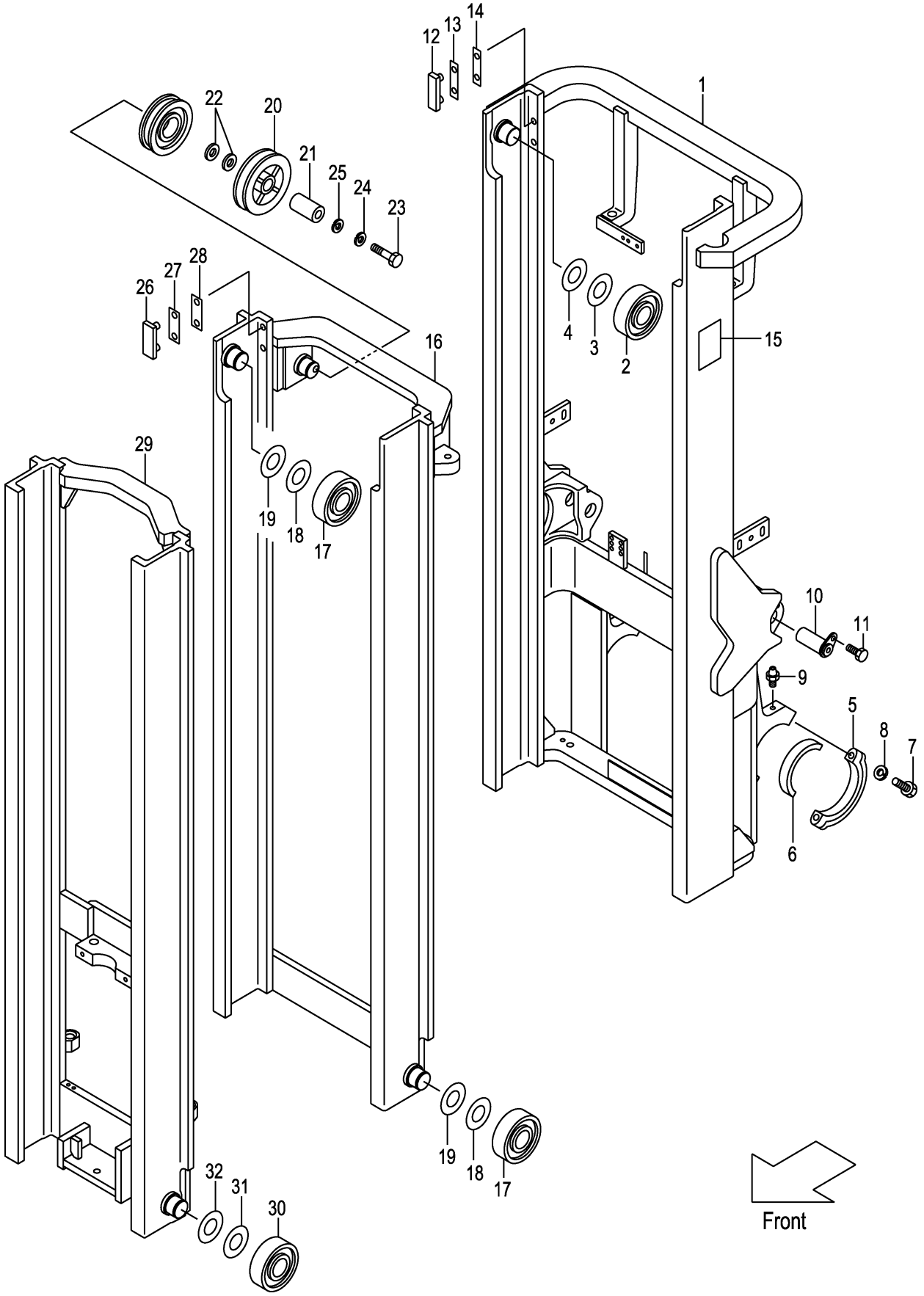

A:VFHM2N5(2T)
B:VFHM2N5(2.5T)

Item No	Part No.	Mark	Description		Req'd	Remarks : Serial No.
24	02010-00016		WASHER	ﾜｯｼｬ	1	
25	02000-00016		WASHER	ﾜｯｼｬ	1	
26	216G8-33351		SLIPPER	ｽﾘｯﾊﾟ	2	
27	216G8-33361		SHIM,T-0.5	ｼﾑ	4	
28	216G8-33371		SHIM,T-1.0	ｼﾑ	8	
29	22N50-70611		MAST,INNER VFHM360	ｲﾝﾅﾏｽﾄ	1	
-	22N50-70621		MAST,INNER VFHM400	ｲﾝﾅﾏｽﾄ	1	
-	22N50-70601		MAST,INNER VFHM435	ｲﾝﾅﾏｽﾄ	1	
-	22N50-70631		MAST,INNER VFHM480	ｲﾝﾅﾏｽﾄ	1	
-	22N50-70641		MAST,INNER VFHM500	ｲﾝﾅﾏｽﾄ	1	
-	22N50-70651		MAST,INNER VFHM540	ｲﾝﾅﾏｽﾄ	1	
-	22N50-70661		MAST,INNER VFHM550	ｲﾝﾅﾏｽﾄ	1	
-	22N50-70671		MAST,INNER VFHM600	ｲﾝﾅﾏｽﾄ	1	
-	22N50-70681		MAST,INNER VFHM650	ｲﾝﾅﾏｽﾄ	1	
-	22N50-70691		MAST,INNER VFHM700	ｲﾝﾅﾏｽﾄ	1	
-	22N50-70701		MAST,INNER VFHM750	ｲﾝﾅﾏｽﾄ	1	
30	277P8-22051		ROLLER,END,119.0	ﾛｰﾗ	2	
-	577P3-74001		ROLLER,END,119.0	ﾛｰﾗ	2	[FC][CS35][FCS35][FCS45] [FCS55]
-	277P8-22061		ROLLER,END,119.5	ﾛｰﾗ	(2)	
-	577P3-74011		ROLLER,END,119.5	ﾛｰﾗ	(2)	[FC][CS35][FCS35][FCS45] [FCS55]
31	277P8-22071		SHIM,T-0.5	ｼﾑ	12	
32	277P8-22081		SHIM,T-1.0	ｼﾑ	12	

M E M O

M E M O

FIG.175 TILT GAUGE [VFHM2N5/(TG,PPC,PR,PRC,MPC)]

(M7020720) ﾃｨﾙﾄｹﾞｰｼﾞ

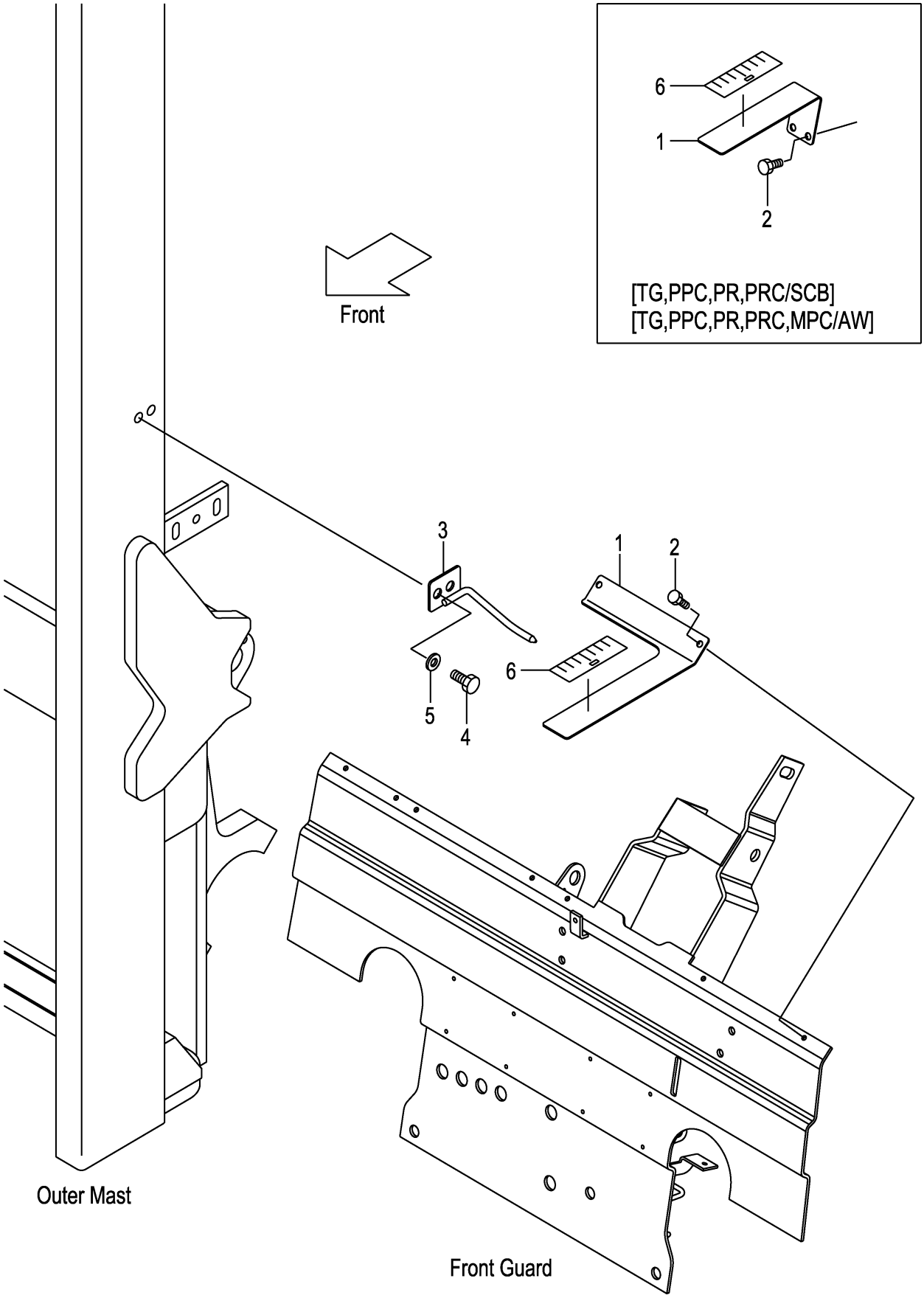

A:VFHM2N5(2T)
B:VFHM2N5(2.5T)

Item No	Part No.	Mark	Description		Req'd	Remarks : Serial No.
1	62A89-21811		GAUGE,TILT	ｹﾞｰｼﾞ	1	[TG][PRC][PPC][MPC][PR]
-	62A89-21831		GAUGE,TILT	ｹﾞｰｼﾞ	1	[SCB/(TG,PR,PPC,PRC,MPC)]
-	62A89-21831		GAUGE,TILT	ｹﾞｰｼﾞ	1	[AW/(TG,PR,PPC,PRC,MPC)]
2	01183-06020		BOLT	ﾎﾞﾙﾄ	2	[TG][PRC][PPC][MPC][PR]
-	01183-06020		BOLT	ﾎﾞﾙﾄ	2	[SCB/(TG,PR,PPC,PRC,MPC)]
-	01183-06020		BOLT	ﾎﾞﾙﾄ	2	[AW/(TG,PR,PPC,PRC,MPC)]
3	62A89-21851		INDICATOR	ｲﾝｼﾞｹｰﾀ	1	[TG][PRC][PPC][MPC][PR]
-	62A89-21851		INDICATOR	ｲﾝｼﾞｹｰﾀ	1	[SCB/(TG,PR,PPC,PRC,MPC)]
-	62A89-21851		INDICATOR	ｲﾝｼﾞｹｰﾀ	1	[AW/(TG,PR,PPC,PRC,MPC)]
4	01184-12025		BOLT	ﾎﾞﾙﾄ	2	[TG][PRC][PPC][MPC][PR]
-	01184-12025		BOLT	ﾎﾞﾙﾄ	2	[SCB/(TG,PR,PPC,PRC,MPC)]
-	01184-12025		BOLT	ﾎﾞﾙﾄ	2	[AW/(TG,PR,PPC,PRC,MPC)]
5	02000-00012		WASHER	ﾜｯｼｬ	2	[TG][PRC][PPC][MPC][PR]
-	02000-00012		WASHER	ﾜｯｼｬ	2	[SCB/(TG,PR,PPC,PRC,MPC)]
-	02000-00012		WASHER	ﾜｯｼｬ	2	[AW/(TG,PR,PPC,PRC,MPC)]
6	62459-23371		SEAL,GAUGE	ｼｰﾙ	1	[TG][PRC][PPC][MPC][PR]
-	62459-23371		SEAL,GAUGE	ｼｰﾙ	1	[SCB/(TG,PR,PPC,PRC,MPC)]
-	62459-23371		SEAL,GAUGE	ｼｰﾙ	1	[AW/(TG,PR,PPC,PRC,MPC)]

FIG.176 LIFT CYLINDER (FRONT) [VFHM2N5]

(M7020810) リフトシリンダ(フロント)

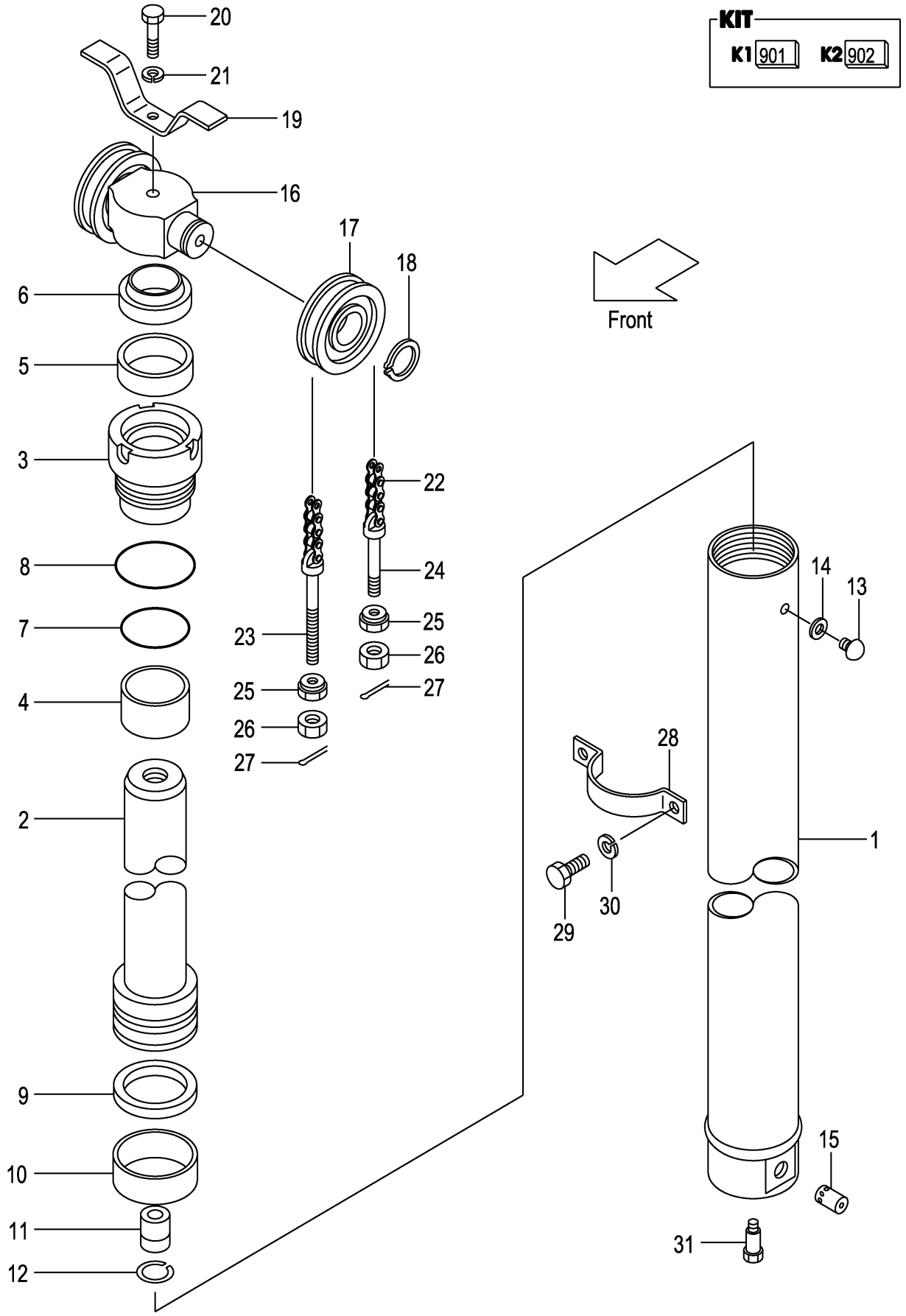

A:VFHM2N5(2T)
B:VFHM2N5(2.5T)

Item No	Part No.	Mark	Description		Req'd	Remarks : Serial No.
A1	212T0-80511		CYL-ASSY,LIFT VFHM360	ﾘﾌﾄｼﾘﾝﾀﾞｱｯｾﾝ	1	INC.1-15
-	212T0-80521		CYL-ASSY,LIFT VFHM400	ﾘﾌﾄｼﾘﾝﾀﾞｱｯｾﾝ	1	INC.1-15
-	212T0-80531		CYL-ASSY,LIFT VFHM435	ﾘﾌﾄｼﾘﾝﾀﾞｱｯｾﾝ	1	INC.1-15
-	212T0-80501		CYL-ASSY,LIFT VFHM480	ﾘﾌﾄｼﾘﾝﾀﾞｱｯｾﾝ	1	INC.1-15
-	212T0-80541		CYL-ASSY,LIFT VFHM500	ﾘﾌﾄｼﾘﾝﾀﾞｱｯｾﾝ	1	INC.1-15
-	212T0-80551		CYL-ASSY,LIFT VFHM540	ﾘﾌﾄｼﾘﾝﾀﾞｱｯｾﾝ	1	INC.1-15
-	212T0-80561		CYL-ASSY,LIFT VFHM550	ﾘﾌﾄｼﾘﾝﾀﾞｱｯｾﾝ	1	INC.1-15
-	212T0-80571		CYL-ASSY,LIFT VFHM600	ﾘﾌﾄｼﾘﾝﾀﾞｱｯｾﾝ	1	INC.1-15
-	212T0-80581		CYL-ASSY,LIFT VFHM650	ﾘﾌﾄｼﾘﾝﾀﾞｱｯｾﾝ	1	INC.1-15
-	212T0-80591		CYL-ASSY,LIFT VFHM700	ﾘﾌﾄｼﾘﾝﾀﾞｱｯｾﾝ	1	INC.1-15
-	212T0-80601		CYL-ASSY,LIFT VFHM750	ﾘﾌﾄｼﾘﾝﾀﾞｱｯｾﾝ	1	INC.1-15
901	B-B675B-00003	K1	KIT,HEAD,CYL	ｼﾘﾝﾀﾞﾍｯﾄﾞｷｯﾄ	1	INC.3,4
902	B-B675A-00006	K2	KIT,REPAIR	ﾘﾍﾟｱｷｯﾄ	1	INC.5-10,14
1	B-B6717-87601		BODY,CYL VFHM360	ﾎﾞﾃﾞｨ	1	
-	B-B6717-87701		BODY,CYL VFHM400	ﾎﾞﾃﾞｨ	1	
-	B-B6717-87801		BODY,CYL VFHM435	ﾎﾞﾃﾞｨ	1	
-	B-B6717-87901		BODY,CYL VFHM480	ﾎﾞﾃﾞｨ	1	
-	B-B6717-88001		BODY,CYL VFHM500	ﾎﾞﾃﾞｨ	1	
-	B-B6717-88101		BODY,CYL VFHM540	ﾎﾞﾃﾞｨ	1	
-	B-B6717-88201		BODY,CYL VFHM550	ﾎﾞﾃﾞｨ	1	
-	B-B6717-88301		BODY,CYL VFHM600	ﾎﾞﾃﾞｨ	1	
-	B-B6717-88401		BODY,CYL VFHM650	ﾎﾞﾃﾞｨ	1	
-	B-B6717-88501		BODY,CYL VFHM700	ﾎﾞﾃﾞｨ	1	
-	B-B6717-88601		BODY,CYL VFHM750	ﾎﾞﾃﾞｨ	1	
2	B-B6717-87602		ROD VFHM360	ﾛｯﾄﾞ	1	
-	B-B6717-87702		ROD VFHM400	ﾛｯﾄﾞ	1	
-	B-B6717-87802		ROD VFHM435	ﾛｯﾄﾞ	1	
-	B-B6717-87902		ROD VFHM480	ﾛｯﾄﾞ	1	
-	B-B6717-88002		ROD VFHM500	ﾛｯﾄﾞ	1	
-	B-B6717-88102		ROD VFHM540	ﾛｯﾄﾞ	1	
-	B-B6717-88202		ROD VFHM550	ﾛｯﾄﾞ	1	
-	B-B6717-88302		ROD VFHM600	ﾛｯﾄﾞ	1	
-	B-B6717-88402		ROD VFHM650	ﾛｯﾄﾞ	1	
-	B-B6717-88502		ROD VFHM700	ﾛｯﾄﾞ	1	
-	B-B6717-88602		ROD VFHM750	ﾛｯﾄﾞ	1	
3	B-B6121-75007	*	HEAD	ﾍｯﾄﾞ	1	
4	B-30131-55009	*	BUSHING	ﾌﾞｯｼﾝｸﾞ	1	
5	B-30961-55013	*	U-RING	Uﾘﾝｸﾞ	1	
6	B-30191-55050	*	RING,WIPER	ﾘﾝｸﾞ	1	
7	B-95123-07000	*	O-RING	Oﾘﾝｸﾞ	1	
8	B-95151-07500	*	O-RING	Oﾘﾝｸﾞ	1	
9	B-B6983-75007	*	RING,SEAL	ﾘﾝｸﾞ	1	
10	B-B6181-75007	*	RING,SLIDE	ﾘﾝｸﾞ	1	
11	B-C4300-22001		VALVE,CHECK	ﾊﾞﾙﾌﾞ	1	
12	B-94721-22101		RING,SNAP	ｽﾅｯﾌﾟﾘﾝｸﾞ	1	
13	B-B6521-90004		PLUG	ﾌﾟﾗｸﾞ	1	
14	B-B6711-00001	*	GASKET	ｶﾞｽｹｯﾄ	1	
15	B-26570-30115		VALVE	ﾊﾞﾙﾌﾞ	1	
16	212T0-82001		HEAD,PISTON	ﾍｯﾄﾞ	1	
17	234A8-43501		SHEAVE	ｼｰﾌﾞ	2	

FIG.176 LIFT CYLINDER (FRONT) [VFHM2N5]

(M7020810) リフトシリンダ(フロント)

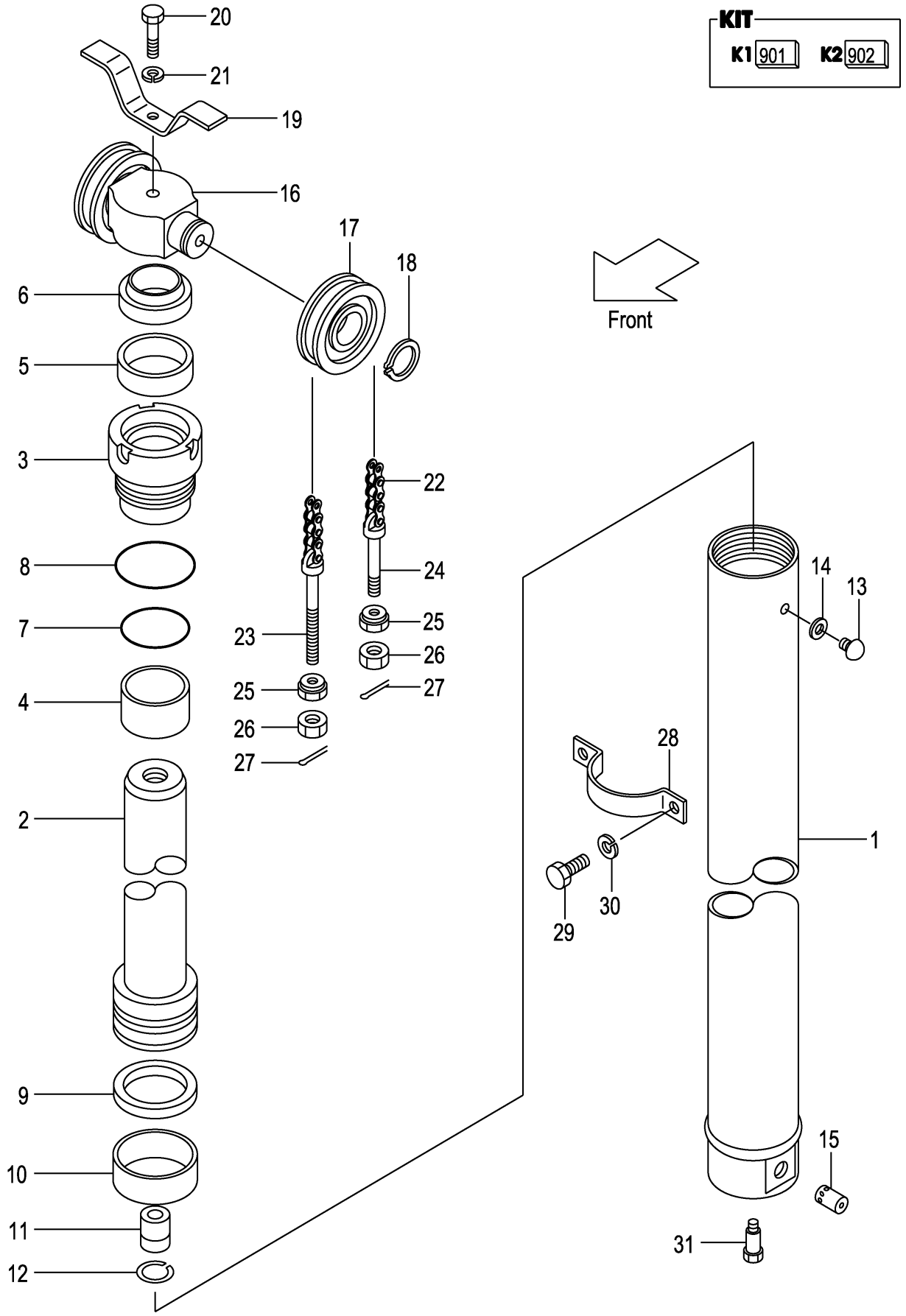

A:VFHM2N5(2T)
B:VFHM2N5(2.5T)

Item No	Part No.	Mark	Description		Req'd	Remarks : Serial No.
-	22208-40031		SHEAVE	ｼｰﾌﾞ	2	[FC][FCS35][FCS45][FCS55]
18	02100-00040		RING,SNAP	ｽﾅｯﾌﾟﾘﾝｸﾞ	2	
19	214A0-82681		STOPPER	ｽﾄｯﾊﾟ	1	
20	01100-16070		BOLT	ﾎﾞﾙﾄ	1	
21	02010-00016		WASHER	ﾜｯｼｬ	1	
22	22679-45651		CHAIN,LEAF VFHM360	ﾁｪｰﾝ	2	
-	22679-45731		CHAIN,LEAF VFHM400	ﾁｪｰﾝ	2	
-	22679-45791		CHAIN,LEAF VFHM435	ﾁｪｰﾝ	2	
-	22679-45871		CHAIN,LEAF VFHM480	ﾁｪｰﾝ	2	
-	22679-45911		CHAIN,LEAF VFHM500	ﾁｪｰﾝ	2	
-	22679-45991		CHAIN,LEAF VFHM540	ﾁｪｰﾝ	2	
-	22679-46011		CHAIN,LEAF VFHM550	ﾁｪｰﾝ	2	
-	22679-46111		CHAIN,LEAF VFHM600	ﾁｪｰﾝ	2	
-	22679-46211		CHAIN,LEAF VFHM650	ﾁｪｰﾝ	2	
-	22679-46331		CHAIN,LEAF VFHM700	ﾁｪｰﾝ	2	
-	22679-46411		CHAIN,LEAF VFHM750	ﾁｪｰﾝ	2	
-	09001-10037		CHAIN,ROLLER VFHM360	ﾁｪｰﾝ	2	[FC][FCS35][FCS45][FCS55]
-	09001-10041		CHAIN,ROLLER VFHM400	ﾁｪｰﾝ	2	[FC][FCS35][FCS45][FCS55]
-	09001-10045		CHAIN,ROLLER VFHM435	ﾁｪｰﾝ	2	[FC][FCS35][FCS45][FCS55]
-	09001-10051		CHAIN,ROLLER VFHM480	ﾁｪｰﾝ	2	[FC][FCS35][FCS45][FCS55]
-	09001-10053		CHAIN,ROLLER VFHM500	ﾁｪｰﾝ	2	[FC][FCS35][FCS45][FCS55]
-	09001-10057		CHAIN,ROLLER VFHM540	ﾁｪｰﾝ	2	[FC][FCS35][FCS45][FCS55]
-	09001-10059		CHAIN,ROLLER VFHM550	ﾁｪｰﾝ	2	[FC][FCS35][FCS45][FCS55]
-	09001-10065		CHAIN,ROLLER VFHM600	ﾁｪｰﾝ	2	[FC][FCS35][FCS45][FCS55]
-	09001-10071		CHAIN,ROLLER VFHM650	ﾁｪｰﾝ	2	[FC][FCS35][FCS45][FCS55]
-	09001-10077		CHAIN,ROLLER VFHM700	ﾁｪｰﾝ	2	[FC][FCS35][FCS45][FCS55]
-	09001-10083		CHAIN,ROLLER VFHM750	ﾁｪｰﾝ	2	[FC][FCS35][FCS45][FCS55]
23	52672-72231		PIN,ANCHOR	ﾋﾟﾝ	2	
-	22218-42111		PIN,ANCHOR	ﾋﾟﾝ	2	[FC][FCS35][FCS45][FCS55]
24	23500-82001		PIN,ANCHOR	ﾋﾟﾝ	2	
-	231A0-82001		PIN,ANCHOR	ﾋﾟﾝ	2	[FC][FCS35][FCS45][FCS55]
25	22218-40191		NUT	ﾅｯﾄ	4	
26	01400-00018		NUT	ﾅｯﾄ	4	
27	02200-03030		PIN,COTTER	ﾋﾟﾝ	4	
28	212T0-82101		SUPPORT	ｻﾎﾟｰﾄ	1	
29	01103-10018		BOLT	ﾎﾞﾙﾄ	2	
30	02011-00010		WASHER	ﾜｯｼｬ	2	
31	214A0-82831		BOLT	ﾎﾞﾙﾄ	1	

M E M O

M E M O

FIG.177 LIFT CYLINDER (REAR) [VFHM2N5]

(M7020820) リフトシリンダ(リヤー)

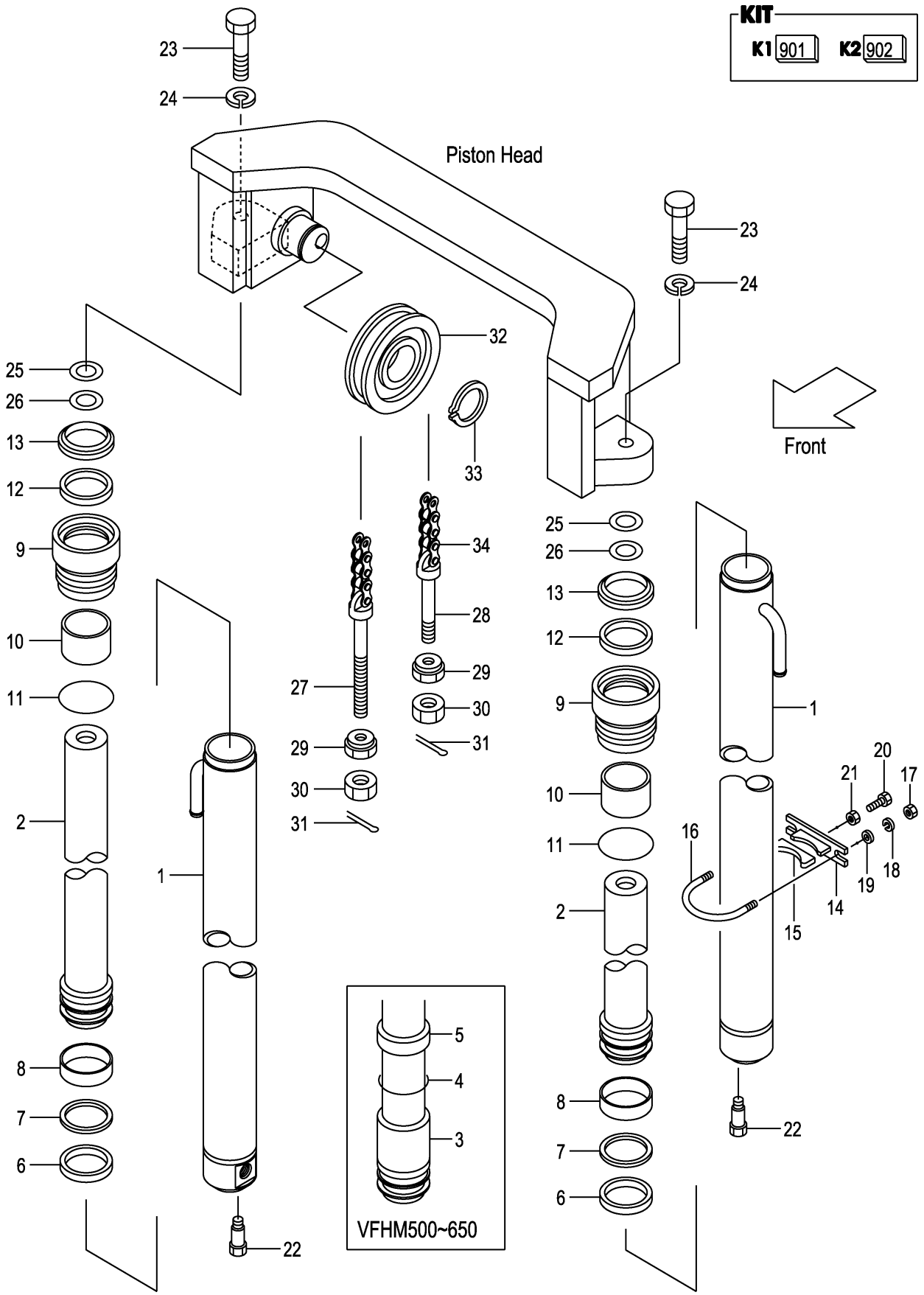

A:VFHM2N5(2T)
B:VFHM2N5(2.5T)

Item No	Part No.	Mark	Description		Req'd	Remarks : Serial No.
A1	22N50-81611		CYL-ASSY,LIFT VFHM360	ﾘﾌﾄｼﾘﾝﾀﾞｱｯｾﾝ	2	INC.1,2,6-13
-	22N50-81621		CYL-ASSY,LIFT VFHM400	ﾘﾌﾄｼﾘﾝﾀﾞｱｯｾﾝ	2	INC.1,2,6-13
-	22N50-81601		CYL-ASSY,LIFT VFHM435	ﾘﾌﾄｼﾘﾝﾀﾞｱｯｾﾝ	2	INC.1,2,6-13
-	22N50-81631		CYL-ASSY,LIFT VFHM480	ﾘﾌﾄｼﾘﾝﾀﾞｱｯｾﾝ	2	INC.1,2,6-13
-	22N50-81641		CYL-ASSY,LIFT VFHM500	ﾘﾌﾄｼﾘﾝﾀﾞｱｯｾﾝ	2	INC.1-13
-	22N50-81651		CYL-ASSY,LIFT VFHM540	ﾘﾌﾄｼﾘﾝﾀﾞｱｯｾﾝ	2	INC.1-13
-	22N50-81661		CYL-ASSY,LIFT VFHM550	ﾘﾌﾄｼﾘﾝﾀﾞｱｯｾﾝ	2	INC.1-13
-	22N50-81671		CYL-ASSY,LIFT VFHM600	ﾘﾌﾄｼﾘﾝﾀﾞｱｯｾﾝ	2	INC.1-13
-	22N50-81681		CYL-ASSY,LIFT VFHM650	ﾘﾌﾄｼﾘﾝﾀﾞｱｯｾﾝ	2	INC.1-13
-	22N50-81691		CYL-ASSY,LIFT VFHM700	ﾘﾌﾄｼﾘﾝﾀﾞｱｯｾﾝ	2	INC.1,2,6-13
-	22N50-81701		CYL-ASSY,LIFT VFHM750	ﾘﾌﾄｼﾘﾝﾀﾞｱｯｾﾝ	2	INC.1,2,6-13
901	B-3050B-00119	K1	KIT,HEAD,CYL	ｼﾘﾝﾀﾞﾍｯﾄﾞｷｯﾄ	2	INC.9,10
902	B-3050A-00093	K2	KIT,REPAIR	ﾘﾍﾟｱｷｯﾄ	2	INC.6,7,11-13
1	B-B6567-10601		BODY,CYL VFHM360	ﾎﾞﾃﾞｨ	2	
-	B-B6567-10701		BODY,CYL VFHM400	ﾎﾞﾃﾞｨ	2	
-	B-B6567-10801		BODY,CYL VFHM435	ﾎﾞﾃﾞｨ	2	
-	B-B6567-10901		BODY,CYL VFHM480	ﾎﾞﾃﾞｨ	2	
-	B-B6567-11001		BODY,CYL VFHM500	ﾎﾞﾃﾞｨ	2	
-	B-B6567-11101		BODY,CYL VFHM540	ﾎﾞﾃﾞｨ	2	
-	B-B6567-11201		BODY,CYL VFHM550	ﾎﾞﾃﾞｨ	2	
-	B-B6567-11301		BODY,CYL VFHM600	ﾎﾞﾃﾞｨ	2	
-	B-B6567-11401		BODY,CYL VFHM650	ﾎﾞﾃﾞｨ	2	
-	B-B6567-11501		BODY,CYL VFHM700	ﾎﾞﾃﾞｨ	2	
-	B-B6567-11601		BODY,CYL VFHM750	ﾎﾞﾃﾞｨ	2	
2	B-B6567-10602		ROD VFHM360	ﾛｯﾄﾞ	2	
-	B-B6567-10702		ROD VFHM400	ﾛｯﾄﾞ	2	
-	B-B6567-10802		ROD VFHM435	ﾛｯﾄﾞ	2	
-	B-B6567-10902		ROD VFHM480	ﾛｯﾄﾞ	2	
-	B-B6567-11002		ROD VFHM500	ﾛｯﾄﾞ	2	
-	B-B6567-11102		ROD VFHM540	ﾛｯﾄﾞ	2	
-	B-B6567-11202		ROD VFHM550	ﾛｯﾄﾞ	2	
-	B-B6567-11302		ROD VFHM600	ﾛｯﾄﾞ	2	
-	B-B6567-11402		ROD VFHM650	ﾛｯﾄﾞ	2	
-	B-B6567-11502		ROD VFHM700	ﾛｯﾄﾞ	2	
-	B-B6567-11602		ROD VFHM750	ﾛｯﾄﾞ	2	
3	B-B6111-40022		SPACER VFHM500	ｽﾍﾟｰｻ	2	
-	B-B6111-40034		SPACER VFHM540	ｽﾍﾟｰｻ	2	
-	B-B6111-40022		SPACER VFHM550	ｽﾍﾟｰｻ	2	
-	B-B6111-40023		SPACER VFHM600	ｽﾍﾟｰｻ	2	
-	B-B6111-40026		SPACER VFHM650	ｽﾍﾟｰｻ	2	
4	B-95151-04000		O-RING	Oﾘﾝｸﾞ	2	(VFHM500-650)
5	B-30096-02207		WEARING	ｳｪｱﾘﾝｸﾞ	2	(VFHM500-650)
6	B-30161-50046	*	U-RING	Uﾘﾝｸﾞ	2	
7	B-30461-50039	*	RING,BACK-UP	ﾘﾝｸﾞ	2	
8	B-30131-50018		WEARING	ｳｪｱﾘﾝｸﾞ	2	
9	B-30121-50102	*	CAP,CYL	ｷｬｯﾌﾟ	2	
10	B-30131-40017	*	BUSHING	ﾌﾞｯｼﾝｸﾞ	2	
11	B-30161-91774	*	O-RING	Oﾘﾝｸﾞ	2	
12	B-30961-04012	*	PACKING	ﾊﾟｯｷﾝｸﾞ	2	
13	B-30191-40025	*	SEAL,DUST	ｼｰﾙ	2	

FIG.177 LIFT CYLINDER (REAR) [VFHM2N5]

(M7020820) リフトシリンダ(リヤー)

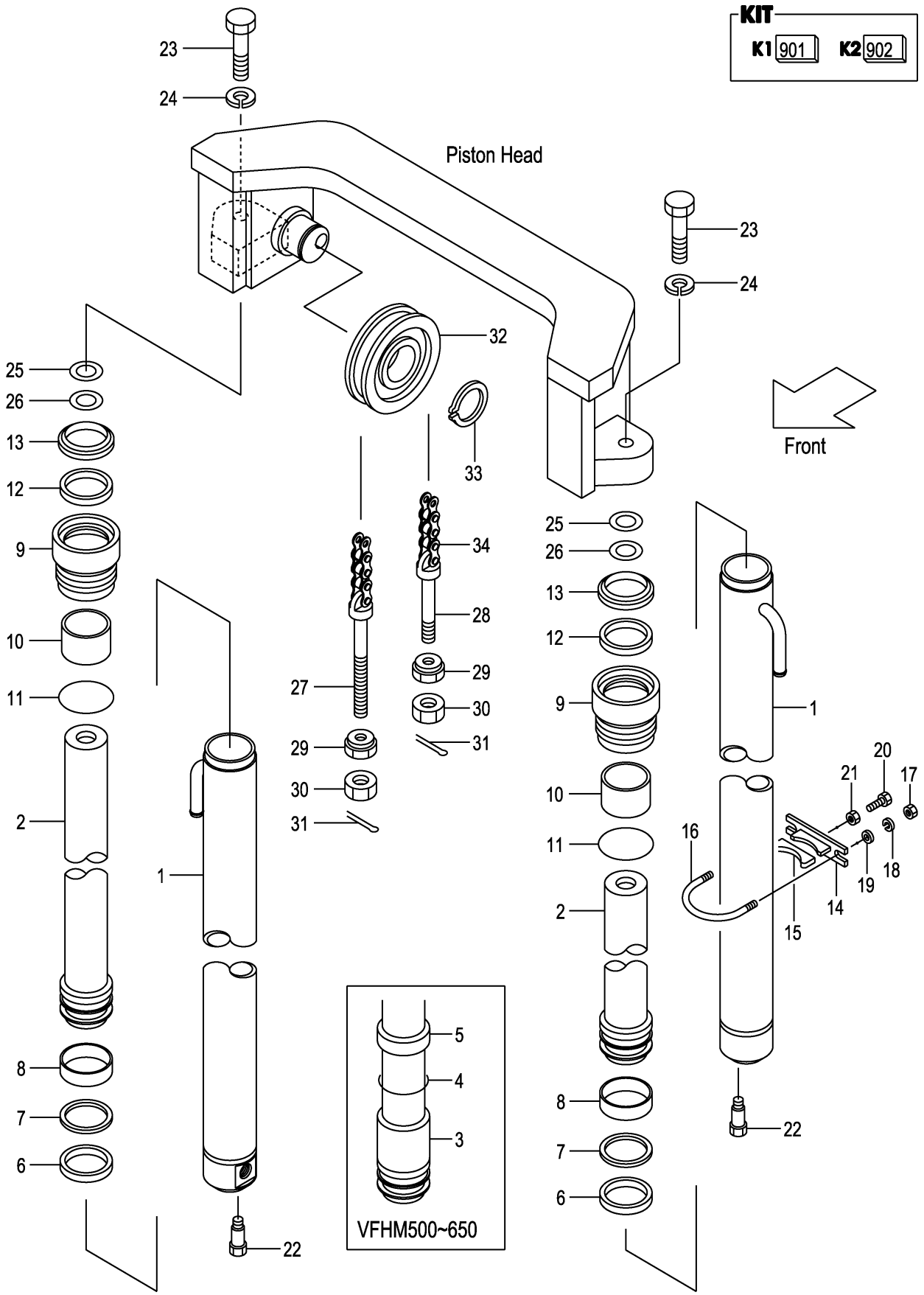

A:VFHM2N5(2T)
B:VFHM2N5(2.5T)

Item No	Part No.	Mark	Description		Req'd	Remarks : Serial No.
A2	215E8-42171		SUPPORT-ASSY	ｻﾎﾟｰﾄｱｯｾﾝ	2	(VFHM360-550) INC.14,15
-	215E8-42171		SUPPORT-ASSY	ｻﾎﾟｰﾄｱｯｾﾝ	4	(VFHM600-750) INC.14,15
14	215E8-42181		SUPPORT	ｻﾎﾟｰﾄ	2	(VFHM360-550)
-	215E8-42181		SUPPORT	ｻﾎﾟｰﾄ	4	(VFHM600-750)
15	24868-42111		RUBBER	ﾗﾊﾞｰ	2	(VFHM360-550)
-	24868-42111		RUBBER	ﾗﾊﾞｰ	4	(VFHM600-750)
16	234A8-42551		U-BOLT	Uﾎﾞﾙﾄ	2	(VFHM360-550)
-	234A8-42551		U-BOLT	Uﾎﾞﾙﾄ	4	(VFHM600-750)
17	234A8-42561		NUT	ﾅｯﾄ	4	(VFHM360-550)
-	234A8-42561		NUT	ﾅｯﾄ	8	(VFHM600-750)
18	02010-20010		WASHER	ﾜｯｼｬ	4	(VFHM360-550)
-	02010-20010		WASHER	ﾜｯｼｬ	8	(VFHM600-750)
19	02000-20010		WASHER	ﾜｯｼｬ	4	(VFHM360-550)
-	02000-20010		WASHER	ﾜｯｼｬ	8	(VFHM600-750)
20	232A8-42201		BOLT	ﾎﾞﾙﾄ	2	(VFHM360-550)
-	232A8-42201		BOLT	ﾎﾞﾙﾄ	4	(VFHM600-750)
21	234A8-42571		NUT	ﾅｯﾄ	2	(VFHM360-550)
-	234A8-42571		NUT	ﾅｯﾄ	4	(VFHM600-750)
22	214A8-42661		BOLT	ﾎﾞﾙﾄ	2	
23	01103-14040		BOLT	ﾎﾞﾙﾄ	2	
24	02011-00014		WASHER	ﾜｯｼｬ	2	
25	22517-40051		SHIM,T-1.0	ｼﾑ	10	
26	22717-40081		SHIM,T-0.5	ｼﾑ	10	
27	52672-72231		PIN,ANCHOR	ﾋﾟﾝ	2	
-	22218-42111		PIN,ANCHOR	ﾋﾟﾝ	2	[FC][FCS35][FCS45][FCS55]
28	23500-82001		PIN,ANCHOR	ﾋﾟﾝ	2	
-	23658-42531		PIN,ANCHOR	ﾋﾟﾝ	2	[FC][FCS35][FCS45][FCS55]
29	22218-40191		NUT	ﾅｯﾄ	4	
30	01400-00018		NUT	ﾅｯﾄ	4	
31	02200-03030		PIN,COTTER	ﾋﾟﾝ	4	
32	234A8-43501		SHEAVE	ｼｰﾌﾞ	2	
-	22208-40031		SHEAVE	ｼｰﾌﾞ	2	[FC][FCS35][FCS45][FCS55]
33	02100-00040		RING,SNAP	ｽﾅｯﾌﾟﾘﾝｸﾞ	2	
34	22679-45831		CHAIN,LEAF VFHM360	ﾁｪｰﾝ	2	
-	22679-45891		CHAIN,LEAF VFHM400	ﾁｪｰﾝ	2	
-	22679-45951		CHAIN,LEAF VFHM435	ﾁｪｰﾝ	2	
-	22679-46031		CHAIN,LEAF VFHM480	ﾁｪｰﾝ	2	
-	22679-46091		CHAIN,LEAF VFHM500	ﾁｪｰﾝ	2	
-	22679-46151		CHAIN,LEAF VFHM540	ﾁｪｰﾝ	2	
-	22679-46171		CHAIN,LEAF VFHM550	ﾁｪｰﾝ	2	
-	22679-46271		CHAIN,LEAF VFHM600	ﾁｪｰﾝ	2	
-	22679-46391		CHAIN,LEAF VFHM650	ﾁｪｰﾝ	2	
-	22679-46491		CHAIN,LEAF VFHM700	ﾁｪｰﾝ	2	
-	22679-46591		CHAIN,LEAF VFHM750	ﾁｪｰﾝ	2	
-	09001-10049		CHAIN,ROLLER VFHM360	ﾁｪｰﾝ	2	[FC][FCS35][FCS45][FCS55]
-	09001-10053		CHAIN,ROLLER VFHM400	ﾁｪｰﾝ	2	[FC][FCS35][FCS45][FCS55]
-	09001-10057		CHAIN,ROLLER VFHM435	ﾁｪｰﾝ	2	[FC][FCS35][FCS45][FCS55]
-	09001-10061		CHAIN,ROLLER VFHM480	ﾁｪｰﾝ	2	[FC][FCS35][FCS45][FCS55]
-	09001-10065		CHAIN,ROLLER VFHM500	ﾁｪｰﾝ	2	[FC][FCS35][FCS45][FCS55]
-	09001-10069		CHAIN,ROLLER VFHM540	ﾁｪｰﾝ	2	[FC][FCS35][FCS45][FCS55]

FIG.177 LIFT CYLINDER (REAR) [VFHM2N5]

(M7020820) リフトシリンダ(リヤー)

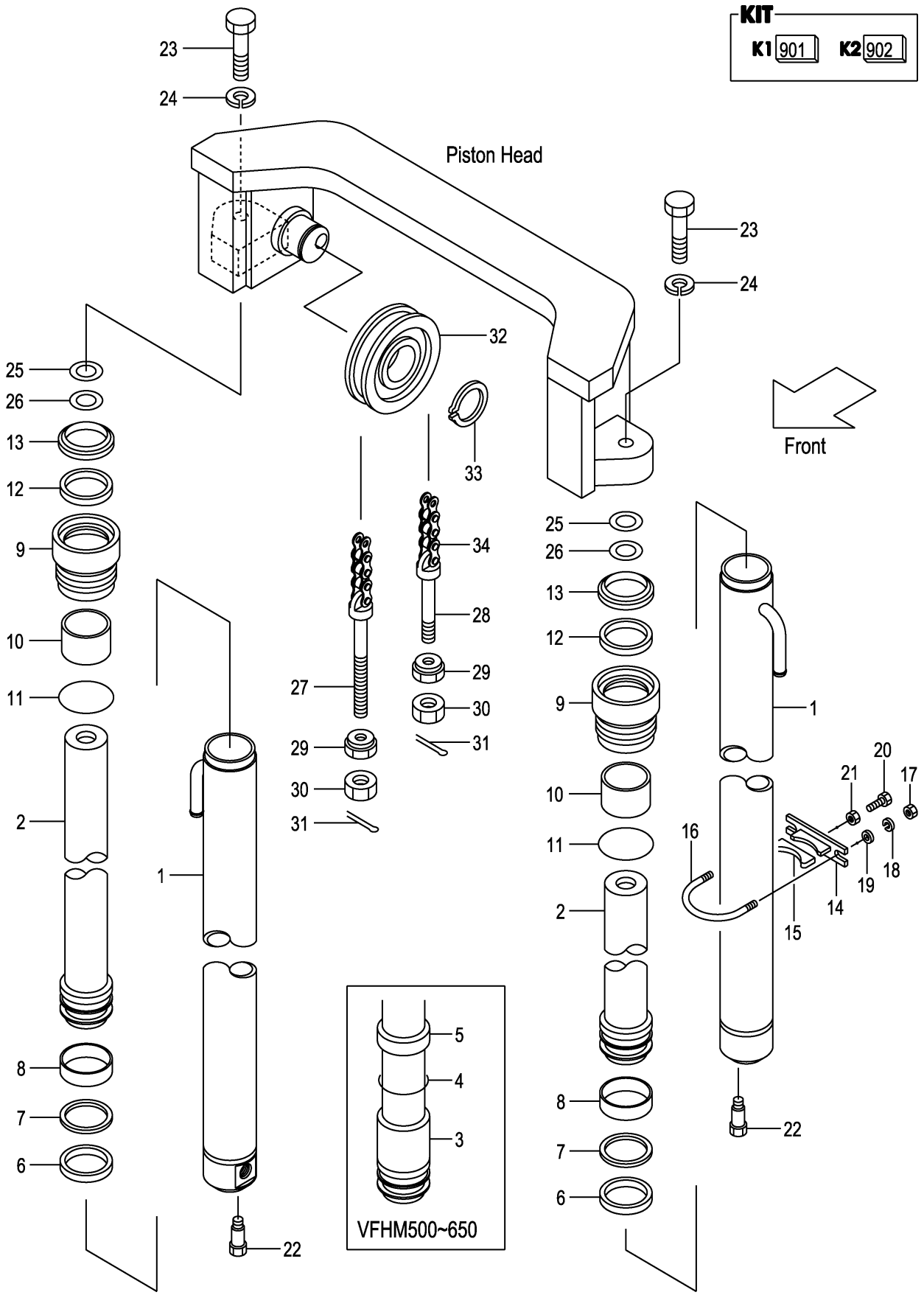

A:VFHM2N5(2T)
B:VFHM2N5(2.5T)

Item No	Part No.	Mark	Description	Req'd	Remarks : Serial No.
-	09001-10071		CHAIN,ROLLER VFHM550 ﾁｪｰﾝ	2	[FC][FCS35][FCS45][FCS55]
-	09001-10077		CHAIN,ROLLER VFHM600 ﾁｪｰﾝ	2	[FC][FCS35][FCS45][FCS55]
-	09001-10083		CHAIN,ROLLER VFHM650 ﾁｪｰﾝ	2	[FC][FCS35][FCS45][FCS55]
-	09001-10089		CHAIN,ROLLER VFHM700 ﾁｪｰﾝ	2	[FC][FCS35][FCS45][FCS55]
-	09001-10095		CHAIN,ROLLER VFHM750 ﾁｪｰﾝ	2	[FC][FCS35][FCS45][FCS55]

FIG.178 MAST PIPING [VFHM2N5]

(M7020830) マストパイピング

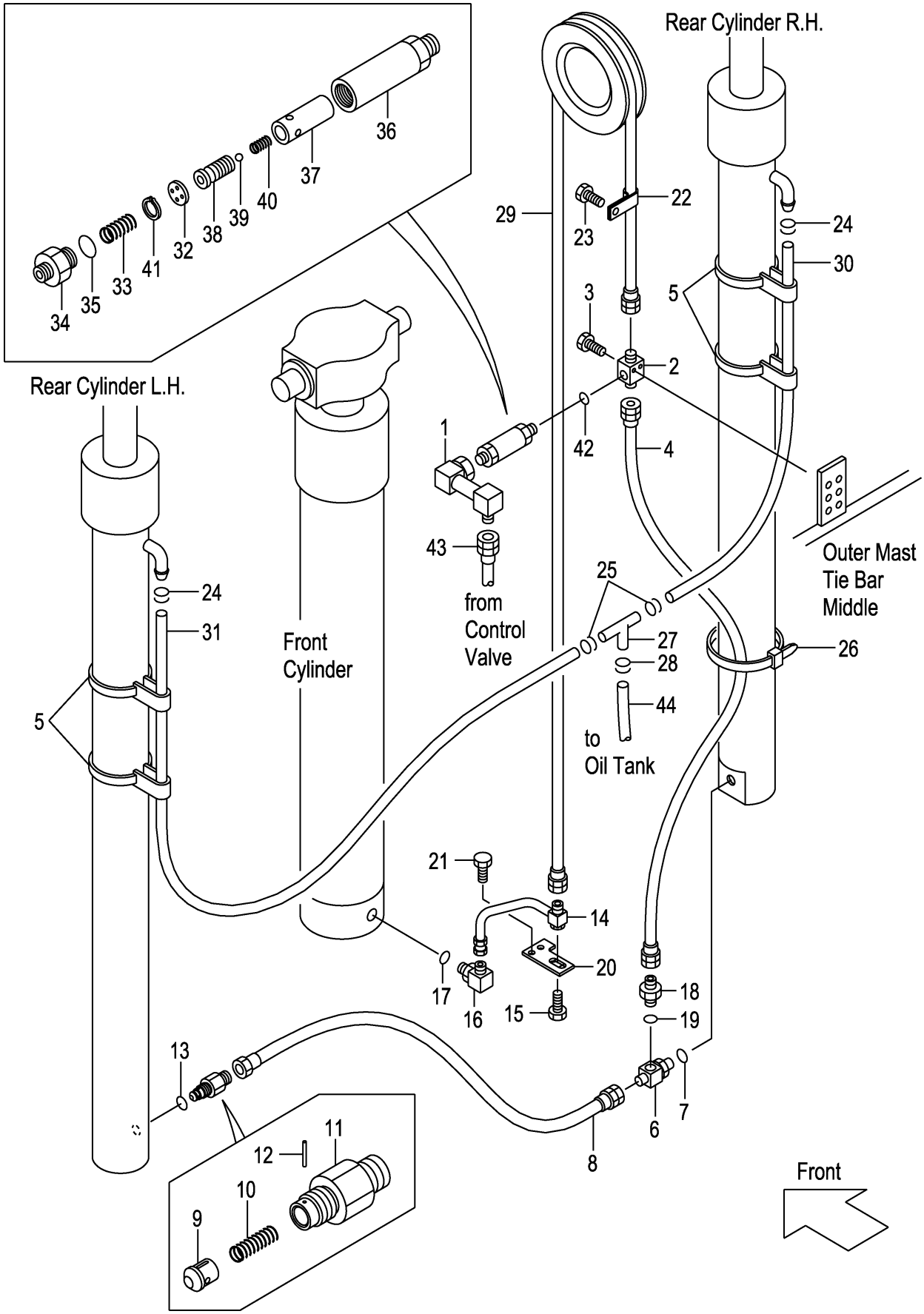

A:VFHM2N5(2T)
B:VFHM2N5(2.5T)

Item No	Part No.	Mark	Description		Req'd	Remarks : Serial No.
1	22N90-90161		PIPE	ﾊﾟｲﾌﾟ	1	
2	229F0-94101		THREE-WAY	ｽﾘｰｳｪｲ	1	
3	01184-10040		BOLT	ﾎﾞﾙﾄ	2	
4	216G0-93151		HOSE	ﾎｰｽ	1	
5	22N58-45001		BAND	ﾊﾞﾝﾄﾞ	4	
A1	216G0-93101		THREE-WAY-ASSY	ｽﾘｰｳｪｲｱｯｾﾝ	1	INC.6,7
6	NO PART NO.	#	THREE-WAY	ｽﾘｰｳｪｲ	1	
7	03320-00140		O-RING	Oﾘﾝｸﾞ	1	
8	22N50-92101		HOSE	ﾎｰｽ	1	
A2	234A8-40701		VALVE-ASSY,CUT	ｶｯﾄﾊﾞﾙﾌﾞｱｯｾﾝ	1	INC.9-13
9	234A8-42602		PISTON	ﾋﾟｽﾄﾝ	1	
10	234A8-42611		SPRING	ｽﾌﾟﾘﾝｸﾞ	1	
11	234A8-42622		NIPPLE	ﾆｯﾌﾟﾙ	1	
12	02270-01014		PIN	ﾋﾟﾝ	1	
13	03320-00140		O-RING	Oﾘﾝｸﾞ	1	
14	22N90-90152		PIPE	ﾊﾟｲﾌﾟ	1	
15	01186-10020		BOLT & WASHER	ﾎﾞﾙﾄ & ﾜｯｼｬ	1	
A3	04150-20404		ELBOW-ASSY	ｴﾙﾎﾞｱｯｾﾝ	1	INC.16,17
16	NO PART NO.	#	ELBOW	ｴﾙﾎﾞ	1	
17	03320-00180		O-RING	Oﾘﾝｸﾞ	1	
A4	04134-20404		NIPPLE-ASSY	ﾆｯﾌﾟﾙｱｯｾﾝ	1	INC.18,19
18	NO PART NO.	#	NIPPLE	ﾆｯﾌﾟﾙ	1	
19	03320-00180		O-RING	Oﾘﾝｸﾞ	1	
20	22N50-73191		PLATE	ﾌﾟﾚｰﾄ	1	
21	01185-08020		BOLT	ﾎﾞﾙﾄ	2	
22	26602-42101		CLIP	ｸﾘｯﾌﾟ	1	
23	01184-10012		BOLT	ﾎﾞﾙﾄ	1	
24	24329-46201		CLIP	ｸﾘｯﾌﾟ	2	
25	04911-00021		CLIP	ｸﾘｯﾌﾟ	2	
26	25790-94021		BAND,HOSE	ﾊﾞﾝﾄﾞ	1	
27	53675-55051		THREE-WAY	ｽﾘｰｳｪｲ	1	
28	04911-00021		CLIP	ｸﾘｯﾌﾟ	2	
29	04601-44230		HOSE VFHM360	ﾎｰｽ	1	
-	04601-44255		HOSE VFHM400	ﾎｰｽ	1	
-	04601-44279		HOSE VFHM435	ﾎｰｽ	1	
-	04601-44309		HOSE VFHM480	ﾎｰｽ	1	
-	04601-44328		HOSE VFHM500	ﾎｰｽ	1	
-	04601-44353		HOSE VFHM540	ﾎｰｽ	1	
-	04601-44361		HOSE VFHM550	ﾎｰｽ	1	
-	04601-44397		HOSE VFHM600	ﾎｰｽ	1	
-	04601-44439		HOSE VFHM650	ﾎｰｽ	1	
-	04601-44482		HOSE VFHM700	ﾎｰｽ	1	
-	04601-44515		HOSE VFHM750	ﾎｰｽ	1	
30	04710-04135		HOSE,RH VFHM360	ﾎｰｽ	1	
-	04710-04150		HOSE,RH VFHM400	ﾎｰｽ	1	
-	04710-04160		HOSE,RH VFHM435	ﾎｰｽ	1	
-	04710-04175		HOSE,RH VFHM480	ﾎｰｽ	1	
-	04710-04185		HOSE,RH VFHM500	ﾎｰｽ	1	
-	04710-04200		HOSE,RH VFHM540	ﾎｰｽ	1	
-	04710-04205		HOSE,RH VFHM550	ﾎｰｽ	1	

FIG.178 MAST PIPING [VFHM2N5]

(M7020830) マストパイピング

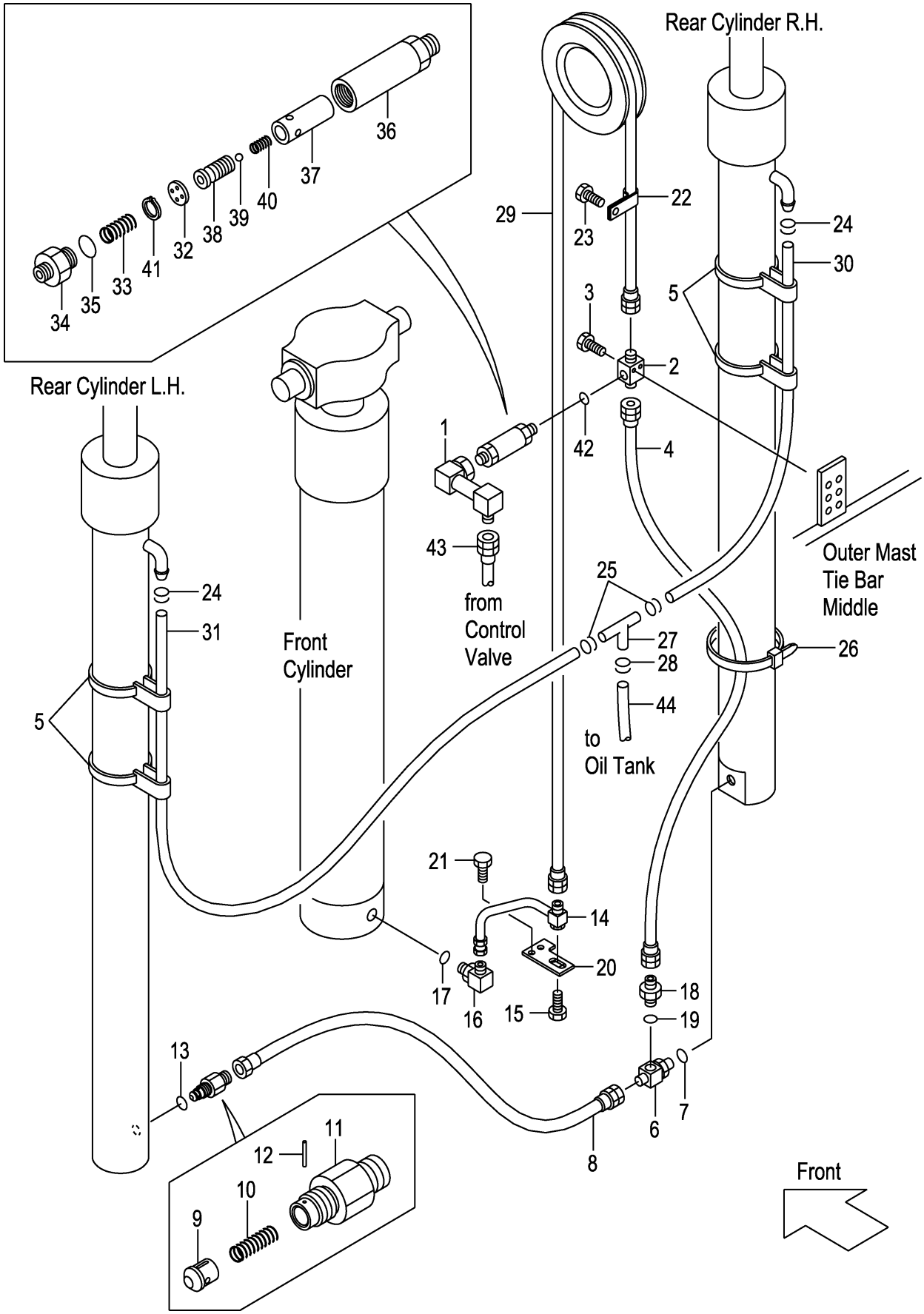

A:VFHM2N5(2T)
B:VFHM2N5(2.5T)

Item No	Part No.	Mark	Description		Req'd	Remarks : Serial No.
-	04710-04220		HOSE,RH VFHM600	ﾎｰｽ	1	
-	04710-04245		HOSE,RH VFHM650	ﾎｰｽ	1	
-	04710-04265		HOSE,RH VFHM700	ﾎｰｽ	1	
-	04710-04280		HOSE,RH VFHM750	ﾎｰｽ	1	
31	04710-04140		HOSE,LH VFHM360	ﾎｰｽ	1	
-	04710-04155		HOSE,LH VFHM400	ﾎｰｽ	1	
-	04710-04165		HOSE,LH VFHM435	ﾎｰｽ	1	
-	04710-04180		HOSE,LH VFHM480	ﾎｰｽ	1	
-	04710-04190		HOSE,LH VFHM500	ﾎｰｽ	1	
-	04710-04205		HOSE,LH VFHM540	ﾎｰｽ	1	
-	04710-04210		HOSE,LH VFHM550	ﾎｰｽ	1	
-	04710-04225		HOSE,LH VFHM600	ﾎｰｽ	1	
-	04710-04250		HOSE,LH VFHM650	ﾎｰｽ	1	
-	04710-04270		HOSE,LH VFHM700	ﾎｰｽ	1	
-	04710-04285		HOSE,LH VFHM750	ﾎｰｽ	1	
A5	234A8-41001		REGULATOR-ASSY,FLOW	ﾌﾛｰﾚｷﾞｭﾚｰﾀｱｯｾﾝ	1	INC.32-41
32	NO PART NO.	#	PLATE	ﾌﾟﾚｰﾄ	1	
33	27979-43101		SPRING	ｽﾌﾟﾘﾝｸﾞ	1	
34	NO PART NO.	#	NIPPLE	ﾆｯﾌﾟﾙ	1	
35	03300-00280		O-RING	Oﾘﾝｸﾞ	1	
36	NO PART NO.	#	CASE	ｹｰｽ	1	
37	NO PART NO.	#	SLEEVE	ｽﾘｰﾌﾞ	1	
38	NO PART NO.	#	PISTON	ﾋﾟｽﾄﾝ	1	
39	24459-42951		BALL,NYLON	ﾎﾞｰﾙ	1	
40	214A8-44151		SPRING	ｽﾌﾟﾘﾝｸﾞ	1	
41	02110-00018		RING,SNAP	ｽﾅｯﾌﾟﾘﾝｸﾞ	1	
42	03320-00180		O-RING	Oﾘﾝｸﾞ	1	
43	277P0-92131		HOSE	ﾎｰｽ	1	
44	04710-04150		HOSE	ﾎｰｽ	1	

M E M O

M E M O

FIG.179 FORK [VFHM2N4]

(M7028170) フォーク

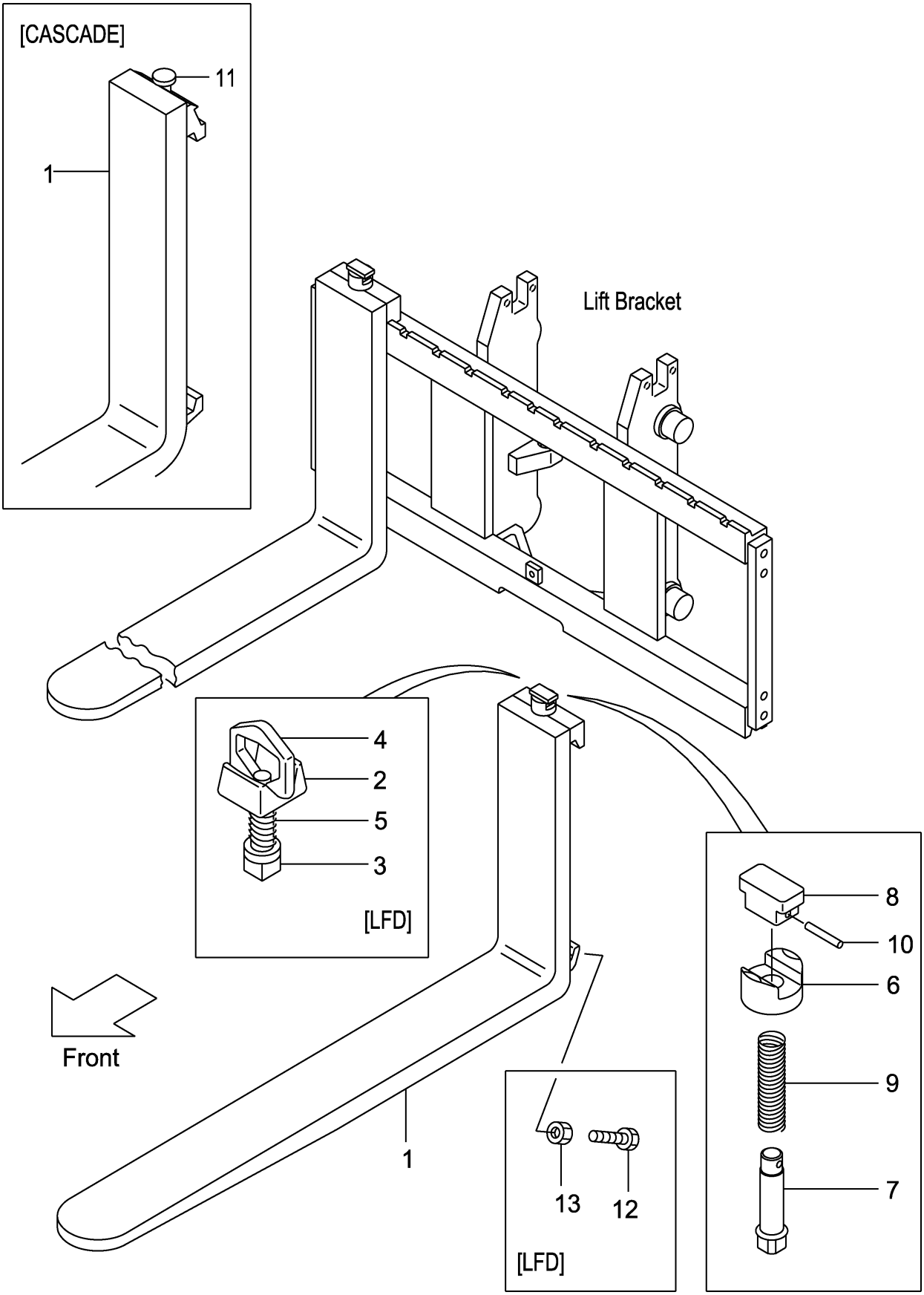

A:VFHM2N4(2T)
B:VFHM2N4(2.5T)

Item No	Part No.	Mark	Description		Req'd	Remarks : Serial No.
1	231A8-10101		FORK	ﾌｫｰｸ	2	A
						(L=920) INC.6-10
-	214A8-10512		FORK	ﾌｫｰｸ	2	B
						(L=1070) INC.6-10
-	214A8-10512		FORK	ﾌｫｰｸ	2	[EX] INC.6-10
-	231A8-10171		FORK	ﾌｫｰｸ	2	A
						[LF090] INC.6-10
-	231F8-10571		FORK	ﾌｫｰｸ	2	B
						[LF090] INC.6-10
-	231A8-10101		FORK	ﾌｫｰｸ	2	A
						[LF092] INC.6-10
-	231F8-10501		FORK	ﾌｫｰｸ	2	B
						[LF092] INC.6-10
-	214A8-10582		FORK	ﾌｫｰｸ	2	[LF100] INC.6-10
-	214A8-10512		FORK	ﾌｫｰｸ	2	[LF107] INC.6-10
-	214A8-10592		FORK	ﾌｫｰｸ	2	[LF110] INC.6-10
-	214A8-10602		FORK	ﾌｫｰｸ	2	[LF120] INC.6-10
-	214A8-10522		FORK	ﾌｫｰｸ	2	[LF122] INC.6-10
-	214A8-10612		FORK	ﾌｫｰｸ	2	[LF130] INC.6-10
-	214A8-10532		FORK	ﾌｫｰｸ	2	[LF137] INC.6-10
-	214A8-10622		FORK	ﾌｫｰｸ	2	[LF140] INC.6-10
-	214A8-10632		FORK	ﾌｫｰｸ	2	[LF150] INC.6-10
-	214A8-10542		FORK	ﾌｫｰｸ	2	[LF152] INC.6-10
-	214A8-10642		FORK	ﾌｫｰｸ	2	[LF160] INC.6-10
-	214A8-10552		FORK	ﾌｫｰｸ	2	[LF167] INC.6-10
-	214A8-10653		FORK	ﾌｫｰｸ	2	[LF170] INC.6-10
-	214A8-10663		FORK	ﾌｫｰｸ	2	[LF180] INC.6-10
-	214A8-10563		FORK	ﾌｫｰｸ	2	[LF182] INC.6-10
-	214A8-10673		FORK	ﾌｫｰｸ	2	[LF190] INC.6-10
-	214A8-10683		FORK	ﾌｫｰｸ	2	[LF200] INC.6-10
-	234A8-10571		FORK	ﾌｫｰｸ	2	[LFD090] INC.2-5
-	234A8-10501		FORK	ﾌｫｰｸ	2	[LFD092] INC.2-5
-	234A8-10581		FORK	ﾌｫｰｸ	2	[LFD100] INC.2-5
-	234A8-10511		FORK	ﾌｫｰｸ	2	[LFD107] INC.2-5
-	234A8-10591		FORK	ﾌｫｰｸ	2	[LFD110] INC.2-5
-	234A8-10601		FORK	ﾌｫｰｸ	2	[LFD120] INC.2-5
-	234A8-10521		FORK	ﾌｫｰｸ	2	[LFD122] INC.2-5
-	234A8-10611		FORK	ﾌｫｰｸ	2	[LFD130] INC.2-5
-	234A8-10531		FORK	ﾌｫｰｸ	2	[LFD137] INC.2-5
-	234A8-10621		FORK	ﾌｫｰｸ	2	[LFD140] INC.2-5
-	234A8-10631		FORK	ﾌｫｰｸ	2	[LFD150] INC.2-5
-	234A8-10541		FORK	ﾌｫｰｸ	2	[LFD152] INC.2-5
-	234A8-10641		FORK	ﾌｫｰｸ	2	[LFD160] INC.2-5
-	234A8-10551		FORK	ﾌｫｰｸ	2	[LFD167] INC.2-5
-	234A8-10652		FORK	ﾌｫｰｸ	2	[LFD170] INC.2-5
-	234A8-10662		FORK	ﾌｫｰｸ	2	[LFD180] INC.2-5
-	234A8-10562		FORK	ﾌｫｰｸ	2	[LFD182] INC.2-5
-	234A8-10672		FORK	ﾌｫｰｸ	2	[LFD190] INC.2-5
-	234A8-10682		FORK	ﾌｫｰｸ	2	[LFD200] INC.2-5
-	22N58-10501		FORK	ﾌｫｰｸ	2	[LF092/CASCADE] INC.11

FIG.179 FORK [VFHM2N4]

(M7028170) フォーク

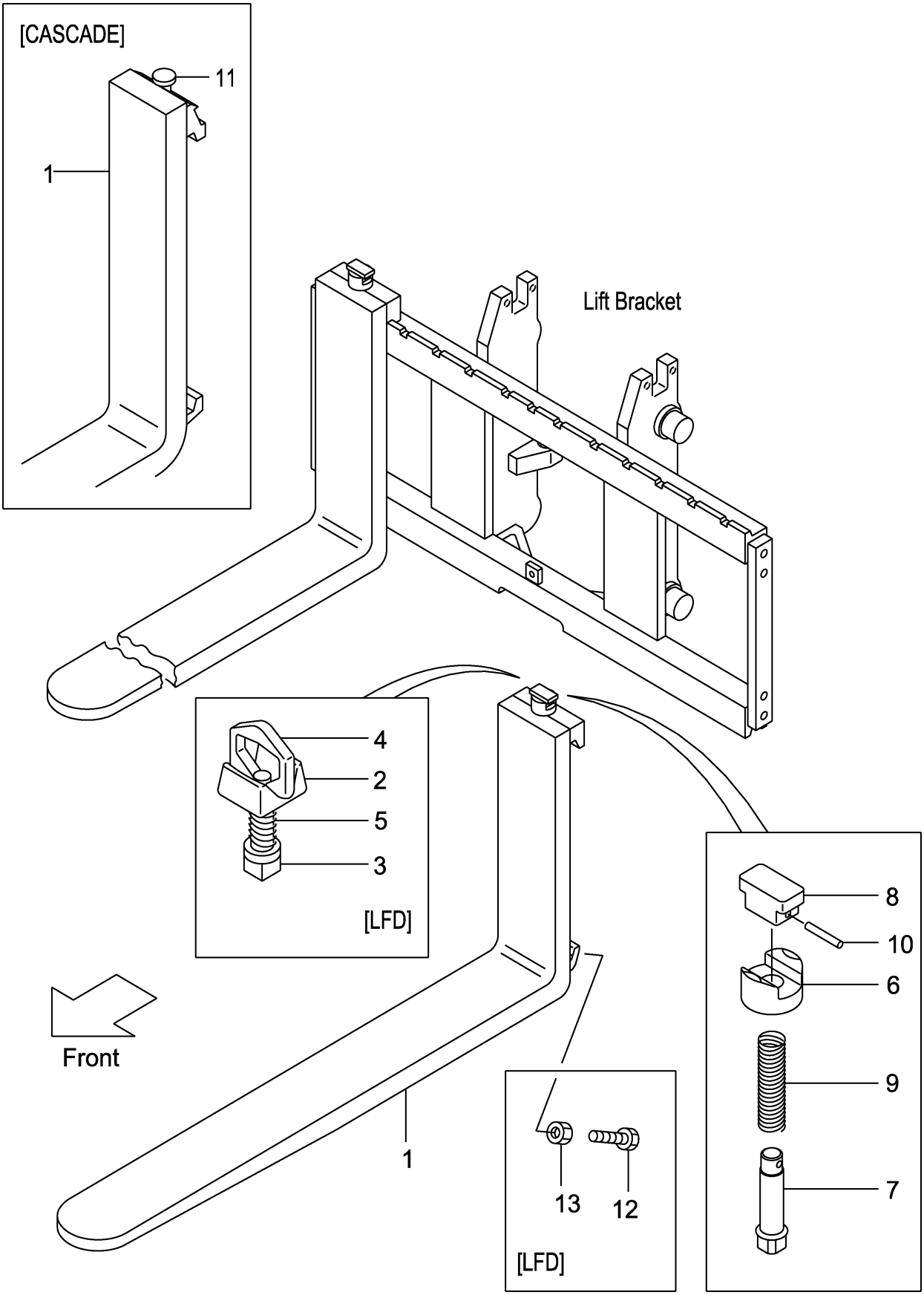

A:VFHM2N4(2T)
B:VFHM2N4(2.5T)

Item No	Part No.	Mark	Description		Req'd	Remarks : Serial No.
-	22N58-10511		FORK	ﾌｫｰｸ	2	[LF107/CASCADE] INC.11
-	22N58-10521		FORK	ﾌｫｰｸ	2	[LF122/CASCADE] INC.11
A1	214A8-11001		STOPPER-ASSY,FORK	ﾌｫｰｸｽﾄｯﾊﾟｱｯｾﾝ	2	[LFD] INC.2-5
2	214A8-12001		HEAD	ﾍｯﾄﾞ	2	[LFD]
3	214A8-12011		STOPPER	ｽﾄｯﾊﾟ	2	[LFD]
4	214A8-12021		HANDLE	ﾊﾝﾄﾞﾙ	2	[LFD]
5	214A8-12031		SPRING	ｽﾌﾟﾘﾝｸﾞ	2	[LFD]
6	216G8-12921		HOLDER	ﾎﾙﾀﾞ	2	[LF]
7	231A8-12001		PIN	ﾋﾟﾝ	2	[LF]
8	231A8-12011		KNOB	ﾉﾌﾞ	2	[LF]
9	231A8-12021		SPRING	ｽﾌﾟﾘﾝｸﾞ	2	[LF]
10	231A8-12031		PIN,SPRING	ﾋﾟﾝ	2	[LF]
11	W-K2PK-M		KIT,PIN,STOPPER	ｽｯﾄﾊﾟﾋﾟﾝｷｯﾄ	2	[CASCADE]
12	216G8-12101		BOLT	ﾎﾞﾙﾄ	4	[LFD]
13	01402-00010		NUT	ﾅｯﾄ	4	[LFD]

M E M O

M E M O

FIG.180 LIFT BRACKET [VFHM2N4]

(M7020920) ﾘﾌﾄﾌﾞﾗｹｯﾄ

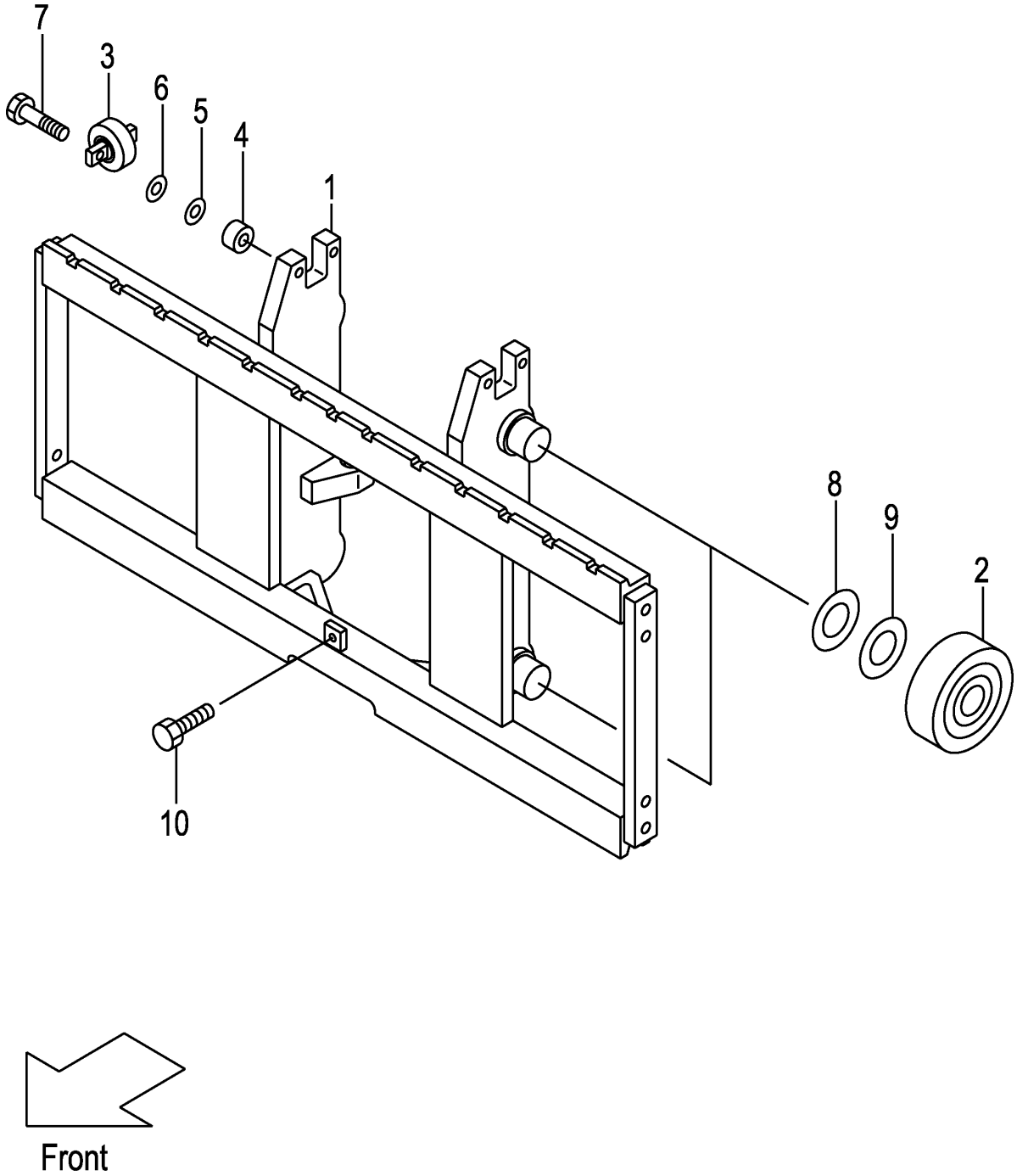

A:VFHM2N4(2T)
B:VFHM2N4(2.5T)

Item No	Part No.	Mark	Description		Req'd	Remarks : Serial No.
1	22N40-90201		BRACKET,LIFT	ﾌﾞﾗｹｯﾄ	1	
2	277P8-22051		ROLLER,END,119.0	ﾛｰﾗ	4	
-	277P8-22061		ROLLER,END,119.5	ﾛｰﾗ	(4)	
3	22N58-32701		ROLLER,SIDE	ﾛｰﾗ	2	
4	22N58-32711		SPACER	ｽﾍﾟｰｻ	4	
5	22018-30261		SHIM	ｼﾑ	4	
6	22018-30121		SHIM	ｼﾑ	4	
7	01103-10045		BOLT	ﾎﾞﾙﾄ	4	
8	277P8-22071		SHIM,T-0.5	ｼﾑ	5	
9	277P8-22081		SHIM,T-1.0	ｼﾑ	5	
10	01184-12025		BOLT & WASHER	ﾎﾞﾙﾄ & ﾜｯｼｬ	1	

FIG.181 BACKREST [VFHM2N4]

(M7028280) ﾊﾞｯｸﾚｽﾄ

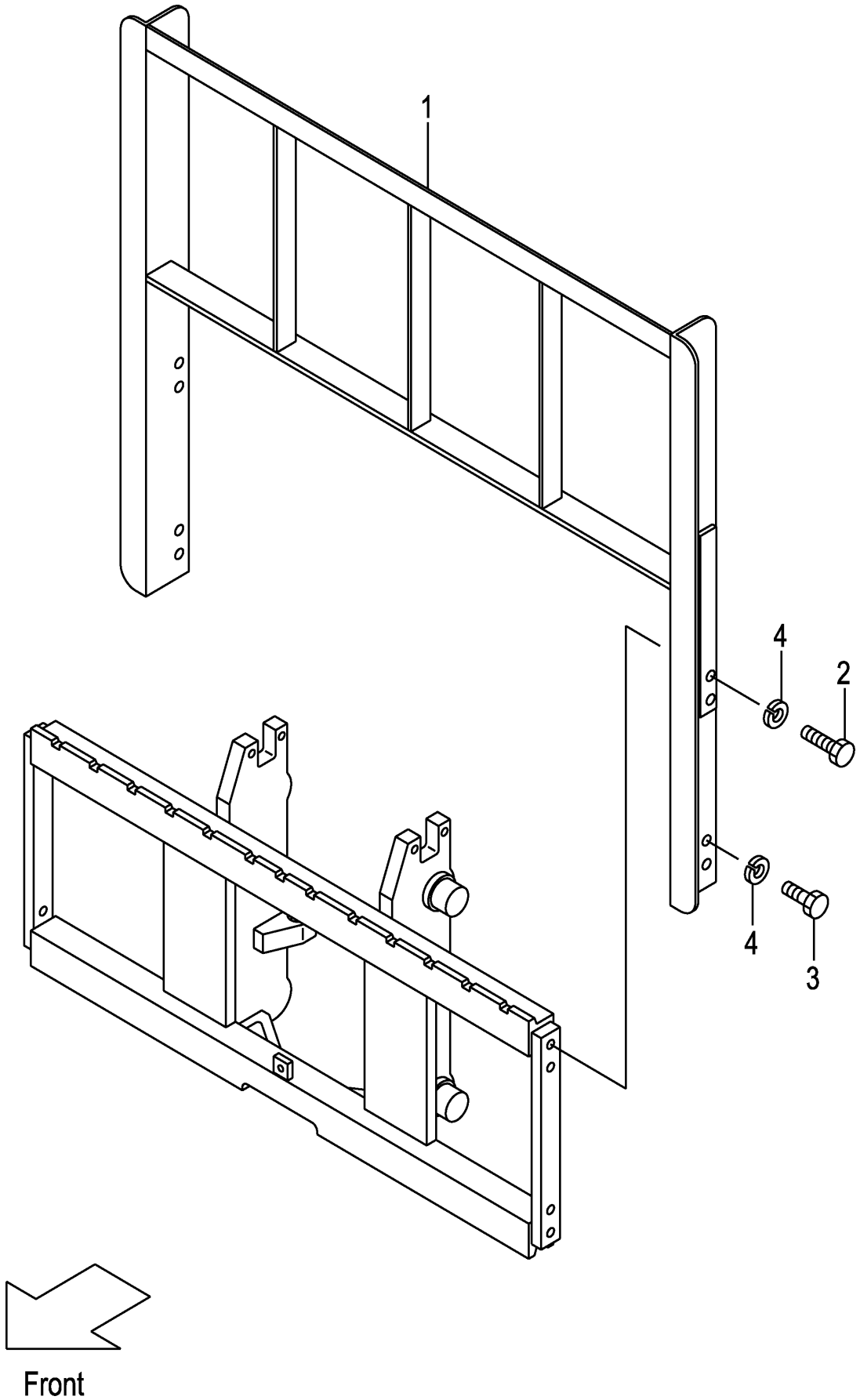

A:VFHM2N4(2T)
B:VFHM2N4(2.5T)

Item No	Part No.	Mark	Description		Req'd	Remarks : Serial No.
1	234A8-22202		BACKREST	ﾊﾞｯｸﾚｽﾄ	1	
2	01100-14030		BOLT	ﾎﾞﾙﾄ	4	
3	01100-14025		BOLT	ﾎﾞﾙﾄ	4	
4	02010-00014		WASHER	ﾜｯｼｬ	8	

FIG.182 MAST [VFHM2N4]

(M7020730) マスト

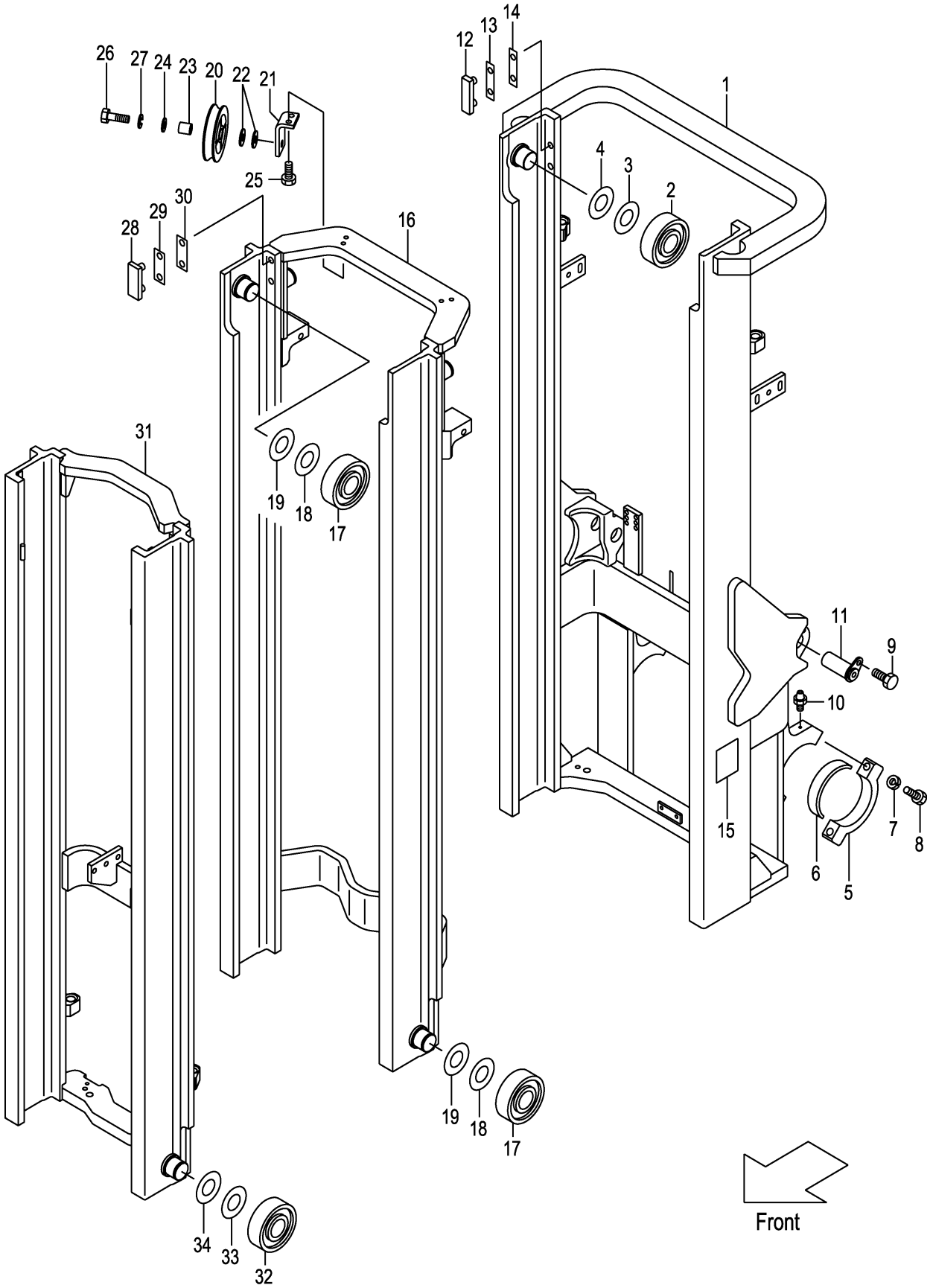

A:VFHM2N4(2T)
B:VFHM2N4(2.5T)

Item No	Part No.	Mark	Description		Req'd	Remarks : Serial No.
1	22N40-70201		MAST,OUTER VFHM435	ｱｳﾀﾏｽﾄ	1	
-	22N40-70231		MAST,OUTER VFHM480	ｱｳﾀﾏｽﾄ	1	
-	22N40-70241		MAST,OUTER VFHM500	ｱｳﾀﾏｽﾄ	1	
-	22N40-70251		MAST,OUTER VFHM540	ｱｳﾀﾏｽﾄ	1	
-	22N40-70261		MAST,OUTER VFHM550	ｱｳﾀﾏｽﾄ	1	
-	52N53-91901		MAST,OUTER VFHM435	ｱｳﾀﾏｽﾄ	1	[EXR][RW][HC]
-	52N53-91931		MAST,OUTER VFHM480	ｱｳﾀﾏｽﾄ	1	[EXR][RW][HC]
-	52N53-91941		MAST,OUTER VFHM500	ｱｳﾀﾏｽﾄ	1	[EXR][RW][HC]
-	52N53-91951		MAST,OUTER VFHM540	ｱｳﾀﾏｽﾄ	1	[EXR][RW][HC]
-	52N53-91961		MAST,OUTER VFHM550	ｱｳﾀﾏｽﾄ	1	[EXR][RW][HC]
2	277P8-22051		ROLLER,END,119.0	ﾛｰﾗ	2	
3	277P8-22071		SHIM,T-0.5	ｼﾑ	12	
4	277P8-22081		SHIM,T-1.0	ｼﾑ	12	
5	277P8-32701		CAP	ｷｬｯﾌﾟ	2	
6	214A8-02201		BUSHING	ﾌﾞｯｼﾝｸﾞ	2	
7	01103-16065		BOLT	ﾎﾞﾙﾄ	4	
8	02011-00016		WASHER	ﾜｯｼｬ	4	
9	216G8-52301		BOLT & WASHER	ﾎﾞﾙﾄ & ﾜｯｼｬ	2	
10	04901-00100		FITTING	ﾌｨｯﾃｨﾝｸﾞ	2	
11	272K8-52201		PIN	ﾋﾟﾝ	2	
12	216G8-33401		SLIPPER	ｽﾘｯﾊﾟ	2	
13	216G8-33361		SHIM,T-0.5	ｼﾑ	8	
14	216G8-33371		SHIM,T-1.0	ｼﾑ	4	
15	23678-06002		PLATE,NAME	ﾌﾟﾚｰﾄ	1	
16	22N40-70401		MAST,MIDDLE VFHM435	ﾐﾄﾞﾙﾏｽﾄ	1	
-	22N40-70431		MAST,MIDDLE VFHM480	ﾐﾄﾞﾙﾏｽﾄ	1	
-	22N40-70441		MAST,MIDDLE VFHM500	ﾐﾄﾞﾙﾏｽﾄ	1	
-	22N40-70451		MAST,MIDDLE VFHM540	ﾐﾄﾞﾙﾏｽﾄ	1	
-	22N40-70461		MAST,MIDDLE VFHM550	ﾐﾄﾞﾙﾏｽﾄ	1	
17	277P8-22051		ROLLER,END,119.0	ﾛｰﾗ	4	
-	277P8-22061		ROLLER,END,119.5	ﾛｰﾗ	(2)	
18	277P8-22071		SHIM,T-0.5	ｼﾑ	15	
19	277P8-22081		SHIM,T-1.0	ｼﾑ	15	
20	63130-15301		PULLEY	ﾌﾟｰﾘ	1	
21	22N40-72191		BRACKET	ﾌﾞﾗｹｯﾄ	1	
22	62050-12331		SPACER	ｽﾍﾟｰｻ	2	
23	214A0-72701		COLLAR	ｶﾗｰ	1	
24	02000-00016		WASHER	ﾜｯｼｬ	1	
25	01184-10025		BOLT	ﾎﾞﾙﾄ	2	
26	01100-16050		BOLT	ﾎﾞﾙﾄ	1	
27	02010-00016		WASHER	ﾜｯｼｬ	1	
28	216G8-33351		SLIPPER	ｽﾘｯﾊﾟ	2	
29	216G8-33361		SHIM,T-0.5	ｼﾑ	4	
30	216G8-33371		SHIM,T-1.0	ｼﾑ	8	
31	22N40-70601		MAST,INNER VFHM435	ｲﾝﾅﾏｽﾄ	1	
-	22N40-70631		MAST,INNER VFHM480	ｲﾝﾅﾏｽﾄ	1	
-	22N40-70641		MAST,INNER VFHM500	ｲﾝﾅﾏｽﾄ	1	
-	22N40-70651		MAST,INNER VFHM540	ｲﾝﾅﾏｽﾄ	1	
-	22N40-70661		MAST,INNER VFHM550	ｲﾝﾅﾏｽﾄ	1	
32	277P8-22051		ROLLER,END,119.0	ﾛｰﾗ	2	

FIG.182 MAST [VFHM2N4]

(M7020730) マスト

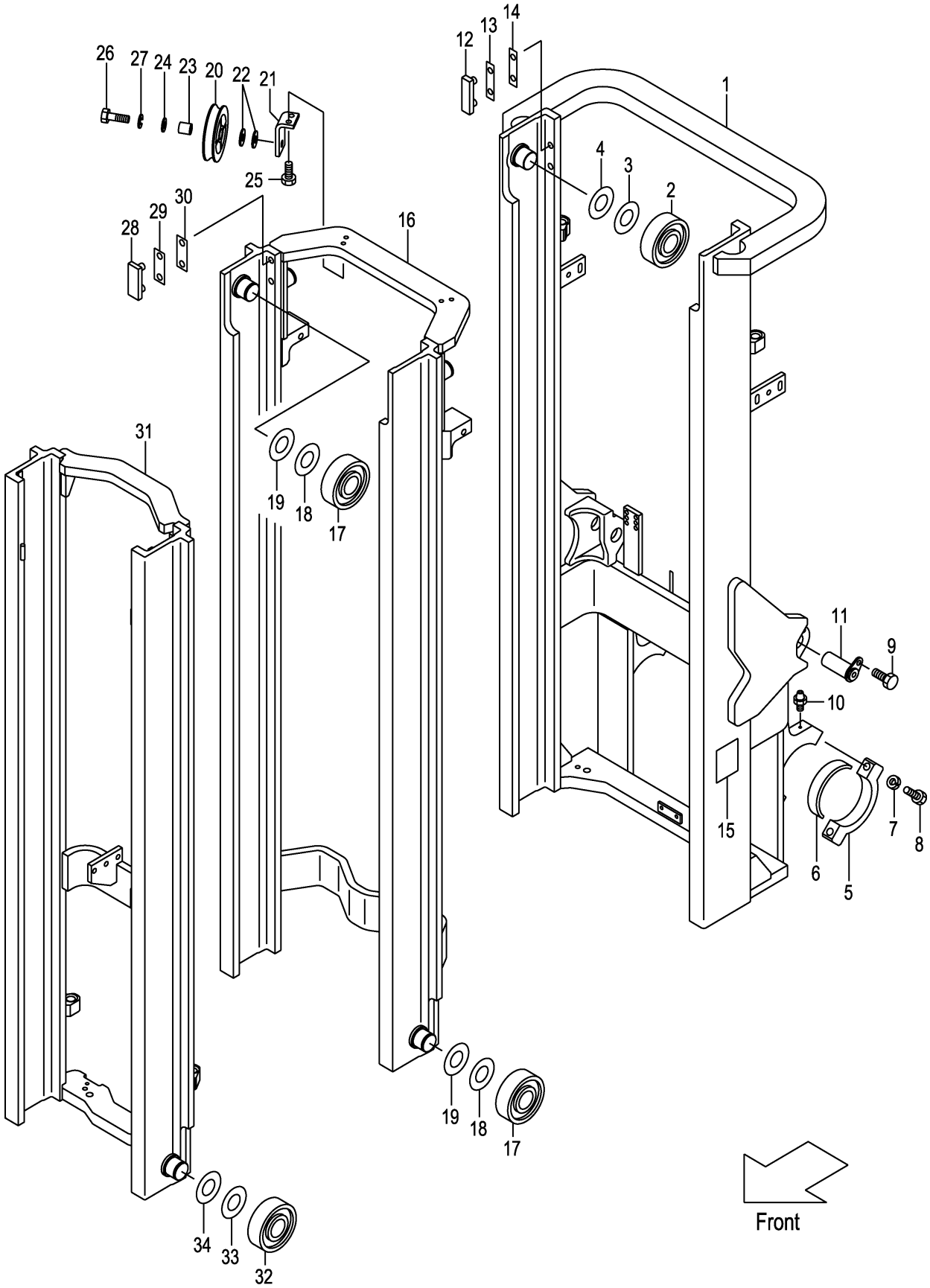

A:VFHM2N4(2T)
B:VFHM2N4(2.5T)

Item No	Part No.	Mark	Description	Req'd	Remarks : Serial No.
-	277P8-22061		ROLLER,END,119.5 ﾛｰﾗ	(2)	
33	277P8-22071		SHIM,T-0.5 ｼﾑ	12	
34	277P8-22081		SHIM,T-1.0 ｼﾑ	12	

M E M O

M E M O

FIG.183 LIFT CYLINDER (FRONT) [VFHM2N4]

(M7020840) リフトシリンダ(フロント)

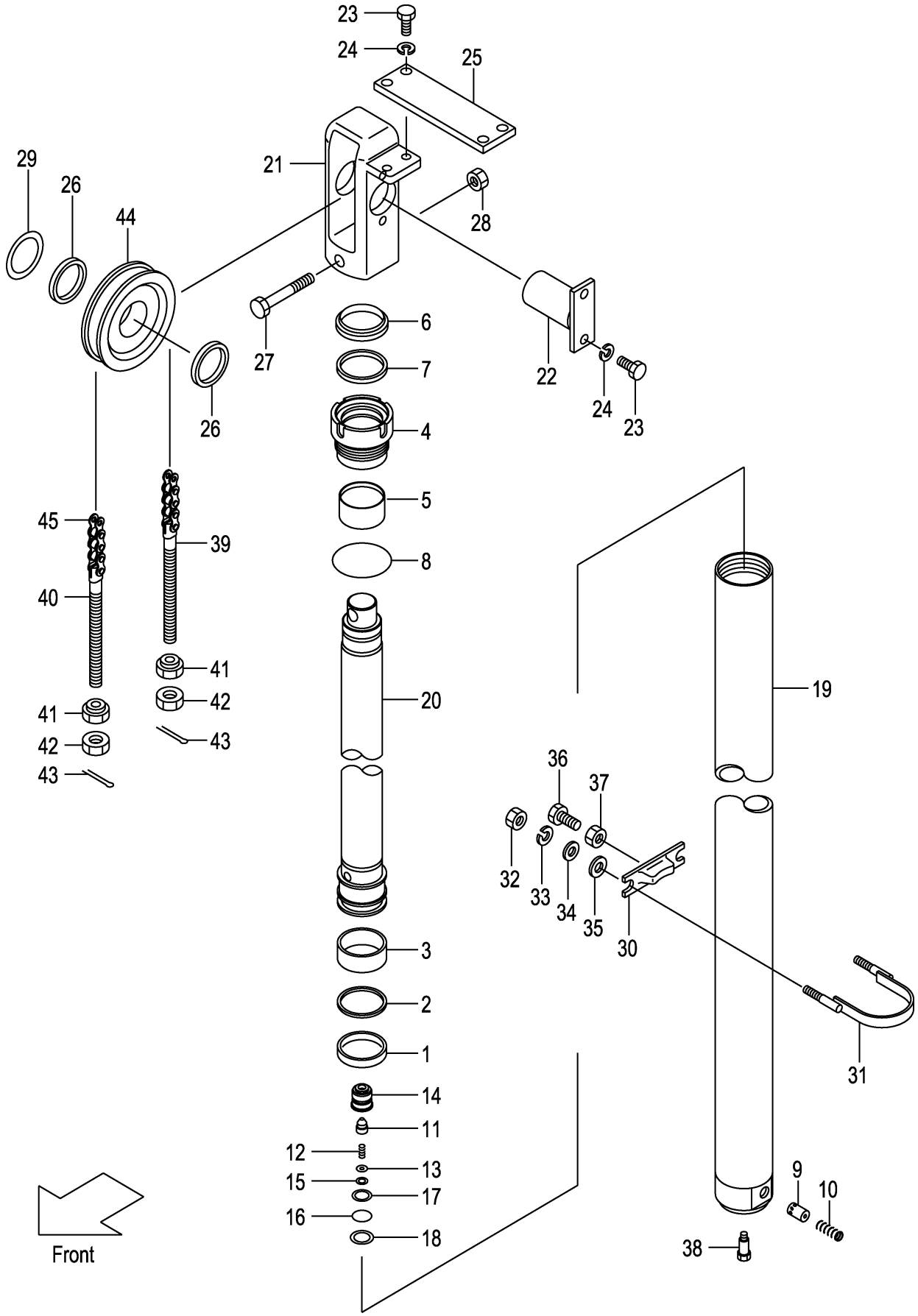

A:VFHM2N4(2T)
B:VFHM2N4(2.5T)

Item No	Part No.	Mark	Description		Req'd	Remarks : Serial No.
A1	22N40-50201		CYL-ASSY,LIFT VFHM435	ﾘﾌﾄｼﾘﾝﾀﾞｱｯｾﾝ	2	INC.1-20
-	22N40-50221		CYL-ASSY,LIFT VFHM480	ﾘﾌﾄｼﾘﾝﾀﾞｱｯｾﾝ	2	INC.1-20
-	22N40-50231		CYL-ASSY,LIFT VFHM500	ﾘﾌﾄｼﾘﾝﾀﾞｱｯｾﾝ	2	INC.1-20
-	22N40-50261		CYL-ASSY,LIFT VFHM540	ﾘﾌﾄｼﾘﾝﾀﾞｱｯｾﾝ	2	INC.1-20
-	22N40-80261		CYL-ASSY,LIFT VFHM550	ﾘﾌﾄｼﾘﾝﾀﾞｱｯｾﾝ	2	INC.1-20
1	27978-42411		PACKING	ﾊﾟｯｷﾝｸﾞ	2	
2	24459-42291		RING,BACK-UP	ﾘﾝｸﾞ	2	
3	27978-42421		WEARING	ｳｪｱﾘﾝｸﾞ	2	
4	232L8-42601		CAP,CYL	ｷｬｯﾌﾟ	2	
5	232L8-42621		BUSHING	ﾌﾞｯｼﾝｸﾞ	2	
6	214J8-46001		SEAL,DUST	ｼｰﾙ	2	
7	214J8-42721		PACKING	ﾊﾟｯｷﾝｸﾞ	2	
8	232L8-42631		O-RING	Oﾘﾝｸﾞ	2	
9	24320-55001		PISTON	ﾋﾟｽﾄﾝ	2	
10	27978-42601		SPRING	ｽﾌﾟﾘﾝｸﾞ	2	
A2	214T0-83501		VALVE-ASSY,CHECK	ﾁｪｯｸﾊﾞﾙﾌﾞｱｯｾﾝ	2	INC.11-15
11	214T0-83521		POPPET	ﾎﾟﾍﾟｯﾄ	2	
12	214T0-83541		SPRING	ｽﾌﾟﾘﾝｸﾞ	2	
13	214T0-83531		PLATE	ﾌﾟﾚｰﾄ	2	
14	214T0-83511		CASE	ｹｰｽ	2	
15	02110-00014		RING,SNAP	ｽﾅｯﾌﾟﾘﾝｸﾞ	2	
16	03320-00210		O-RING	Oﾘﾝｸﾞ	2	
17	03360-00210		RING,BACK-UP	ﾘﾝｸﾞ	2	
18	02110-00028		RING,SNAP	ｽﾅｯﾌﾟﾘﾝｸﾞ	2	
19	22N40-50601		BODY,CYL VFHM435	ﾎﾞﾃﾞｨ	2	
-	22N40-50621		BODY,CYL VFHM480	ﾎﾞﾃﾞｨ	2	
-	22N40-50631		BODY,CYL VFHM500	ﾎﾞﾃﾞｨ	2	
-	22N40-50661		BODY,CYL VFHM540	ﾎﾞﾃﾞｨ	2	
-	22N40-80661		BODY,CYL VFHM550	ﾎﾞﾃﾞｨ	2	
20	22N40-50401		ROD,PISTON VFHM360	ﾛｯﾄﾞ	2	
-	22N40-50421		ROD,PISTON VFHM400	ﾛｯﾄﾞ	2	
-	22N40-50431		ROD,PISTON VFHM435	ﾛｯﾄﾞ	2	
-	22N40-50461		ROD,PISTON VFHM480	ﾛｯﾄﾞ	2	
-	22N40-80461		ROD,PISTON VFHM500	ﾛｯﾄﾞ	2	
21	22N40-74301		HEAD,PISTON	ﾍｯﾄﾞ	2	
22	22N40-74501		PIN,ANCHOR	ﾋﾟﾝ	2	
23	01103-10020		BOLT	ﾎﾞﾙﾄ	8	
24	02011-00010		WASHER	ﾜｯｼｬ	8	
25	22N40-74311		PLATE	ﾌﾟﾚｰﾄ	1	
26	229G0-52251		SPACER	ｽﾍﾟｰｻ	4	
27	01100-12080		BOLT	ﾎﾞﾙﾄ	2	
28	01402-00012		NUT	ﾅｯﾄ	2	
29	224T8-52291		SHIM	ｼﾑ	2	
30	22N58-43011		SUPPORT,CYL	ｻﾎﾟｰﾄ	2	
31	22N40-72311		U-BOLT	Uﾎﾞﾙﾄ	2	
32	278R0-63151		NUT	ﾅｯﾄ	4	
33	02010-00008		WASHER	ﾜｯｼｬ	4	
34	02000-00008		WASHER	ﾜｯｼｬ	4	
35	02000-00010		WASHER	ﾜｯｼｬ	4	
36	232A8-42201		BOLT	ﾎﾞﾙﾄ	2	

FIG.183 LIFT CYLINDER (FRONT) [VFHM2N4]

(M7020840) リフトシリンダ(フロント)

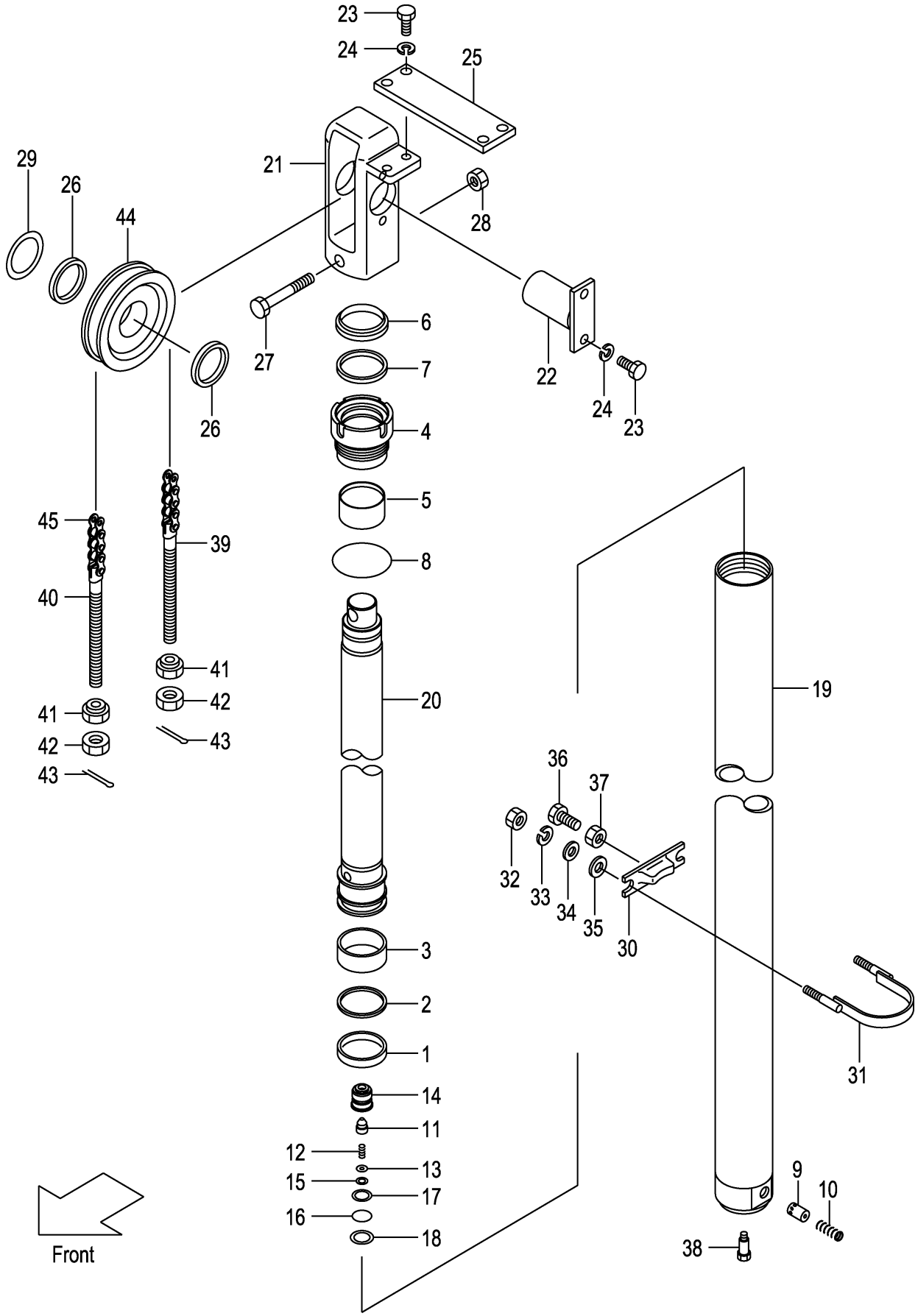

A:VFHM2N4(2T)
B:VFHM2N4(2.5T)

Item No	Part No.	Mark	Description		Req'd	Remarks : Serial No.
37	234A8-42571		NUT	ﾅｯﾄ	2	
38	214A8-42661		BOLT	ﾎﾞﾙﾄ	2	
39	52672-72231		PIN,ANCHOR	ﾋﾟﾝ	2	
40	23679-45801		PIN,ANCHOR	ﾋﾟﾝ	2	
41	22218-40191		NUT	ﾅｯﾄ	4	
42	01400-00018		NUT	ﾅｯﾄ	4	
43	02200-03030		PIN	ﾋﾟﾝ	4	
44	234A8-43501		SHEAVE	ｼｰﾌﾞ	2	
45	22679-45731		CHAIN,LEAF VFHM435	ﾁｪｰﾝ	2	
-	22679-45811		CHAIN,LEAF VFHM480	ﾁｪｰﾝ	2	
-	22679-45851		CHAIN,LEAF VFHM500	ﾁｪｰﾝ	2	
-	22679-45931		CHAIN,LEAF VFHM540	ﾁｪｰﾝ	2	
-	22679-45951		CHAIN,LEAF VFHM550	ﾁｪｰﾝ	2	

M E M O

M E M O

FIG.184 LIFT CYLINDER (REAR) [VFHM2N4]

(M7020850) リフトシリンダ(リヤー)

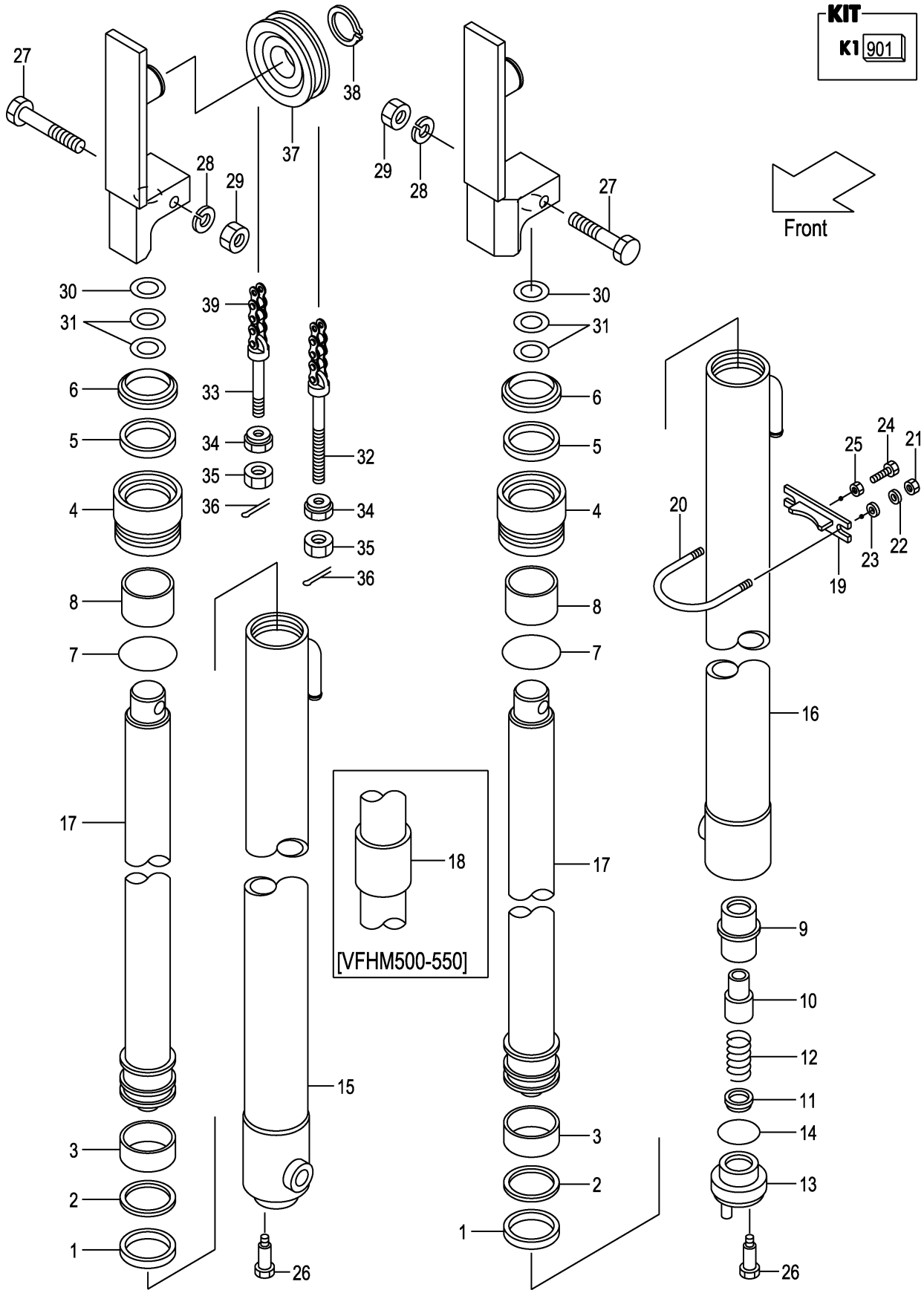

A:VFHM2N4(2T)
B:VFHM2N4(2.5T)

Item No	Part No.	Mark	Description		Req'd	Remarks : Serial No.
A1	277P0-81702		CYL-ASSY,LIFT,RH VFHM435	ﾘﾌﾄｼﾘﾝﾀﾞｱｯｾﾝ	1	INC.1-8,15,17
-	277P0-81732		CYL-ASSY,LIFT,RH VFHM480	ﾘﾌﾄｼﾘﾝﾀﾞｱｯｾﾝ	1	INC.1-8,15,17
-	277P0-81742		CYL-ASSY,LIFT,RH VFHM500	ﾘﾌﾄｼﾘﾝﾀﾞｱｯｾﾝ	1	INC.1-8,15,17,18
-	277P0-81752		CYL-ASSY,LIFT,RH VFHM540	ﾘﾌﾄｼﾘﾝﾀﾞｱｯｾﾝ	1	INC.1-8,15,17,18
-	277P0-81762		CYL-ASSY,LIFT,RH VFHM550	ﾘﾌﾄｼﾘﾝﾀﾞｱｯｾﾝ	1	INC.1-8,15,17,18
A2	277P0-81902		CYL-ASSY,LIFT,LH VFHM435	ﾘﾌﾄｼﾘﾝﾀﾞｱｯｾﾝ	1	INC.1-14,16,17
-	277P0-81932		CYL-ASSY,LIFT,LH VFHM480	ﾘﾌﾄｼﾘﾝﾀﾞｱｯｾﾝ	1	INC.1-14,16,17
-	277P0-81942		CYL-ASSY,LIFT,LH VFHM500	ﾘﾌﾄｼﾘﾝﾀﾞｱｯｾﾝ	1	INC.1-14,16,17,18
-	277P0-81952		CYL-ASSY,LIFT,LH VFHM540	ﾘﾌﾄｼﾘﾝﾀﾞｱｯｾﾝ	1	INC.1-14,16,17,18
-	277P0-81962		CYL-ASSY,LIFT,LH VFHM550	ﾘﾌﾄｼﾘﾝﾀﾞｱｯｾﾝ	1	INC.1-14,16,17,18
901	277P0-89811	K1	KIT,OVERHAUL	ｵｰﾊﾞﾎｰﾙｷｯﾄ	2	INC.1-3,5-7
1	23650-83521	*	PACKING	ﾊﾟｯｷﾝｸﾞ	2	
2	23650-83531	*	RING,BACK-UP	ﾘﾝｸﾞ	2	
3	27970-53141	*	WEARING	ｳｪｱﾘﾝｸﾞ	2	
4	232A8-42601		CAP,CYL	ｷｬｯﾌﾟ	2	
5	214A8-42721	*	PACKING	ﾊﾟｯｷﾝｸﾞ	2	
6	214A8-46001	*	SEAL,DUST	ｼｰﾙ	2	
7	232A8-42631	*	O-RING	Oﾘﾝｸﾞ	2	
8	232A8-42621		BUSHING	ﾌﾞｯｼﾝｸﾞ	2	
9	53658-43021		SLEEVE	ｽﾘｰﾌﾞ	1	(LH)
10	53658-43011		PISTON	ﾋﾟｽﾄﾝ	1	(LH)
11	53658-43001		VALVE,CHECK	ﾊﾞﾙﾌﾞ	1	(LH)
12	53658-43031		SPRING	ｽﾌﾟﾘﾝｸﾞ	1	(LH)
13	53658-43041		PLUG	ﾌﾟﾗｸﾞ	1	(LH)
14	03320-00340		O-RING	Oﾘﾝｸﾞ	1	(LH)
15	277P0-81302		BODY,CYL,RH VFHM435	ﾎﾞﾃﾞｨ	1	
-	277P0-81332		BODY,CYL,RH VFHM480	ﾎﾞﾃﾞｨ	1	
-	277P0-81342		BODY,CYL,RH VFHM500	ﾎﾞﾃﾞｨ	1	
-	277P0-81352		BODY,CYL,RH VFHM540	ﾎﾞﾃﾞｨ	1	
-	277P0-81362		BODY,CYL,RH VFHM550	ﾎﾞﾃﾞｨ	1	
16	277P0-81502		BODY,CYL,LH VFHM435	ﾎﾞﾃﾞｨ	1	
-	277P0-81532		BODY,CYL,LH VFHM480	ﾎﾞﾃﾞｨ	1	
-	277P0-81542		BODY,CYL,LH VFHM500	ﾎﾞﾃﾞｨ	1	
-	277P0-81552		BODY,CYL,LH VFHM540	ﾎﾞﾃﾞｨ	1	
-	277P0-81562		BODY,CYL,LH VFHM550	ﾎﾞﾃﾞｨ	1	
17	277P0-81101		ROD,PISTON VFHM435	ﾛｯﾄﾞ	2	
-	277P0-81131		ROD,PISTON VFHM480	ﾛｯﾄﾞ	2	
-	277P0-81141		ROD,PISTON VFHM500	ﾛｯﾄﾞ	2	
-	277P0-81151		ROD,PISTON VFHM540	ﾛｯﾄﾞ	2	
-	277P0-81161		ROD,PISTON VFHM550	ﾛｯﾄﾞ	2	

FIG.184 LIFT CYLINDER (REAR) [VFHM2N4]

(M7020850) リフトシリンダ(リヤー)

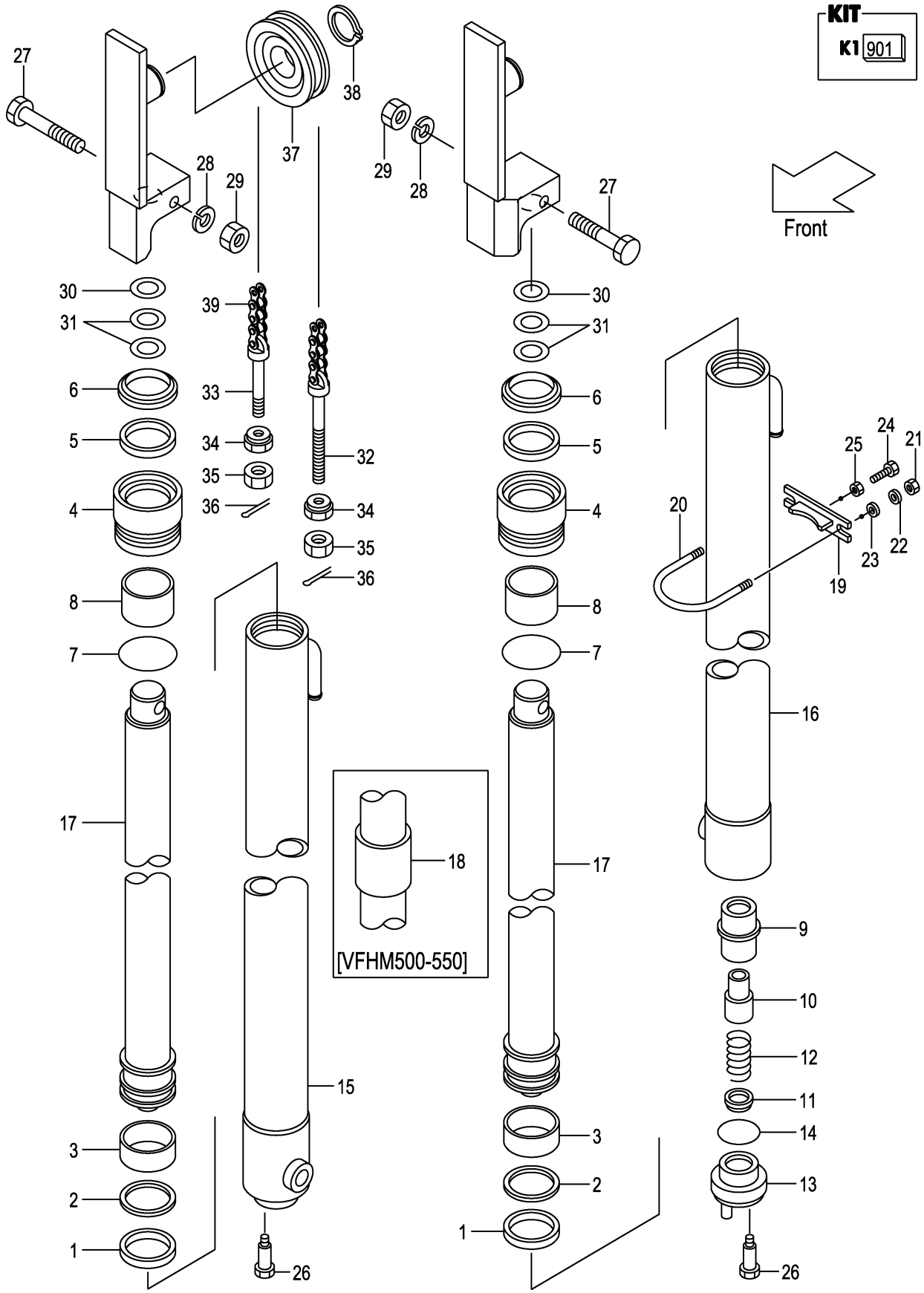

A:VFHM2N4(2T)
B:VFHM2N4(2.5T)

Item No	Part No.	Mark	Description		Req'd	Remarks : Serial No.
18	23650-83561		SPACER VFHM500	ｽﾍﾟｰｻ	2	
-	23650-83551		SPACER VFHM540	ｽﾍﾟｰｻ	2	
-	23650-83561		SPACER VFHM550	ｽﾍﾟｰｻ	2	
19	22N58-43011		SUPPORT,CYL	ｻﾎﾟｰﾄ	2	
20	234A8-42551		U-BOLT	Uﾎﾞﾙﾄ	2	
21	01400-00010		NUT	ﾅｯﾄ	4	
22	02010-20010		WASHER	ﾜｯｼｬ	4	
23	02000-20010		WASHER	ﾜｯｼｬ	4	
24	01120-12040		BOLT	ﾎﾞﾙﾄ	2	
25	01402-00012		NUT	ﾅｯﾄ	2	
26	214A8-42661		BOLT	ﾎﾞﾙﾄ	2	
27	01100-12070		BOLT	ﾎﾞﾙﾄ	2	
28	02010-00012		WASHER	ﾜｯｼｬ	2	
29	01400-00012		NUT	ﾅｯﾄ	2	
30	23917-42191		SHIM,T-1.0	ｼﾑ	10	
31	22679-43831		SHIM,T-0.5	ｼﾑ	10	
32	52672-72231		PIN,ANCHOR	ﾋﾟﾝ	2	
33	23500-82001		PIN,ANCHOR	ﾋﾟﾝ	2	
34	22218-40191		NUT	ﾅｯﾄ	4	
35	01400-00018		NUT	ﾅｯﾄ	4	
36	02200-03030		PIN	ﾋﾟﾝ	4	
37	234A8-43501		SHEAVE	ｼｰﾌﾞ	2	
38	02100-00040		RING,SNAP	ｽﾅｯﾌﾟﾘﾝｸﾞ	2	
39	22679-45991		CHAIN,LEAF VFHM435	ﾁｪｰﾝ	2	
-	22679-46071		CHAIN,LEAF VFHM480	ﾁｪｰﾝ	2	
-	22679-46111		CHAIN,LEAF VFHM500	ﾁｪｰﾝ	2	
-	22679-46191		CHAIN,LEAF VFHM540	ﾁｪｰﾝ	2	
-	22679-46211		CHAIN,LEAF VFHM550	ﾁｪｰﾝ	2	

M E M O

M E M O

FIG.185 MAST PIPING [VFHM2N4]

(M7020860) マストパイピング

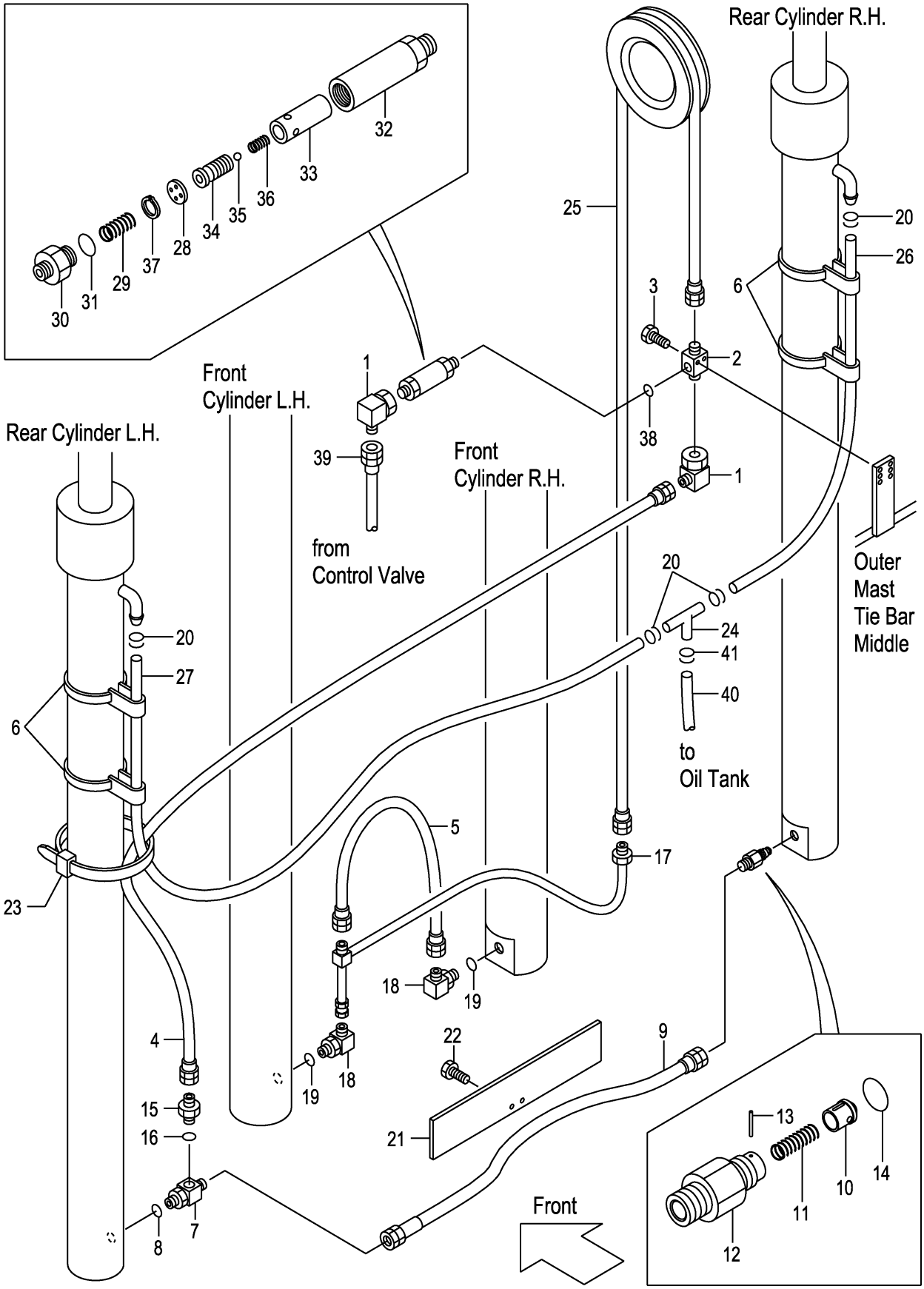

A:VFHM2N4(2T)
B:VFHM2N4(2.5T)

Item No	Part No.	Mark	Description		Req'd	Remarks : Serial No.
1	62150-14321		ELBOW	ｴﾙﾎﾞ	2	
2	229F0-94101		THREE-WAY	ｽﾘｰｳｪｲ	1	
3	01184-10040		BOLT	ﾎﾞﾙﾄ	2	
4	22N40-82221		HOSE	ﾎｰｽ	1	
5	22N40-82201		HOSE	ﾎｰｽ	1	
6	22N58-45001		BAND	ﾊﾞﾝﾄﾞ	2	
A1	216G0-93101		THREE-WAY-ASSY	ｽﾘｰｳｪｲｱｯｾﾝ	1	INC.7,8
7	NO PART NO.	#	THREE-WAY	ｽﾘｰｳｪｲ	1	
8	03320-00140		O-RING	Oﾘﾝｸﾞ	1	
9	22N50-92101		HOSE	ﾎｰｽ	1	
A2	234A8-40701		VALVE-ASSY,CUT	ｶｯﾄﾊﾞﾙﾌﾞｱｯｾﾝ	1	INC.10-14
10	234A8-42602		PISTON	ﾋﾟｽﾄﾝ	1	
11	234A8-42611		SPRING	ｽﾌﾟﾘﾝｸﾞ	1	
12	234A8-42622		NIPPLE	ﾆｯﾌﾟﾙ	1	
13	02270-01014		PIN	ﾋﾟﾝ	1	
14	03320-00140		O-RING	Oﾘﾝｸﾞ	1	
A3	04134-20404		NIPPLE-ASSY	ﾆｯﾌﾟﾙｱｯｾﾝ	1	INC.15,16
15	NO PART NO.	#	NIPPLE	ﾆｯﾌﾟﾙ	1	
16	03320-00180		O-RING	Oﾘﾝｸﾞ	1	
17	22N40-81001		PIPE	ﾊﾟｲﾌﾟ	1	
A4	22N40-81091		ELBOW-ASSY	ｴﾙﾎﾞｱｯｾﾝ	2	INC.18,19
18	NO PART NO.	#	ELBOW	ｴﾙﾎﾞ	2	
19	03320-00180		O-RING	Oﾘﾝｸﾞ	2	
20	24329-46201		CLIP	ｸﾘｯﾌﾟ	4	
21	22N40-82251		PLATE	ﾌﾟﾚｰﾄ	1	
22	01183-08016		BOLT	ﾎﾞﾙﾄ	2	
23	25790-94021		BAND,HOSE	ﾊﾞﾝﾄﾞ	3	
24	53675-55051		THREE-WAY	ｽﾘｰｳｪｲ	1	
25	04601-44283		HOSE VFHM435	ﾎｰｽ	1	
-	04601-44312		HOSE VFHM480	ﾎｰｽ	1	
-	04601-44332		HOSE VFHM500	ﾎｰｽ	1	
-	04601-44356		HOSE VFHM540	ﾎｰｽ	1	
-	04601-44364		HOSE VFHM550	ﾎｰｽ	1	
26	04710-04160		HOSE,RH VFHM435	ﾎｰｽ	1	
-	04710-04175		HOSE,RH VFHM480	ﾎｰｽ	1	
-	04710-04185		HOSE,RH VFHM500	ﾎｰｽ	1	
-	04710-04200		HOSE,RH VFHM540	ﾎｰｽ	1	
-	04710-04205		HOSE,RH VFHM550	ﾎｰｽ	1	
27	04710-04165		HOSE,LH VFHM435	ﾎｰｽ	1	
-	04710-04180		HOSE,LH VFHM480	ﾎｰｽ	1	
-	04710-04190		HOSE,LH VFHM500	ﾎｰｽ	1	
-	04710-04205		HOSE,LH VFHM540	ﾎｰｽ	1	
-	04710-04210		HOSE,LH VFHM550	ﾎｰｽ	1	
A5	234A8-41001		REGULATOR-ASSY,FLOW	ﾌﾛｰﾚｷﾞｭﾚｰﾀｱｯｾﾝ	1	INC.28-37
28	NO PART NO.	#	PLATE	ﾌﾟﾚｰﾄ	1	
29	27979-43101		SPRING	ｽﾌﾟﾘﾝｸﾞ	1	
30	NO PART NO.	#	NIPPLE	ﾆｯﾌﾟﾙ	1	
31	03300-00280		O-RING	Oﾘﾝｸﾞ	1	
32	NO PART NO.	#	CASE	ｹｰｽ	1	
33	NO PART NO.	#	SLEEVE	ｽﾘｰﾌﾞ	1	

FIG.185 MAST PIPING [VFHM2N4]

(M7020860) マストパイピング

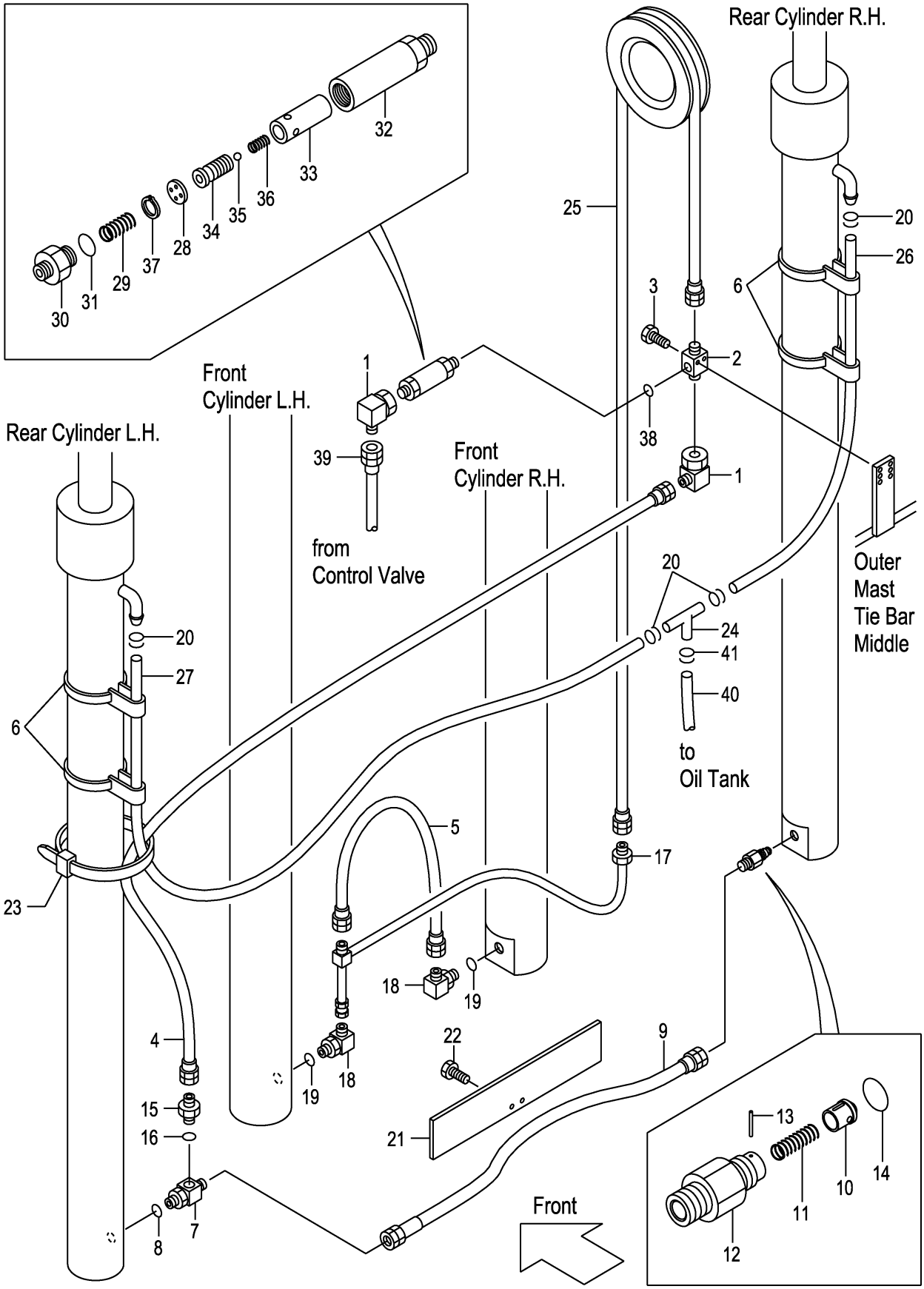

A:VFHM2N4(2T)
B:VFHM2N4(2.5T)

Item No	Part No.	Mark	Description		Req'd	Remarks : Serial No.
34	NO PART NO.	#	PISTON	ﾋﾟｽﾄﾝ	1	
35	24459-42951		BALL,NYLON	ﾎﾞｰﾙ	1	
36	214A8-44151		SPRING	ｽﾌﾟﾘﾝｸﾞ	1	
37	02110-00018		RING,SNAP	ｽﾅｯﾌﾟﾘﾝｸﾞ	1	
38	03320-00180		O-RING	Oﾘﾝｸﾞ	1	
39	22N40-82801		HOSE	ﾎｰｽ	1	
40	04710-04150		HOSE	ﾎｰｽ	1	
41	24329-46201		CLIP	ｸﾘｯﾌﾟ	2	

PARTS NUMBER INDEX

Part No.	Fig.No.	Part No.	Fig.No.	Part No.	Fig.No.	Part No.	Fig.No.
B-B6111-40022	177	B-B6717-92601	168	B-30131-50018	177	B-6567-08102	161
B-B6111-40022	177	B-B6717-92602	168	B-30131-55009	168	B-6567-08201	161
B-B6111-40023	177	B-B6717-92701	168	B-30131-55009	176	B-6567-08202	161
B-B6111-40026	177	B-B6717-92702	168	B-30141-91049	161	B-6567-08301	161
B-B6111-40034	177	B-B6717-92801	168	B-30161-50046	161	B-6567-08302	161
B-B6121-75007	168	B-B6717-92802	168	B-30161-50046	177	B-6567-08401	161
B-B6121-75007	176	B-B6717-92901	168	B-30161-91774	161	B-6567-08402	161
B-B6181-75007	168	B-B6717-92902	168	B-30161-91774	177	B-6567-08501	161
B-B6181-75007	176	B-B6717-93001	168	B-30191-40025	161	B-6567-08502	161
B-B6521-90004	168	B-B6717-93002	168	B-30191-40025	177	B-6567-08601	161
B-B6521-90004	176	B-B6717-93101	168	B-30191-55050	168	B-6567-08602	161
B-B6551-91008	161	B-B6717-93102	168	B-30191-55050	176	B-6567-08701	161
B-B6567-10601	177	B-B6717-93201	168	B-30461-50039	161	B-6567-08702	161
B-B6567-10602	177	B-B6717-93202	168	B-30461-50039	177	B-6567-08801	161
B-B6567-10701	177	B-B6717-93301	168	B-3050A-00093	161	B-6567-08802	161
B-B6567-10702	177	B-B6717-93302	168	B-3050A-00093	177	B-6567-08901	161
B-B6567-10801	177	B-B6717-93401	168	B-3050B-00119	161	B-6567-08902	161
B-B6567-10802	177	B-B6717-93402	168	B-3050B-00119	177	B-6567-09001	161
B-B6567-10901	177	B-B6717-93501	168	B-30961-04012	161	B-6567-09002	161
B-B6567-10902	177	B-B6717-93502	168	B-30961-04012	177	B-6567-09101	161
B-B6567-11001	177	B-B6717-93601	168	B-30961-55013	168	B-6567-09102	161
B-B6567-11002	177	B-B6717-93602	168	B-30961-55013	176	B-6567-09201	161
B-B6567-11101	177	B-B6717-93701	168	B-402-00704-13	136	B-6567-09202	161
B-B6567-11102	177	B-B6717-93702	168	B-402-00704-13	137	B-6567-09301	161
B-B6567-11201	177	B-B6717-93801	168	B-402-00704-13	138	B-6567-09302	161
B-B6567-11202	177	B-B6717-93802	168	B-402-00704-13	139	B-6567-09401	161
B-B6567-11301	177	B-B6717-93901	168	B-402-30905-02	136	B-6567-09402	161
B-B6567-11302	177	B-B6717-93902	168	B-402-30905-03	137	B-6567-09501	161
B-B6567-11401	177	B-B6717-94001	168	B-402-30905-04	138	B-6567-09502	161
B-B6567-11402	177	B-B6717-94002	168	B-402-30905-05	139	B-6567-09601	161
B-B6567-11501	177	B-B6717-94101	168	B-402-36066	136	B-6567-09602	161
B-B6567-11502	177	B-B6717-94102	168	B-402-36066	137	B-6567-09701	161
B-B6567-11601	177	B-B6717-94201	168	B-402-36066	138	B-6567-09702	161
B-B6567-11602	177	B-B6717-94202	168	B-402-36066	139	B-6567-09801	161
B-B6711-00001	168	B-B6717-94301	168	B-402-36067	136	B-6567-09802	161
B-B6711-00001	176	B-B6717-94302	168	B-402-36067	137	B-6567-09901	161
B-B6717-87601	176	B-B675A-00006	168	B-402-36067	138	B-6567-09902	161
B-B6717-87602	176	B-B675A-00006	176	B-402-36067	139	B-94721-22101	168
B-B6717-87701	176	B-B675B-00003	168	B-402-36151	136	B-94721-22101	176
B-B6717-87702	176	B-B675B-00003	176	B-402-36151	137	B-95123-07000	168
B-B6717-87801	176	B-B6983-75007	168	B-402-36151	138	B-95123-07000	176
B-B6717-87802	176	B-B6983-75007	176	B-402-36151	139	B-95151-04000	177
B-B6717-87901	176	B-C4300-22001	168	B-402-36603	136	B-95151-07500	168
B-B6717-87902	176	B-C4300-22001	176	B-402-36603	137	B-95151-07500	176
B-B6717-88001	176	B-023-06632-41	136	B-402-36603	138	BK-7341006000	60
B-B6717-88002	176	B-023-06632-41	137	B-402-36603	139	BK-8059061000	60
B-B6717-88101	176	B-023-06632-41	138	B-402-36924	137	BK-8104209010	60
B-B6717-88102	176	B-023-06632-41	139	B-402-36924	138	BK-81431A4700	60
B-B6717-88201	168	B-026-50103	136	B-402-36924	139	C-11452-2N0-C	153
B-B6717-88201	176	B-026-50103	137	B-402-37128	136	C-11452-2N0-C	155
B-B6717-88202	168	B-026-50103	138	B-402-37128	137	C-11452-2N0-E	153
B-B6717-88202	176	B-026-50103	139	B-402-37128	138	C-11452-2N0-E	155
B-B6717-88301	176	B-26570-30115	168	B-402-37128	139	C-11452-2N5-D	153
B-B6717-88302	176	B-26570-30115	176	B-402-37129	136	C-11452-2N5-D	154
B-B6717-88401	176	B-30096-02207	177	B-402-37129	137	R-402-00710-12	135
B-B6717-88402	176	B-30121-50102	161	B-402-37129	138	R-402-65004-41	135
B-B6717-88501	176	B-30121-50102	177	B-402-37129	139	R-403-21988	135
B-B6717-88502	176	B-30131-40017	161	B-6111-40022	161	W-K2PK-M	157
B-B6717-88601	176	B-30131-40017	177	B-6111-40024	161	W-K2PK-M	163
B-B6717-88602	176	B-30131-50018	161	B-6567-08101	161	W-K2PK-M	171

PARTS NUMBER INDEX

Part No.	Fig.No.	Part No.	Fig.No.	Part No.	Fig.No.	Part No.	Fig.No.
W-K2PK-M	179	01100-16020	122	01181-08016	124	01184-12025	167
Z-8-94132-674-0	10	01100-16040	97	01181-08025	12	01184-12025	172
Z-8-94132-675-0	10	01100-16045	75	01183-06010	19	01184-12025	175
Z-8-94367-294-0	10	01100-16050	182	01183-06010	20	01184-12025	175
Z-8-94367-956-0	10	01100-16060	174	01183-06010	107	01184-12025	175
Z-8-94367-957-0	10	01100-16070	168	01183-06010	108	01184-12025	180
01030-04014	40	01100-16070	176	01183-06012	104	01184-12030	111
01030-04020	46	01100-16075	168	01183-06012	141	01184-12050	158
01030-05055	25	01103-08016	53	01183-06012	142	01185-04010	74
01030-05055	26	01103-08016	56	01183-06012	143	01185-04012	14
01030-06010	74	01103-08016	69	01183-06012	144	01185-06016	19
01031-06065	102	01103-08016	74	01183-06016	21	01185-06016	20
01033-05014	17	01103-08020	57	01183-06016	22	01185-08015	132
01033-05014	18	01103-08030	63	01183-06016	170	01185-08016	3
01033-06012	55	01103-08040	63	01183-06016	170	01185-08016	4
01043-03010	14	01103-10018	168	01183-06020	167	01185-08016	5
01044-04014	40	01103-10018	176	01183-06020	167	01185-08016	6
01066-08008	62	01103-10020	183	01183-06020	167	01185-08016	19
01066-10012	151	01103-10030	59	01183-06020	175	01185-08016	20
01066-10012	151	01103-10030	63	01183-06020	175	01185-08016	23
01100-04012	14	01103-10030	63	01183-06020	175	01185-08016	29
01100-06020	46	01103-10035	45	01183-08012	39	01185-08016	30
01100-08020	36	01103-10040	57	01183-08012	55	01185-08016	30
01100-08020	36	01103-10040	63	01183-08012	130	01185-08016	31
01100-08020	36	01103-10045	158	01183-08012	131	01185-08016	31
01100-08020	48	01103-10045	164	01183-08012	141	01185-08016	32
01100-08020	49	01103-10045	172	01183-08012	142	01185-08016	32
01100-08020	59	01103-10045	180	01183-08012	143	01185-08016	33
01100-08025	38	01103-10060	63	01183-08012	144	01185-08016	38
01100-08025	55	01103-10065	59	01183-08016	2	01185-08016	39
01100-08025	103	01103-12025	1	01183-08016	10	01185-08016	59
01100-08030	11	01103-12030	1	01183-08016	21	01185-08016	74
01100-10025	105	01103-14040	161	01183-08016	22	01185-08016	103
01100-10025	106	01103-14040	169	01183-08016	39	01185-08016	104
01100-10025	107	01103-14040	177	01183-08016	39	01185-08016	107
01100-10030	106	01103-16065	160	01183-08016	56	01185-08016	108
01100-10030	108	01103-16065	166	01183-08016	105	01185-08016	123
01100-10040	53	01103-16065	174	01183-08016	106	01185-08016	126
01100-10040	104	01103-16065	182	01183-08016	123	01185-08016	128
01100-10055	54	01106-10030	69	01183-08016	185	01185-08016	129
01100-12020	100	01106-10035	69	01183-08025	149	01185-08016	147
01100-12070	184	01106-10045	69	01184-10012	178	01185-08016	147
01100-12080	183	01106-10060	69	01184-10016	57	01185-08020	12
01100-14025	159	01106-12040	64	01184-10020	169	01185-08020	30
01100-14025	165	01109-12025	122	01184-10025	53	01185-08020	33
01100-14025	165	01110-10025	72	01184-10025	54	01185-08020	36
01100-14025	165	01110-30150	120	01184-10025	115	01185-08020	55
01100-14025	165	01110-30150	121	01184-10025	182	01185-08020	178
01100-14025	173	01113-10035	72	01184-10030	53	01185-08025	51
01100-14025	181	01113-30200	121	01184-10030	54	01185-08025	52
01100-14030	159	01113-30250	121	01184-10030	107	01185-08025	131
01100-14030	165	01120-10040	106	01184-10030	108	01185-08030	126
01100-14030	165	01120-12040	161	01184-10030	108	01185-10016	126
01100-14030	165	01120-12040	161	01184-10040	178	01186-08025	45
01100-14030	173	01120-12040	184	01184-10040	185	01186-10016	151
01100-14030	173	01123-10045	57	01184-10050	115	01186-10020	13
01100-14030	173	01141-06012	74	01184-12025	158	01186-10020	178
01100-14030	181	01170-05045	63	01184-12025	164	01186-10030	77
01100-14035	165	01171-06025	98	01184-12025	167	01186-10030	77
01100-14035	173	01181-08016	124	01184-12025	167	01186-10030	77

PARTS NUMBER INDEX

Part No.	Fig.No.	Part No.	Fig.No.	Part No.	Fig.No.	Part No.	Fig.No.
01186-12025	98	01402-00006	55	02000-00012	175	02010-20010	161
01186-12025	122	01402-00008	38	02000-00012	175	02010-20010	161
01186-12040	98	01402-00008	55	02000-00014	71	02010-20010	169
01213-10025	55	01402-00008	103	02000-00016	174	02010-20010	169
01217-10030	1	01402-00008	112	02000-00016	182	02010-20010	177
01400-00004	46	01402-00008	113	02000-00022	57	02010-20010	177
01400-00006	23	01402-00008	114	02000-00024	56	02010-20010	184
01400-00006	46	01402-00010	105	02000-00030	74	02011-00008	53
01400-00006	103	01402-00010	106	02000-20010	161	02011-00008	56
01400-00006	123	01402-00010	107	02000-20010	161	02011-00008	57
01400-00006	125	01402-00010	135	02000-20010	169	02011-00008	63
01400-00006	132	01402-00010	157	02000-20010	169	02011-00008	63
01400-00008	12	01402-00010	163	02000-20010	177	02011-00008	69
01400-00008	30	01402-00010	171	02000-20010	177	02011-00008	74
01400-00008	31	01402-00010	179	02000-20010	184	02011-00010	57
01400-00008	32	01402-00012	183	02001-00012	122	02011-00010	59
01400-00008	36	01402-00012	184	02010-00004	14	02011-00010	63
01400-00008	36	01402-00018	168	02010-00004	40	02011-00010	69
01400-00008	36	01402-10014	71	02010-00004	46	02011-00010	72
01400-00008	38	01412-00030	74	02010-00006	23	02011-00010	168
01400-00008	40	01420-00006	23	02010-00006	46	02011-00010	176
01400-00008	48	02000-00004	14	02010-00006	103	02011-00010	183
01400-00008	49	02000-00004	46	02010-00006	123	02011-00012	1
01400-00008	51	02000-00005	104	02010-00006	125	02011-00012	64
01400-00008	52	02000-00005	141	02010-00006	132	02011-00012	90
01400-00008	63	02000-00005	142	02010-00008	11	02011-00012	92
01400-00008	133	02000-00005	143	02010-00008	12	02011-00012	94
01400-00008	134	02000-00005	144	02010-00008	40	02011-00012	96
01400-00010	54	02000-00006	23	02010-00008	51	02011-00014	161
01400-00010	57	02000-00006	55	02010-00008	52	02011-00014	169
01400-00010	74	02000-00006	103	02010-00008	133	02011-00014	177
01400-00010	77	02000-00006	104	02010-00008	134	02011-00016	78
01400-00010	104	02000-00006	104	02010-00008	183	02011-00016	80
01400-00010	107	02000-00006	106	02010-00010	13	02011-00016	82
01400-00010	108	02000-00006	125	02010-00010	53	02011-00016	84
01400-00010	161	02000-00008	12	02010-00010	54	02011-00016	160
01400-00010	161	02000-00008	74	02010-00010	74	02011-00016	166
01400-00010	184	02000-00008	107	02010-00010	108	02011-00016	174
01400-00012	1	02000-00008	108	02010-00010	135	02011-00016	182
01400-00012	90	02000-00008	123	02010-00012	97	02013-00012	122
01400-00012	92	02000-00008	124	02010-00012	100	02100-00020	57
01400-00012	94	02000-00008	130	02010-00012	184	02100-00020	71
01400-00012	96	02000-00008	131	02010-00014	159	02100-00022	57
01400-00012	97	02000-00008	183	02010-00014	165	02100-00025	56
01400-00012	161	02000-00010	7	02010-00014	165	02100-00030	58
01400-00012	161	02000-00010	11	02010-00014	173	02100-00040	62
01400-00012	184	02000-00010	13	02010-00014	173	02100-00040	161
01400-00018	161	02000-00010	74	02010-00014	173	02100-00040	168
01400-00018	168	02000-00010	77	02010-00014	181	02100-00040	176
01400-00018	176	02000-00010	104	02010-00016	75	02100-00040	177
01400-00018	177	02000-00010	123	02010-00016	97	02100-00040	184
01400-00018	183	02000-00010	135	02010-00016	122	02100-00045	158
01400-00018	184	02000-00010	183	02010-00016	168	02100-00045	164
01400-10016	78	02000-00012	71	02010-00016	174	02110-00014	183
01400-10016	80	02000-00012	97	02010-00016	176	02110-00018	162
01400-10016	82	02000-00012	104	02010-00016	182	02110-00018	170
01400-10016	84	02000-00012	167	02010-00020	64	02110-00018	178
01400-10020	64	02000-00012	167	02010-00030	120	02110-00018	185
01400-10020	65	02000-00012	167	02010-00030	121	02110-00022	63
01400-20010	13	02000-00012	175	02010-10006	74	02110-00028	183

PARTS NUMBER INDEX

Part No.	Fig.No.	Part No.	Fig.No.	Part No.	Fig.No.	Part No.	Fig.No.
02110-00030	63	03071-30211	74	04150-20202	140	04710-04190	178
02110-00035	97	03071-30214	65	04150-20202	140	04710-04190	185
02110-00037	71	03126-83201	74	04150-20303	73	04710-04195	162
02120-00038	58	03146-13201	74	04150-20404	140	04710-04195	162
02120-00040	58	03190-00006	169	04150-20404	170	04710-04195	162
02120-00040	61	03190-00006	169	04150-20404	178	04710-04200	178
02121-00058	62	03190-00013	57	04601-44230	178	04710-04200	185
02200-02020	107	03192-00012	65	04601-44255	178	04710-04205	162
02200-02020	108	03192-10012	65	04601-44279	178	04710-04205	178
02200-02020	130	03192-30072	58	04601-44283	185	04710-04205	178
02200-02020	131	03211-09501	65	04601-44309	178	04710-04205	185
02200-03020	104	03217-08501	74	04601-44312	185	04710-04205	185
02200-03030	161	03300-00160	57	04601-44328	178	04710-04210	162
02200-03030	168	03300-00180	57	04601-44332	185	04710-04210	178
02200-03030	176	03300-00280	170	04601-44353	178	04710-04210	185
02200-03030	177	03300-00280	178	04601-44356	185	04710-04215	162
02200-03030	183	03300-00280	185	04601-44361	178	04710-04220	162
02200-03030	184	03310-00300	57	04601-44364	185	04710-04220	178
02200-06055	74	03320-00110	73	04601-44397	178	04710-04225	162
02200-16010	55	03320-00110	140	04601-44439	178	04710-04225	178
02200-16010	104	03320-00110	140	04601-44482	178	04710-04230	162
02200-16010	141	03320-00140	73	04601-44515	178	04710-04230	162
02200-16010	142	03320-00140	73	04691-02035	147	04710-04230	162
02200-16010	143	03320-00140	73	04691-02035	147	04710-04240	162
02200-16010	144	03320-00140	140	04691-02038	147	04710-04245	178
02200-16015	104	03320-00140	147	04691-04123	146	04710-04250	162
02200-16015	106	03320-00140	150	04710-04005	118	04710-04250	162
02212-06016	63	03320-00140	162	04710-04110	162	04710-04250	178
02212-10020	64	03320-00140	162	04710-04120	162	04710-04260	162
02212-10020	69	03320-00140	170	04710-04130	162	04710-04265	162
02212-12020	57	03320-00140	170	04710-04135	162	04710-04265	178
02212-12020	59	03320-00140	170	04710-04135	178	04710-04270	178
02262-06015	55	03320-00140	178	04710-04140	178	04710-04275	162
02262-06015	104	03320-00140	178	04710-04145	162	04710-04280	178
02262-06020	55	03320-00140	185	04710-04145	162	04710-04285	162
02262-06020	106	03320-00140	185	04710-04145	162	04710-04285	178
02262-08025	107	03320-00180	135	04710-04150	178	04710-04295	162
02262-08025	108	03320-00180	140	04710-04150	178	04710-04300	162
02262-08045	130	03320-00180	162	04710-04150	185	04710-04320	162
02262-08045	131	03320-00180	169	04710-04155	178	04710-04330	162
02270-01014	162	03320-00180	170	04710-04160	162	04710-04355	162
02270-01014	170	03320-00180	170	04710-04160	178	04901-00100	56
02270-01014	178	03320-00180	178	04710-04160	185	04901-00100	151
02270-01014	185	03320-00180	178	04710-04165	162	04901-00100	160
02270-04020	63	03320-00180	178	04710-04165	178	04901-00100	166
02270-04035	63	03320-00180	185	04710-04165	185	04901-00100	174
02432-01008	153	03320-00180	185	04710-04170	162	04901-00100	182
02432-01008	172	03320-00180	185	04710-04170	162	04901-00190	56
03000-06207	58	03320-00210	183	04710-04175	162	04901-00190	74
03000-06208	58	03320-00240	140	04710-04175	178	04901-00190	74
03000-06208	58	03320-00280	162	04710-04175	185	04901-00190	75
03000-06208	61	03320-00290	135	04710-04180	162	04901-00190	105
03000-06210	68	03320-00340	169	04710-04180	162	04901-00190	106
03000-06306	58	03320-00340	184	04710-04180	178	04901-00191	74
03000-06306	58	03350-00750	97	04710-04180	185	04911-00020	148
03000-06306	61	03360-00210	183	04710-04185	162	04911-00021	162
03000-06306	62	04134-20303	147	04710-04185	178	04911-00021	162
03003-06306	58	04134-20404	178	04710-04185	185	04911-00021	178
03020-06904	71	04134-20404	185	04710-04190	148	04911-00021	178
03071-30207	74	04150-20202	73	04710-04190	162	04911-00023	150

PARTS NUMBER INDEX

Part No.	Fig.No.	Part No.	Fig.No.	Part No.	Fig.No.	Part No.	Fig.No.
04911-00040	8	06711-70012	79	09001-10057	177	12N43-42111	58
04911-00040	146	06711-70012	80	09001-10059	168	12N43-42121	58
04911-00042	146	06711-70012	81	09001-10059	168	12N43-42131	58
04911-00044	8	06711-70012	88	09001-10059	176	12N43-42141	58
04911-00044	146	06711-70012	88	09001-10061	177	12N43-42151	58
04911-00046	146	06712-60009	90	09001-10065	168	12N43-42161	58
04911-00060	3	06712-60009	91	09001-10065	176	12N43-42171	58
04911-00065	3	06712-60009	92	09001-10065	177	12N43-42191	58
04913-10200	19	06712-60009	93	09001-10069	168	12N43-42201	58
04913-10200	20	06731-00120	86	09001-10069	177	12N43-42211	58
04913-11100	107	06731-00120	88	09001-10071	176	12N43-42221	58
04913-11100	108	06804-70012	85	09001-10071	177	12N43-42251	58
04913-11380	100	06806-55015	87	09001-10073	168	12N43-42261	58
04914-00019	118	06806-60009	94	09001-10077	168	12N43-42271	58
04914-00019	170	06806-60009	94	09001-10077	176	12N43-42281	58
06001-55015	86	06806-60009	95	09001-10077	177	12N43-42291	58
06001-60009	92	06806-70012	82	09001-10081	168	12N43-42301	58
06001-60009	93	06806-70012	82	09001-10083	176	12N43-42321	58
06001-70012	80	06806-70012	83	09001-10083	177	12N43-42351	58
06001-70012	81	06806-70012	89	09001-10089	168	12N43-42401	57
06001-70012	88	06806-70012	89	09001-10089	177	12N43-42411	57
06001-70012	88	06807-60009	94	09001-10095	177	12N43-42421	57
06005-55015	86	06807-60009	94	09001-10097	168	12N43-42431	57
06005-60009	92	06807-60009	94	10A63-10201	56	12N43-42441	57
06005-60009	93	06807-70012	82	11243-82081	62	12N43-42471	57
06005-70012	80	06807-70012	82	11243-82091	62	12N43-42481	57
06005-70012	81	06807-70012	82	11243-82161	62	12N43-42501	57
06005-70012	88	06841-55015	87	11243-82181	62	12N43-42511	57
06005-70012	88	06841-60009	94	11243-82211	62	12N43-42521	57
06006-55015	86	06841-70012	82	115G3-82111	59	12N43-42551	58
06006-60009	90	06841-70012	89	115G3-82241	59	12N43-42561	58
06006-60009	91	06841-70012	89	115G3-82251	59	12N43-42571	58
06006-60009	92	06843-55015	87	115G3-82351	62	12N43-42581	58
06006-60009	93	06843-60009	94	115G3-82361	62	12N52-50201	54
06006-70012	78	06843-70012	82	115G3-82671	63	12N53-22001	68
06006-70012	79	06843-70012	89	116H3-82101	59	12N53-22011	68
06006-70012	80	06843-70012	89	116H3-82101	61	12N53-32001	66
06006-70012	81	06851-55015	87	116H3-82101	63	12N53-32011	66
06006-70012	88	06851-60009	94	116H3-82201	63	12N53-50201	67
06006-70012	88	06851-70012	82	117M7-10401	135	12N53-50231	67
06007-55015	86	06851-70012	89	118H3-82231	63	12N53-50301	69
06007-60009	92	06851-70012	89	12N42-50201	53	12N53-52031	69
06007-60009	93	09001-10035	168	12N43-10211	56	12N53-52061	69
06007-70012	80	09001-10037	176	12N43-12001	56	12N53-52081	69
06007-70012	81	09001-10039	168	12N43-12011	56	12N53-52091	69
06007-70012	88	09001-10041	168	12N43-12021	56	12N53-52101	69
06007-70012	88	09001-10041	176	12N43-12101	56	12N53-52111	69
06701-55015	86	09001-10045	168	12N43-12111	56	12N53-52121	69
06701-70012	78	09001-10045	168	12N43-12151	56	12N53-52131	69
06701-70012	79	09001-10045	176	12N43-12201	56	12N53-52141	69
06701-70012	80	09001-10047	168	12N43-19801	56	12N53-52151	69
06701-70012	81	09001-10049	177	12N43-19801	58	12N53-52161	69
06701-70012	88	09001-10051	168	12N43-19811	57	12N53-52171	69
06701-70012	88	09001-10051	168	12N43-40251	58	12N53-52181	69
06702-60009	90	09001-10051	176	12N43-42001	57	12N53-52191	69
06702-60009	91	09001-10053	176	12N43-42031	57	12N53-52201	69
06702-60009	92	09001-10053	177	12N43-42051	58	12N53-52211	69
06702-60009	93	09001-10055	168	12N43-42061	58	12N53-52221	69
06711-55015	86	09001-10057	168	12N43-42071	58	12N53-52231	69
06711-70012	78	09001-10057	176	12N43-42101	58	12N53-52241	69

PARTS NUMBER INDEX

Part No.	Fig.No.	Part No.	Fig.No.	Part No.	Fig.No.	Part No.	Fig.No.
12N53-52251	69	12N53-82621	59	15583-82521	61	212T0-80551	176
12N53-52271	69	12N53-82621	66	15583-82571	61	212T0-80561	168
12N53-52291	69	12N53-82621	69	15943-83261	59	212T0-80561	176
12N53-52341	69	12N53-82641	60	16113-52121	69	212T0-80571	176
12N53-52351	69	12N53-82641	66	16113-52141	69	212T0-80581	176
12N53-52381	69	12N53-82701	63	16402-54331	43	212T0-80591	176
12N53-52431	69	12N53-82711	59	16402-54331	47	212T0-80601	176
12N53-52441	69	12N53-82721	63	16402-54331	48	212T0-82001	168
12N53-52451	69	12N53-82731	63	16402-54331	49	212T0-82001	176
12N53-52461	69	12N53-82741	63	20A75-20201	104	212T0-82101	168
12N53-52471	69	12N53-82751	63	20A75-22001	104	212T0-82101	176
12N53-52481	69	12N53-82761	59	205A2-63311	46	21232-32551	11
12N53-52491	69	12N53-82771	63	20801-02141	10	21232-32551	13
12N53-52501	69	12N53-82781	63	209K2-40501	18	21237-52051	116
12N53-52511	69	12N53-82791	63	209K2-42002	25	21237-52051	116
12N53-59801	69	12N53-89801	59	209K2-42002	26	21237-52062	116
12N53-59811	69	12N53-89801	61	209K2-42021	25	21237-52062	116
12N53-59821	69	12N53-89811	59	209K2-42021	26	213T1-02011	2
12N53-80201	62	12N53-89831	63	209K2-42041	25	213T1-02021	2
12N53-80301	59	12003-12021	56	209K2-42041	26	214A0-51701	169
12N53-80311	59	12003-42052	57	209K2-42351	19	214A0-51711	169
12N53-80321	60	12003-42061	57	209K2-42351	20	214A0-51721	169
12N53-80341	63	12003-42251	58	209K2-42351	40	214A0-51731	169
12N53-82001	59	12003-42451	57	209K2-42351	51	214A0-51741	169
12N53-82011	59	12003-42461	57	209K2-42351	52	214A0-51751	169
12N53-82021	59	12163-82331	59	209K2-43001	128	214A0-51761	169
12N53-82041	59	12163-82421	59	209K2-43001	129	214A0-51771	169
12N53-82061	56	12163-82541	57	209P6-42831	9	214A0-51781	169
12N53-82061	59	12163-82541	59	209P6-42831	127	214A0-51791	169
12N53-82081	59	12163-82541	61	209P6-42831	130	214A0-51801	169
12N53-82091	61	12163-82561	60	209P6-42831	131	214A0-51811	169
12N53-82101	62	124G3-52011	69	210F2-42021	25	214A0-51821	169
12N53-82111	62	124T3-42651	67	210F2-42021	26	214A0-51831	169
12N53-82131	62	124T3-42661	67	210F2-42031	25	214A0-51841	169
12N53-82151	61	124T3-43041	12	210F2-42031	26	214A0-51851	169
12N53-82161	61	130C2-60302	46	210F8-42631	169	214A0-51861	169
12N53-82171	61	134A3-42071	58	210F8-42631	169	214A0-51871	169
12N53-82201	58	134A3-52041	69	21152-42091	19	214A0-51881	169
12N53-82201	61	134A3-52051	69	21152-42091	20	214A0-53681	169
12N53-82211	58	134B3-82401	62	21152-42091	52	214A0-53681	169
12N53-82211	61	134G3-82111	62	212T0-50501	168	214A0-53721	169
12N53-82221	63	134G3-82121	62	212T0-50511	168	214A0-53901	169
12N53-82231	63	134G3-82131	62	212T0-50521	168	214A0-53901	169
12N53-82251	63	134G3-82141	62	212T0-50531	168	214A0-53901	169
12N53-82291	63	134G3-89811	62	212T0-50541	168	214A0-53901	169
12N53-82321	63	134G3-89831	62	212T0-50551	168	214A0-59821	169
12N53-82331	63	135C3-12081	56	212T0-50561	168	214A0-59821	169
12N53-82351	63	139B3-82121	63	212T0-50571	168	214A0-62151	170
12N53-82361	63	14603-52131	69	212T0-50581	168	214A0-72701	174
12N53-82371	63	15573-42021	58	212T0-50591	168	214A0-72701	182
12N53-82401	63	15573-42151	57	212T0-50601	168	214A0-82681	168
12N53-82421	63	15573-42151	63	212T0-50611	168	214A0-82681	176
12N53-82451	63	15573-42151	64	212T0-50621	168	214A0-82831	160
12N53-82481	63	15583-82101	61	212T0-50631	168	214A0-82831	168
12N53-82501	63	15583-82411	63	212T0-50641	168	214A0-82831	176
12N53-82531	63	15583-82421	63	212T0-80501	176	214A0-93001	172
12N53-82551	63	15583-82441	63	212T0-80511	176	214A0-93011	172
12N53-82571	63	15583-82451	63	212T0-80521	176	214A0-93031	172
12N53-82581	63	15583-82461	63	212T0-80531	176	214A0-93041	172
12N53-82621	54	15583-82521	59	212T0-80541	176	214A0-93201	172

PARTS NUMBER INDEX

Part No.	Fig.No.	Part No.	Fig.No.	Part No.	Fig.No.	Part No.	Fig.No.
214A0-93211	172	214A7-42071	142	214A8-10602	171	214A8-44151	162
214A0-93231	172	214A7-42071	143	214A8-10602	179	214A8-44151	170
214A0-93241	172	214A7-42071	143	214A8-10612	157	214A8-44151	178
214A2-12001	7	214A7-42071	143	214A8-10612	163	214A8-44151	185
214A2-12001	11	214A7-42071	143	214A8-10612	171	214A8-46001	184
214A2-12021	7	214A7-42071	144	214A8-10612	179	214A8-52051	74
214A2-12111	7	214A7-42071	144	214A8-10622	157	214A8-52051	97
214A2-12121	7	214A7-42071	144	214A8-10622	163	214A9-20101	156
214A2-12141	7	214A7-42071	144	214A8-10622	171	214J8-42721	183
214A2-12201	7	214A7-42071	144	214A8-10622	179	214J8-46001	183
214A2-13001	7	214A7-42181	145	214A8-10632	157	214T0-83501	183
214A2-13011	7	214A7-42181	145	214A8-10632	163	214T0-83511	183
214A2-22071	10	214A7-42181	145	214A8-10632	171	214T0-83521	183
214A2-42331	21	214A7-42181	145	214A8-10632	179	214T0-83531	183
214A2-42331	22	214A7-42191	145	214A8-10642	157	214T0-83541	183
214A2-42331	106	214A7-42201	145	214A8-10642	163	215E4-32341	74
214A2-42611	7	214A8-02201	160	214A8-10642	171	215E4-39801	74
214A2-42611	19	214A8-02201	166	214A8-10642	179	215E4-52231	97
214A2-42611	20	214A8-02201	174	214A8-10653	157	215E8-42171	177
214A2-42611	35	214A8-02201	182	214A8-10653	163	215E8-42171	177
214A2-42611	35	214A8-10512	157	214A8-10653	171	215E8-42181	177
214A2-42611	37	214A8-10512	157	214A8-10653	179	215E8-42181	177
214A2-42611	50	214A8-10512	163	214A8-10663	157	216G0-93101	178
214A2-42611	51	214A8-10512	163	214A8-10663	163	216G0-93101	185
214A2-42611	52	214A8-10512	163	214A8-10663	171	216G0-93151	178
214A2-42621	19	214A8-10512	171	214A8-10663	179	216G1-02451	2
214A2-42621	20	214A8-10512	171	214A8-10673	157	216G1-02461	2
214A2-42621	47	214A8-10512	179	214A8-10673	163	216G1-02471	2
214A2-42621	48	214A8-10512	179	214A8-10673	171	216G1-02481	2
214A2-42621	49	214A8-10512	179	214A8-10673	179	216G1-02491	2
214A2-44001	39	214A8-10522	157	214A8-10683	157	216G1-02501	2
214A2-52002	55	214A8-10522	163	214A8-10683	163	216G2-22051	10
214A2-52012	55	214A8-10522	171	214A8-10683	171	216G2-40602	24
214A3-02011	65	214A8-10522	179	214A8-10683	179	216G2-40602	30
214A4-12161	71	214A8-10532	157	214A8-11001	157	216G2-40602	31
214A4-32041	74	214A8-10532	163	214A8-11001	163	216G2-40602	32
214A4-32051	74	214A8-10532	171	214A8-11001	171	216G2-40602	33
214A4-32161	74	214A8-10532	179	214A8-11001	179	216G2-40701	24
214A4-32201	75	214A8-10542	157	214A8-12001	157	216G2-40711	24
214A4-32211	75	214A8-10542	163	214A8-12001	163	216G2-40721	24
214A5-22001	104	214A8-10542	171	214A8-12001	171	216G2-40731	24
214A5-32312	107	214A8-10542	179	214A8-12001	179	216G2-42311	19
214A5-32312	114	214A8-10552	157	214A8-12011	157	216G2-42311	20
214A5-33012	114	214A8-10552	163	214A8-12011	163	216G2-43111	23
214A5-33031	114	214A8-10552	171	214A8-12011	171	216G2-43401	19
214A5-33041	114	214A8-10552	179	214A8-12011	179	216G2-43401	20
214A5-33052	114	214A8-10563	157	214A8-12021	157	216G2-43411	19
214A5-33062	114	214A8-10563	163	214A8-12021	163	216G2-43411	20
214A5-53012	154	214A8-10563	171	214A8-12021	171	216G2-43421	19
214A6-42252	101	214A8-10563	179	214A8-12021	179	216G2-43421	20
214A6-42771	127	214A8-10582	157	214A8-12031	157	216G2-43502	24
214A6-42771	127	214A8-10582	163	214A8-12031	163	216G2-43502	30
214A6-42781	132	214A8-10582	171	214A8-12031	171	216G2-43502	31
214A6-42781	132	214A8-10582	179	214A8-12031	179	216G2-43502	32
214A7-42071	55	214A8-10592	157	214A8-42661	161	216G2-43502	33
214A7-42071	55	214A8-10592	163	214A8-42661	169	216G2-43531	24
214A7-42071	141	214A8-10592	171	214A8-42661	177	216G2-43531	30
214A7-42071	141	214A8-10592	179	214A8-42661	183	216G2-43531	31
214A7-42071	142	214A8-10602	157	214A8-42661	184	216G2-43531	32
214A7-42071	142	214A8-10602	163	214A8-42721	184	216G2-43531	33

PARTS NUMBER INDEX

Part No.	Fig.No.	Part No.	Fig.No.	Part No.	Fig.No.	Part No.	Fig.No.
216G2-43542	24	216G6-42451	123	216H3-92281	127	22N42-42201	15
216G2-43542	30	216G6-42481	123	216H5-42141	123	22N43-90201	55
216G2-43542	31	216G6-42541	123	216H7-82111	150	22N43-90211	55
216G2-43542	32	216G6-42541	123	217G2-32001	11	22N43-90301	55
216G2-43542	33	216G6-42921	125	217G2-32001	12	22N43-90511	55
216G2-43551	24	216G6-42931	125	217G2-42021	23	22N43-92201	55
216G2-43551	30	216G6-43561	122	217G2-42301	19	22N43-92301	55
216G2-43551	31	216G6-52161	126	217G2-42301	20	22N43-92701	55
216G2-43551	32	216G6-52291	123	217M1-02001	3	22N43-92711	55
216G2-43551	33	216G6-52291	126	217M2-12221	8	22N43-92731	55
216G2-43562	24	216G6-52291	130	22B51-02201	3	22N43-92901	55
216G2-43562	30	216G6-52291	131	22N19-12151	153	22N43-92911	55
216G2-43562	31	216G7-32021	136	22N19-12161	153	22N43-93001	55
216G2-43562	32	216G7-32021	137	22N19-12171	153	22N43-93011	55
216G2-43562	33	216G7-32021	138	22N19-12181	153	22N43-93021	55
216G2-43571	24	216G7-32021	139	22N19-12281	153	22N43-93031	55
216G2-43571	30	216G7-52051	117	22N19-12601	153	22N45-30303	105
216G2-43571	31	216G7-52201	118	22N40-50201	183	22N45-32101	109
216G2-43571	32	216G8-12101	157	22N40-50221	183	22N45-32131	109
216G2-43571	33	216G8-12101	163	22N40-50231	183	22N45-32151	107
216G2-43582	24	216G8-12101	171	22N40-50261	183	22N45-32161	107
216G2-43582	30	216G8-12101	179	22N40-50401	183	22N45-32201	107
216G2-43582	31	216G8-12921	157	22N40-50421	183	22N45-40202	105
216G2-43582	32	216G8-12921	163	22N40-50431	183	22N45-40302	105
216G2-43582	33	216G8-12921	171	22N40-50461	183	22N45-42101	105
216G2-43592	24	216G8-12921	179	22N40-50601	183	22N45-42701	109
216G2-43592	30	216G8-33351	174	22N40-50621	183	22N45-42801	109
216G2-43592	31	216G8-33351	182	22N40-50631	183	22N50-40201	166
216G2-43592	32	216G8-33361	160	22N40-50661	183	22N50-40211	166
216G2-43592	33	216G8-33361	166	22N40-70201	182	22N50-40221	166
216G2-43602	24	216G8-33361	174	22N40-70231	182	22N50-40231	166
216G2-43602	30	216G8-33361	174	22N40-70241	182	22N50-40241	166
216G2-43602	31	216G8-33361	182	22N40-70251	182	22N50-40251	166
216G2-43602	32	216G8-33361	182	22N40-70261	182	22N50-40261	166
216G2-43602	33	216G8-33371	160	22N40-70401	182	22N50-40271	166
216G2-43611	24	216G8-33371	166	22N40-70431	182	22N50-40281	166
216G2-43611	30	216G8-33371	174	22N40-70441	182	22N50-40291	166
216G2-43611	31	216G8-33371	174	22N40-70451	182	22N50-40301	166
216G2-43611	32	216G8-33371	182	22N40-70461	182	22N50-40311	166
216G2-43611	33	216G8-33371	182	22N40-70601	182	22N50-40321	166
216G2-43622	24	216G8-33401	160	22N40-70631	182	22N50-40331	166
216G2-43622	30	216G8-33401	166	22N40-70641	182	22N50-40341	166
216G2-43622	31	216G8-33401	174	22N40-70651	182	22N50-40351	166
216G2-43622	32	216G8-33401	182	22N40-70661	182	22N50-40361	166
216G2-43622	33	216G8-52301	160	22N40-72191	182	22N50-40371	166
216G2-43631	24	216G8-52301	166	22N40-72311	183	22N50-40381	166
216G2-43631	30	216G8-52301	174	22N40-74301	183	22N50-40401	166
216G2-43631	31	216G8-52301	182	22N40-74311	183	22N50-40411	166
216G2-43631	32	216G8-53001	152	22N40-74501	183	22N50-40421	166
216G2-43631	33	216G8-53011	152	22N40-80261	183	22N50-40431	166
216G2-43651	19	216G9-12052	154	22N40-80461	183	22N50-40441	166
216G2-43651	20	216G9-12062	154	22N40-80661	183	22N50-40451	166
216G2-43711	19	216G9-12071	154	22N40-81001	185	22N50-40461	166
216G2-43711	20	216G9-12071	155	22N40-81091	185	22N50-40471	166
216G4-12101	71	216G9-12131	154	22N40-82201	185	22N50-40481	166
216G4-12111	71	216G9-12131	155	22N40-82221	185	22N50-40491	166
216G5-32201	112	216H3-92171	123	22N40-82251	185	22N50-40501	166
216G5-32331	112	216H3-92171	130	22N40-82801	185	22N50-40511	166
216G5-32341	112	216H3-92171	131	22N40-90201	180	22N50-40521	166
216G5-42011	107	216H3-92281	127	22N41-00201	1	22N50-40531	166

PARTS NUMBER INDEX

Part No.	Fig.No.	Part No.	Fig.No.	Part No.	Fig.No.	Part No.	Fig.No.
22N50-40541	166	22N52-22101	119	22N54-32231	74	22N56-40272	131
22N50-40551	166	22N52-22201	117	22N54-32241	74	22N56-40302	124
22N50-40561	166	22N52-22201	119	22N54-32311	75	22N56-40361	123
22N50-40571	166	22N52-30101	11	22N54-32321	75	22N56-40371	124
22N50-40581	166	22N52-32021	13	22N54-32351	74	22N56-40401	124
22N50-50511	168	22N52-40301	14	22N54-32361	74	22N56-40411	130
22N50-50521	168	22N52-42021	19	22N54-32401	74	22N56-40421	130
22N50-50531	168	22N52-42021	20	22N54-32402	74	22N56-40451	123
22N50-60201	164	22N52-42031	19	22N54-32481	74	22N56-40461	123
22N50-70201	174	22N52-42031	20	22N54-32501	74	22N56-40471	123
22N50-70211	174	22N52-42101	19	22N54-32511	74	22N56-42041	122
22N50-70221	174	22N52-42101	20	22N54-32801	74	22N56-42602	125
22N50-70231	174	22N52-42111	23	22N54-32941	74	22N56-42612	125
22N50-70241	174	22N52-42201	16	22N54-32971	74	22N56-42701	128
22N50-70251	174	22N52-42251	25	22N54-50201	97	22N56-42701	129
22N50-70261	174	22N52-42301	23	22N54-50221	97	22N56-42711	132
22N50-70271	174	22N52-42311	19	22N54-52001	97	22N56-42721	132
22N50-70281	174	22N52-42311	20	22N54-52101	97	22N56-42731	128
22N50-70291	174	22N52-42321	19	22N54-52121	97	22N56-42731	129
22N50-70301	174	22N52-42321	20	22N54-52141	97	22N56-42741	128
22N50-70401	174	22N52-42331	19	22N54-52151	97	22N56-42741	129
22N50-70411	174	22N52-42331	20	22N54-52201	97	22N56-42751	128
22N50-70421	174	22N52-42501	14	22N54-52251	97	22N56-42751	129
22N50-70431	174	22N52-42511	14	22N54-59801	97	22N56-42761	132
22N50-70441	174	22N52-43001	19	22N55-10161	98	22N56-42771	129
22N50-70451	174	22N52-43001	20	22N55-12271	99	22N56-42791	128
22N50-70461	174	22N53-00302	64	22N55-12281	99	22N56-42791	129
22N50-70471	174	22N53-00602	64	22N55-12571	100	22N56-42811	132
22N50-70481	174	22N53-00612	64	22N55-12701	101	22N56-42811	132
22N50-70491	174	22N53-02001	65	22N55-12711	101	22N56-42851	132
22N50-70501	174	22N53-02071	65	22N55-12721	101	22N56-42861	128
22N50-70601	174	22N53-02151	64	22N55-12901	103	22N56-42861	129
22N50-70611	174	22N53-02201	70	22N55-13181	98	22N56-42901	127
22N50-70621	174	22N53-02212	70	22N55-13181	122	22N56-42911	127
22N50-70631	174	22N53-02601	64	22N55-13191	98	22N56-43021	132
22N50-70641	174	22N53-02611	64	22N55-20201	104	22N56-43021	132
22N50-70651	174	22N53-70101	70	22N55-20211	104	22N56-43021	132
22N50-70661	174	22N53-70201	70	22N55-22011	104	22N56-43021	132
22N50-70671	174	22N54-10201	71	22N55-22031	104	22N56-43031	132
22N50-70681	174	22N54-10301	72	22N55-22121	104	22N56-43041	123
22N50-70691	174	22N54-10311	72	22N55-22131	104	22N56-43051	123
22N50-70701	174	22N54-12011	71	22N55-40202	106	22N56-43221	123
22N50-73191	178	22N54-12021	71	22N55-40302	106	22N56-43251	130
22N50-81601	177	22N54-12022	71	22N55-40402	106	22N56-43251	131
22N50-81611	177	22N54-12201	128	22N55-42101	106	22N56-43271	123
22N50-81621	177	22N54-12201	129	22N55-42141	107	22N56-43281	123
22N50-81631	177	22N54-12311	128	22N55-42141	108	22N56-43411	132
22N50-81641	177	22N54-12311	129	22N55-42171	109	22N56-43421	132
22N50-81651	177	22N54-12321	128	22N55-42171	110	22N56-43421	132
22N50-81661	177	22N54-12321	129	22N55-42601	106	22N56-43421	132
22N50-81671	177	22N54-30101	74	22N55-42702	110	22N56-43421	132
22N50-81681	177	22N54-30102	74	22N55-42802	110	22N56-43431	132
22N50-81691	177	22N54-30121	74	22N55-50101	115	22N56-43531	123
22N50-81701	177	22N54-30122	74	22N56-32041	120	22N56-43531	124
22N50-90101	172	22N54-32131	74	22N56-40101	122	22N56-43541	123
22N50-92101	178	22N54-32151	74	22N56-40202	123	22N56-43771	132
22N50-92101	185	22N54-32181	74	22N56-40203	123	22N56-43801	132
22N51-00161	1	22N54-32201	74	22N56-40252	130	22N56-43831	132
22N51-00201	1	22N54-32211	74	22N56-40262	130	22N56-43871	132
22N51-00211	1	22N54-32221	74	22N56-40272	130	22N56-43881	132

Part No.	Fig.No.	Part No.	Fig.No.	Part No.	Fig.No.	Part No.	Fig.No.
22N56-43911	132	22N57-42161	141	22N58-30311	160	22N58-40361	161
22N56-43921	132	22N57-42161	142	22N58-30321	160	22N58-40371	161
22N56-43931	132	22N57-42161	143	22N58-30331	160	22N58-40381	161
22N56-50201	126	22N57-42201	136	22N58-30341	160	22N58-43011	161
22N56-50211	126	22N57-42201	137	22N58-30351	160	22N58-43011	161
22N56-50212	126	22N57-42201	138	22N58-30361	160	22N58-43011	169
22N56-52201	126	22N57-42201	139	22N58-30371	160	22N58-43011	169
22N56-52222	126	22N57-42211	136	22N58-30381	160	22N58-43011	183
22N56-52231	126	22N57-42211	137	22N58-30391	160	22N58-43011	184
22N56-52241	126	22N57-42211	138	22N58-30401	160	22N58-45001	162
22N56-52251	126	22N57-42211	139	22N58-30411	160	22N58-45001	178
22N56-52302	127	22N57-52101	118	22N58-30411	160	22N58-45001	185
22N56-52311	127	22N57-52102	118	22N58-30421	160	22N58-50101	151
22N56-52321	127	22N57-52302	117	22N58-30421	160	22N58-50111	151
22N56-52351	126	22N57-62101	146	22N58-30431	160	22N58-50121	151
22N56-52351	126	22N57-62201	146	22N58-30431	160	22N58-50131	151
22N56-52361	126	22N57-62221	149	22N58-30441	160	22N58-50141	151
22N56-52402	126	22N57-62381	147	22N58-30441	160	22N58-50201	151
22N57-30221	136	22N57-62391	147	22N58-30451	160	22N58-50211	151
22N57-30231	137	22N57-62401	149	22N58-30451	160	22N58-50221	151
22N57-30241	138	22N57-62451	149	22N58-30461	160	22N58-50231	151
22N57-30251	139	22N57-62531	149	22N58-30471	160	22N58-50241	151
22N57-30321	136	22N57-62801	147	22N58-30481	160	22N58-50301	152
22N57-30331	137	22N57-63001	146	22N58-30491	160	22N58-50311	152
22N57-30341	138	22N57-63011	140	22N58-30501	160	22N58-50311	152
22N57-30351	139	22N57-80201	150	22N58-30511	160	22N58-50311	152
22N57-32041	136	22N58-10501	157	22N58-30521	160	22N58-50311	152
22N57-32041	137	22N58-10501	163	22N58-30531	160	22N58-52101	151
22N57-32041	138	22N58-10501	171	22N58-30541	160	22N58-52111	151
22N57-32041	139	22N58-10501	179	22N58-30551	160	22N58-52121	151
22N57-40011	141	22N58-10511	157	22N58-30561	160	22N58-52301	151
22N57-40011	142	22N58-10511	163	22N58-30571	160	22N58-52801	151
22N57-40011	143	22N58-10511	171	22N58-30581	160	22N58-52811	151
22N57-40011	144	22N58-10511	179	22N58-30591	160	22N58-52821	151
22N57-40021	141	22N58-10521	157	22N58-32701	158	22N58-52831	151
22N57-40021	142	22N58-10521	163	22N58-32701	164	22N58-52841	151
22N57-40021	143	22N58-10521	171	22N58-32701	172	22N58-52851	151
22N57-40021	144	22N58-10521	179	22N58-32701	180	22N58-52861	151
22N57-40031	142	22N58-20201	158	22N58-32711	158	22N58-52871	151
22N57-40031	143	22N58-20201	158	22N58-32711	164	22N58-52901	151
22N57-40031	144	22N58-20701	158	22N58-32711	172	22N58-52911	151
22N57-40041	143	22N58-22001	173	22N58-32711	180	22N58-52921	151
22N57-40041	144	22N58-22111	173	22N58-34501	160	22N58-52931	151
22N57-40051	144	22N58-22121	173	22N58-34601	160	22N58-52941	151
22N57-42001	141	22N58-30201	160	22N58-40201	161	22N58-53001	152
22N57-42001	142	22N58-30211	160	22N58-40211	161	22N58-53101	152
22N57-42001	143	22N58-30211	160	22N58-40221	161	22N58-53101	152
22N57-42001	144	22N58-30221	160	22N58-40231	161	22N59-12041	153
22N57-42101	141	22N58-30221	160	22N58-40241	161	22N59-12051	153
22N57-42101	142	22N58-30231	160	22N58-40251	161	22N59-12061	153
22N57-42101	143	22N58-30231	160	22N58-40261	161	22N59-12101	153
22N57-42101	144	22N58-30241	160	22N58-40271	161	22N59-12111	153
22N57-42121	141	22N58-30241	160	22N58-40281	161	22N59-12151	153
22N57-42121	142	22N58-30251	160	22N58-40291	161	22N59-12161	153
22N57-42121	143	22N58-30251	160	22N58-40301	161	22N59-12171	153
22N57-42121	144	22N58-30261	160	22N58-40311	161	22N59-12181	153
22N57-42151	141	22N58-30271	160	22N58-40321	161	22N59-12261	154
22N57-42151	142	22N58-30281	160	22N58-40331	161	22N59-12281	153
22N57-42151	143	22N58-30291	160	22N58-40341	161	22N59-12351	154
22N57-42151	144	22N58-30301	160	22N58-40351	161	22N59-12601	153

Part No.	Fig.No.	Part No.	Fig.No.	Part No.	Fig.No.	Part No.	Fig.No.
22N90-90152	178	22218-40191	168	22679-45771	168	22679-46691	161
22N90-90161	178	22218-40191	176	22679-45791	168	22679-46811	161
22S57-82001	150	22218-40191	177	22679-45791	176	22717-40061	104
22U42-42211	21	22218-40191	183	22679-45811	168	22717-40081	161
22U51-00101	1	22218-40191	184	22679-45811	183	22717-40081	177
22U51-00201	1	22218-42111	168	22679-45831	177	22854-40201	85
22U51-00211	1	22218-42111	176	22679-45851	161	229F0-51201	169
22U51-00301	2	22218-42111	177	22679-45851	183	229F0-51211	169
22U51-02601	3	22252-32241	11	22679-45871	176	229F0-51221	169
22U52-12001	8	22252-32241	13	22679-45891	161	229F0-51231	169
22U52-12011	8	22252-32251	7	22679-45891	168	229F0-51241	169
22U52-12201	6	22252-32251	11	22679-45891	168	229F0-51251	169
22U52-30111	13	22256-42001	27	22679-45891	177	229F0-51261	169
22U52-42151	23	22256-42001	28	22679-45911	161	229F0-51271	169
22U52-42211	22	22256-42001	29	22679-45911	176	229F0-51281	169
22U55-22102	104	22256-42001	123	22679-45931	183	229F0-51291	169
22U57-62001	146	224G2-32011	13	22679-45951	168	229F0-51301	169
22018-30121	158	224G5-42061	107	22679-45951	177	229F0-51311	169
22018-30121	164	224G5-42061	108	22679-45951	183	229F0-51321	169
22018-30121	172	224T8-52291	183	22679-45971	161	229F0-51331	169
22018-30121	180	224T8-53021	152	22679-45991	168	229F0-51341	169
22018-30261	158	225A7-62021	135	22679-45991	176	229F0-51351	169
22018-30261	164	225N8-43021	161	22679-45991	184	229F0-51361	169
22018-30261	172	225R6-32001	121	22679-46011	168	229F0-51371	169
22018-30261	180	225R6-42031	55	22679-46011	168	229F0-51381	169
22132-40041	27	225R6-42031	128	22679-46011	176	229F0-94101	178
22132-40041	28	225R6-42031	129	22679-46031	161	229F0-94101	185
22132-40202	27	225R9-12101	121	22679-46031	177	229F2-22071	119
22132-40202	28	22517-40051	141	22679-46051	161	229F2-22151	117
22192-22091	10	22517-40051	142	22679-46071	184	229F2-22151	119
22192-42411	27	22517-40051	143	22679-46091	177	229F2-22171	119
22192-42411	28	22517-40051	144	22679-46111	161	229G0-52251	183
22193-03001	64	22517-40051	161	22679-46111	168	230C2-42201	22
22199-12401	56	22517-40051	177	22679-46111	176	230C2-42201	51
22199-12401	74	22548-34031	158	22679-46111	184	230C2-42201	52
22199-12401	74	22548-34051	158	22679-46151	161	23019-20011	156
22199-12401	75	22548-34061	158	22679-46151	161	231A0-82001	168
22199-12401	97	22580-53321	169	22679-46151	177	231A0-82001	176
22199-12401	105	22580-53321	169	22679-46171	161	231A8-10101	157
22199-12401	106	22655-42591	108	22679-46171	168	231A8-10101	157
22199-12401	151	22658-52301	97	22679-46171	177	231A8-10101	163
22199-12401	151	22673-72111	70	22679-46191	184	231A8-10101	163
22199-22001	156	22673-72131	70	22679-46211	176	231A8-10101	171
22199-22251	156	22673-72141	70	22679-46211	184	231A8-10101	171
22199-22261	156	22673-72161	70	22679-46231	168	231A8-10101	179
222A2-10211	4	22673-72252	70	22679-46271	161	231A8-10101	179
222A2-10211	5	22673-72261	70	22679-46271	177	231A8-10171	157
222A2-22061	119	22673-72321	70	22679-46311	168	231A8-10171	163
222A2-42031	128	22673-72391	70	22679-46331	161	231A8-10171	171
222A2-42031	129	22673-79801	70	22679-46331	176	231A8-10171	179
222A2-42511	27	22679-43831	169	22679-46371	168	231A8-12001	157
222A2-42511	28	22679-43831	184	22679-46391	161	231A8-12001	163
222A6-42451	124	22679-45611	168	22679-46391	177	231A8-12001	171
222A6-42461	124	22679-45651	176	22679-46411	176	231A8-12001	179
222A9-32011	103	22679-45671	168	22679-46451	161	231A8-12011	157
22208-40031	168	22679-45711	161	22679-46491	177	231A8-12011	163
22208-40031	176	22679-45711	168	22679-46531	161	231A8-12011	171
22208-40031	177	22679-45731	176	22679-46531	168	231A8-12011	179
22214-30321	74	22679-45731	183	22679-46591	177	231A8-12021	157
22218-40191	161	22679-45771	161	22679-46651	168	231A8-12021	163

Part No.	Fig.No.	Part No.	Fig.No.	Part No.	Fig.No.	Part No.	Fig.No.
231A8-12021	171	234A0-50321	169	234A3-72021	70	234A8-10621	179
231A8-12021	179	234A0-50331	169	234A3-72031	70	234A8-10631	157
231A8-12031	157	234A0-50341	169	234A3-72101	70	234A8-10631	163
231A8-12031	163	234A0-50351	169	234A6-32001	120	234A8-10631	171
231A8-12031	171	234A0-50361	169	234A6-32001	121	234A8-10631	179
231A8-12031	179	234A0-50371	169	234A6-43121	124	234A8-10641	157
231F8-10501	157	234A0-50381	169	234A8-02101	162	234A8-10641	163
231F8-10501	163	234A0-50501	169	234A8-02101	170	234A8-10641	171
231F8-10501	171	234A0-50511	169	234A8-02201	162	234A8-10641	179
231F8-10501	179	234A0-50521	169	234A8-10501	157	234A8-10652	157
231F8-10571	157	234A0-50531	169	234A8-10501	163	234A8-10652	163
231F8-10571	163	234A0-50541	169	234A8-10501	171	234A8-10652	171
231F8-10571	171	234A0-50551	169	234A8-10501	179	234A8-10652	179
231F8-10571	179	234A0-50561	169	234A8-10511	157	234A8-10662	157
232A0-62001	170	234A0-50571	169	234A8-10511	163	234A8-10662	163
232A8-42201	169	234A0-50581	169	234A8-10511	171	234A8-10662	171
232A8-42201	169	234A0-50591	169	234A8-10511	179	234A8-10662	179
232A8-42201	177	234A0-50601	169	234A8-10521	157	234A8-10672	157
232A8-42201	177	234A0-50611	169	234A8-10521	163	234A8-10672	163
232A8-42201	183	234A0-50621	169	234A8-10521	171	234A8-10672	171
232A8-42601	184	234A0-50631	169	234A8-10521	179	234A8-10672	179
232A8-42621	184	234A0-50641	169	234A8-10531	157	234A8-10682	157
232A8-42631	184	234A0-50651	169	234A8-10531	163	234A8-10682	163
232L8-42601	183	234A0-50661	169	234A8-10531	171	234A8-10682	171
232L8-42621	183	234A0-50671	169	234A8-10531	179	234A8-10682	179
232L8-42631	183	234A0-50681	169	234A8-10541	157	234A8-22202	159
23232-42072	21	234A0-50701	169	234A8-10541	163	234A8-22202	165
23232-42072	22	234A0-50711	169	234A8-10541	171	234A8-22202	181
23235-40091	111	234A0-50721	169	234A8-10541	179	234A8-40701	162
23322-22011	10	234A0-50731	169	234A8-10551	157	234A8-40701	170
234A0-50001	169	234A0-50741	169	234A8-10551	163	234A8-40701	178
234A0-50011	169	234A0-50751	169	234A8-10551	171	234A8-40701	185
234A0-50021	169	234A0-50761	169	234A8-10551	179	234A8-41001	162
234A0-50031	169	234A0-50771	169	234A8-10562	157	234A8-41001	170
234A0-50041	169	234A0-50781	169	234A8-10562	163	234A8-41001	178
234A0-50051	169	234A0-50791	169	234A8-10562	171	234A8-41001	185
234A0-50061	169	234A0-50801	169	234A8-10562	179	234A8-41101	162
234A0-50071	169	234A0-50811	169	234A8-10571	157	234A8-41101	170
234A0-50081	169	234A0-50821	169	234A8-10571	163	234A8-42551	161
234A0-50091	169	234A0-50831	169	234A8-10571	171	234A8-42551	161
234A0-50101	169	234A0-50841	169	234A8-10571	179	234A8-42551	169
234A0-50111	169	234A0-50851	169	234A8-10581	157	234A8-42551	169
234A0-50121	169	234A0-50861	169	234A8-10581	163	234A8-42551	177
234A0-50131	169	234A0-50871	169	234A8-10581	171	234A8-42551	177
234A0-50141	169	234A0-50881	169	234A8-10581	179	234A8-42551	184
234A0-50151	169	234A0-51231	169	234A8-10591	157	234A8-42561	169
234A0-50161	169	234A0-52501	169	234A8-10591	163	234A8-42561	169
234A0-50171	169	234A0-52501	169	234A8-10591	171	234A8-42561	177
234A0-50181	169	234A0-52511	169	234A8-10591	179	234A8-42561	177
234A0-50201	169	234A0-52511	169	234A8-10601	157	234A8-42571	169
234A0-50211	169	234A0-52611	169	234A8-10601	163	234A8-42571	169
234A0-50221	169	234A0-52611	169	234A8-10601	171	234A8-42571	177
234A0-50241	169	234A0-62051	170	234A8-10601	179	234A8-42571	177
234A0-50251	169	234A0-62111	170	234A8-10611	157	234A8-42571	183
234A0-50261	169	234A2-12201	4	234A8-10611	163	234A8-42602	162
234A0-50271	169	234A2-12201	5	234A8-10611	171	234A8-42602	170
234A0-50281	169	234A2-12211	4	234A8-10611	179	234A8-42602	178
234A0-50291	169	234A2-12211	5	234A8-10621	157	234A8-42602	185
234A0-50301	169	234A2-42301	39	234A8-10621	163	234A8-42611	162
234A0-50311	169	234A3-72001	70	234A8-10621	171	234A8-42611	170

Part No.	Fig.No.	Part No.	Fig.No.	Part No.	Fig.No.	Part No.	Fig.No.
234A8-42611	178	23654-32041	74	239A8-20101	173	24459-42951	178
234A8-42611	185	23654-32161	74	239A8-20111	165	24459-42951	185
234A8-42622	162	23654-34051	76	239A8-20111	173	246B2-43221	51
234A8-42622	170	23654-40501	90	239A8-20121	165	246B2-43221	52
234A8-42622	178	23654-40501	92	239A8-20121	173	24662-22032	10
234A8-42622	185	23654-40501	94	239A8-20131	165	24662-22131	10
234A8-43501	161	23654-40501	96	239A8-20131	173	247C2-43301	51
234A8-43501	168	23654-40511	92	239A8-20141	165	247C2-43301	52
234A8-43501	176	23655-22101	104	239A8-20141	173	247C2-43501	52
234A8-43501	177	23655-22101	123	239A9-12301	154	247C2-43601	51
234A8-43501	183	23655-42421	105	239A9-12501	154	247C2-43601	52
234A8-43501	184	23655-42421	105	239A9-92001	103	24868-42111	161
23451-02011	13	23655-42421	106	239A9-92001	103	24868-42111	177
23452-42181	23	23655-42421	106	239B2-10102	5	24868-42111	177
23453-02071	65	23656-42601	63	239B2-12141	4	25592-42081	23
23453-02091	65	23657-12002	135	239B2-12141	5	25592-42121	119
23453-02131	65	23657-42131	142	23917-42191	169	25595-42411	113
23454-40501	78	23658-42531	177	23917-42191	184	25595-42421	113
23454-40501	80	23658-52101	151	240A5-42411	109	25595-42452	112
23454-40501	82	23658-52101	151	242F6-80101	133	25595-42452	113
23454-40501	84	23658-52401	151	242F6-80201	134	25595-42452	114
23454-40601	80	23658-52401	151	242F6-82041	133	25595-42482	113
23457-42041	142	23659-12101	155	242F6-82041	134	25595-42491	107
23457-42041	143	23659-42161	165	242F6-82051	133	25595-42491	108
23458-32052	158	23659-42161	173	242F6-82051	134	25595-42501	113
23460-53171	97	23678-06002	160	242F6-82081	133	25599-22001	156
23500-82001	161	23678-06002	166	242F6-82091	133	25599-22051	156
23500-82001	168	23678-06002	174	242F6-82101	133	25599-22061	156
23500-82001	176	23678-06002	182	242F6-82101	134	25599-32001	123
23500-82001	177	23679-45801	183	242F6-82111	133	25599-32021	123
23500-82001	184	23772-12071	4	242F6-82111	134	256C1-08011	2
23647-40041	141	23772-12071	5	242F6-82121	133	256C1-12111	104
23650-52841	169	23775-42101	108	242F6-82121	134	256C2-42231	23
23650-52841	169	238A2-42151	23	242F6-82141	133	256C6-32011	1
23650-52851	169	238F9-12071	154	242F6-82271	133	256C9-52372	1
23650-52851	169	23813-00071	76	242F6-82281	133	256T2-42121	128
23650-52861	169	23813-00081	76	242F6-82361	134	256T2-42121	129
23650-52861	169	23819-20011	156	242F6-82371	134	25785-43091	107
23650-83521	184	23819-20021	156	24235-42091	111	25790-94021	178
23650-83531	184	23870-52871	140	24237-62331	73	25790-94021	185
23650-83551	184	239A2-10102	4	243C6-40021	123	26062-42881	35
23650-83561	184	239A2-12021	7	243C6-42821	130	26062-42881	35
23650-83561	184	239A2-12141	4	243C7-80201	73	26062-42881	37
23652-12051	7	239A2-40501	17	24320-52001	169	26062-42881	47
23652-12051	11	239A2-42221	24	24320-55001	183	26062-42881	48
23652-12051	57	239A2-42221	24	24329-45541	59	26062-42881	49
23652-44001	44	239A2-42301	19	24329-45541	61	26062-42881	50
23653-72031	70	239A2-42301	20	24329-45541	63	26519-12281	154
23653-72041	70	239A2-42311	19	24329-46201	162	26602-42041	74
23653-72051	70	239A2-42311	20	24329-46201	178	26602-42101	178
23653-72062	70	239A4-12402	71	24329-46201	185	26602-42221	147
23653-72072	70	239A4-12411	71	24329-46201	185	26602-42221	147
23653-72081	70	239A4-12431	71	24353-72001	65	27042-42312	46
23653-72101	70	239A4-12441	71	24354-32311	76	27042-42322	150
23653-72131	70	239A4-12541	128	24453-02061	65	27042-64311	46
23653-72142	70	239A5-40501	107	24453-02102	65	27045-40302	107
23653-72152	70	239A5-40501	112	24454-32232	74	27045-40302	108
23653-72161	70	239A5-42301	111	24459-42291	183	27045-40302	113
23653-72171	70	239A5-42471	109	24459-42951	162	27045-42371	108
23653-72201	70	239A8-20101	165	24459-42951	170	27049-12172	153

PARTS NUMBER INDEX

Part No.	Fig.No.	Part No.	Fig.No.	Part No.	Fig.No.	Part No.	Fig.No.
271A7-52301	117	277P0-81742	184	277P8-22081	180	514A2-72411	145
271A7-60351	135	277P0-81752	184	277P8-22081	182	514A2-72411	145
271A9-12251	154	277P0-81762	184	277P8-22081	182	514A2-72411	145
271G3-72001	70	277P0-81902	184	277P8-22081	182	514A2-82012	155
272K8-52201	160	277P0-81932	184	277P8-32701	160	514A3-72052	74
272K8-52201	166	277P0-81942	184	277P8-32701	166	514A3-72062	74
272K8-52201	174	277P0-81952	184	277P8-32701	174	514A3-72091	25
272K8-52201	182	277P0-81962	184	277P8-32701	182	514A3-72101	76
273A6-42471	126	277P0-89811	184	277T0-62071	170	514A3-72211	74
273A9-12242	153	277P0-92131	178	27732-42221	100	514A3-82002	155
27397-52101	59	277P8-22051	158	27732-42311	38	514A3-82301	172
27410-53111	169	277P8-22051	158	27732-42311	40	514A3-82321	172
27410-53111	169	277P8-22051	160	278M2-42061	115	514A3-82331	172
27419-12061	155	277P8-22051	160	278M2-42061	115	514A3-82341	172
27419-12062	154	277P8-22051	164	278M6-42031	127	514A3-82351	172
27419-12071	155	277P8-22051	166	278M6-42031	127	514A3-82361	172
27419-12072	154	277P8-22051	166	278M6-42031	127	514A3-82371	172
27419-12101	153	277P8-22051	172	278M6-42031	127	514A3-82381	172
27539-12021	153	277P8-22051	174	278R0-63151	183	514A3-82391	172
27662-62721	98	277P8-22051	174	27912-62441	115	514A3-82601	78
27662-63711	100	277P8-22051	174	27970-53141	184	514A3-82601	80
27682-62131	51	277P8-22051	180	27978-42411	183	514A3-82601	82
27682-62131	52	277P8-22051	182	27978-42421	183	514A3-82601	84
277H7-60601	140	277P8-22051	182	27978-42601	183	514A5-12011	98
277P0-60301	170	277P8-22051	182	27979-43101	162	514A5-12011	98
277P0-60311	170	277P8-22061	158	27979-43101	170	514A5-12021	99
277P0-60321	170	277P8-22061	158	27979-43101	178	514A5-12021	100
277P0-60331	170	277P8-22061	160	27979-43101	185	514A5-12021	102
277P0-60341	170	277P8-22061	164	280C2-42301	18	514A5-32341	40
277P0-60351	170	277P8-22061	166	280C2-42311	18	516G0-60101	2
277P0-60361	170	277P8-22061	172	280C2-42331	17	516G0-62011	2
277P0-60371	170	277P8-22061	174	280C2-42331	18	516G1-42111	35
277P0-60381	170	277P8-22061	174	280C2-42341	18	516G1-42111	35
277P0-60391	170	277P8-22061	180	280C2-42351	17	516G1-42111	40
277P0-60401	170	277P8-22061	182	280C2-42351	18	516G1-42211	37
277P0-60411	170	277P8-22061	182	281E6-42521	128	516G1-42211	40
277P0-60421	170	277P8-22071	158	281E6-42521	129	516G2-72051	120
277P0-60431	170	277P8-22071	160	281E6-42571	128	516G2-72701	155
277P0-60441	170	277P8-22071	160	281E6-42571	129	516G2-72711	155
277P0-60451	170	277P8-22071	164	281E7-42101	145	516G2-82051	155
277P0-60461	170	277P8-22071	166	281E7-62041	149	516G2-82061	155
277P0-60471	170	277P8-22071	166	282M8-32501	169	516G3-82801	155
277P0-60481	170	277P8-22071	172	29590-64501	4	516G5-13051	98
277P0-81101	184	277P8-22071	174	29590-64501	5	516G5-13151	98
277P0-81131	184	277P8-22071	174	3956323	42	516G6-92001	45
277P0-81141	184	277P8-22071	174	509K2-30101	18	516G6-92011	45
277P0-81151	184	277P8-22071	180	509K2-82251	155	516G6-92022	45
277P0-81161	184	277P8-22071	182	509K3-82681	155	516G6-92031	45
277P0-81302	184	277P8-22071	182	509K3-83451	155	516G6-92151	45
277P0-81332	184	277P8-22071	182	509P9-90101	29	516G9-10101	38
277P0-81342	184	277P8-22081	158	509S3-92261	127	516G9-12011	38
277P0-81352	184	277P8-22081	160	509S3-92261	127	516M5-12301	103
277P0-81362	184	277P8-22081	160	514A1-41001	36	52E00-52191	132
277P0-81502	184	277P8-22081	164	514A1-41001	48	52E00-52201	132
277P0-81532	184	277P8-22081	166	514A1-41001	49	52N43-72101	15
277P0-81542	184	277P8-22081	166	514A1-41011	36	52N50-80201	12
277P0-81552	184	277P8-22081	172	514A1-41021	36	52N50-80211	12
277P0-81562	184	277P8-22081	174	514A1-41031	36	52N50-80221	12
277P0-81702	184	277P8-22081	174	514A1-42041	40	52N50-80301	12
277P0-81732	184	277P8-22081	174	514A2-42201	97	52N50-82001	12

PARTS NUMBER INDEX

Part No.	Fig.No.	Part No.	Fig.No.	Part No.	Fig.No.	Part No.	Fig.No.
52N50-82011	12	52N53-91931	182	52N56-92001	45	52N59-02001	38
52N50-82021	12	52N53-91941	182	52N56-92101	45	52N59-20411	123
52N51-30201	39	52N53-91951	182	52N56-92201	45	52N59-20412	123
52N51-31001	39	52N53-91961	182	52N56-92211	45	52N59-92021	102
52N51-32001	39	52N54-60221	136	52N57-E2001	51	52N59-92031	102
52N51-32011	39	52N54-60231	137	52N57-E2001	52	52N59-92051	102
52N51-32101	39	52N54-60241	138	52N57-E2011	51	52N59-92101	27
52N51-42101	34	52N54-60251	139	52N57-E2011	52	52N59-92101	29
52N51-42101	35	52N55-00101	98	52N57-E2201	51	52N59-92201	26
52N51-42111	34	52N55-00111	98	52N57-E2201	52	52N59-92201	26
52N51-42111	34	52N55-00121	98	52N57-42001	77	52N59-92501	29
52N51-42111	35	52N55-00131	98	52N57-42011	77	52U56-52001	6
52N51-42111	35	52N55-00141	98	52N57-42021	77	521A2-42001	23
52N51-42121	34	52N55-00501	103	52N57-42031	77	521A2-42061	44
52N51-42121	35	52N55-00511	101	52N57-42041	77	522A1-10201	2
52N51-42151	31	52N55-00521	101	52N57-42051	77	522A2-42001	23
52N51-42151	32	52N55-00551	103	52N57-42101	65	522A2-61561	70
52N51-42151	33	52N55-02451	25	52N57-50101	43	522A3-80401	82
52N51-42161	30	52N55-12001	102	52N57-50301	43	522A3-80401	82
52N51-42161	32	52N55-12011	102	52N57-52001	47	522A3-80451	94
52N51-42301	30	52N55-12101	99	52N57-52001	48	522A3-80451	94
52N51-42301	31	52N55-12111	99	52N57-52001	49	522A6-80201	82
52N51-42301	32	52N55-30401	123	52N57-52031	47	522A6-80211	82
52N51-42401	34	52N55-30402	123	52N57-52031	48	522A6-80221	82
52N51-42401	34	52N55-30451	124	52N57-52031	49	522A6-80301	87
52N51-42401	35	52N55-30501	131	52N57-52051	46	522A6-80311	87
52N51-42401	35	52N55-30511	131	52N57-52061	46	522A6-80321	87
52N51-42411	34	52N55-32051	127	52N57-52101	46	522A6-80401	89
52N51-42411	34	52N55-32061	127	52N57-52111	46	522A6-80411	89
52N51-42411	35	52N55-32091	127	52N57-52151	46	522A6-80421	89
52N51-42411	35	52N55-32091	127	52N57-52161	46	522A6-80431	89
52N51-42511	34	52N55-32101	127	52N57-60451	124	522A6-80441	89
52N51-42511	34	52N55-32111	127	52N57-72001	128	522A6-80451	89
52N51-42511	35	52N55-32141	132	52N57-72001	129	522A6-80501	94
52N51-61201	164	52N55-32171	124	52N58-10201	126	522A6-80511	94
52N51-61211	164	52N55-32211	77	52N58-10211	130	522A6-80521	94
52N51-61301	172	52N55-32211	77	52N58-10221	130	524T3-84031	172
52N51-61311	172	52N55-32301	131	52N58-10301	126	524W5-12091	98
52N51-70101	11	52N55-32311	131	52N58-10301	130	52672-72231	161
52N51-70201	11	52N55-32331	126	52N58-10311	127	52672-72231	168
52N51-70301	11	52N55-32401	132	52N58-12201	126	52672-72231	176
52N52-32001	16	52N55-32401	132	52N58-12501	126	52672-72231	177
52N52-72101	155	52N55-32411	132	52N58-12501	130	52672-72231	183
52N52-72201	155	52N55-32411	132	52N58-12511	126	52672-72231	184
52N52-82401	155	52N55-40081	132	52N58-12511	130	52672-82073	155
52N52-82501	155	52N55-40211	124	52N58-22001	40	52676-80202	86
52N52-90201	98	52N55-40411	132	52N58-22101	40	52676-80302	86
52N53-70101	74	52N55-42251	132	52N58-82001	44	52676-80402	86
52N53-70102	74	52N55-42301	24	52N58-82101	44	52676-80601	82
52N53-70121	74	52N55-42601	127	52N58-92001	37	52676-80601	82
52N53-70122	74	52N55-42611	127	52N58-92021	37	52676-80802	87
52N53-70201	74	52N56-12051	42	52N58-92021	48	529F1-42201	36
52N53-70202	74	52N56-20101	14	52N58-92021	49	529F1-42251	36
52N53-72101	16	52N56-22011	50	52N58-92041	37	529F1-42251	48
52N53-72201	74	52N56-22021	50	52N58-92111	35	529F1-42251	49
52N53-72211	74	52N56-22021	51	52N58-92111	35	529F3-70401	141
52N53-72301	16	52N56-22021	52	52N58-92111	37	529F3-70411	142
52N53-74001	164	52N56-22201	133	52N58-92201	36	529F3-70411	143
52N53-74001	172	52N56-22401	50	52N58-92211	36	529F3-70421	144
52N53-91901	182	52N56-72001	41	52N58-92251	36	529F3-82101	172

PARTS NUMBER INDEX

Part No.	Fig.No.	Part No.	Fig.No.	Part No.	Fig.No.	Part No.	Fig.No.
529F3-82111	172	53656-80201	88	53666-80501	81	558A9-92001	27
529F7-52241	47	53656-80211	88	53666-80601	79	558A9-92001	28
529F7-52241	49	53656-80401	89	53666-80601	81	558A9-92001	47
530C1-42001	30	53656-80411	89	53666-80701	81	558A9-92001	49
530C1-42001	33	53656-80501	88	53666-80901	93	57045-52141	76
531A0-52521	28	53656-80511	88	53666-81301	95	57045-52151	76
532A1-70201	11	53656-80601	88	53666-81401	93	571A3-82361	155
532A1-70201	12	53656-80611	88	53666-81501	91	571A6-82081	94
534A1-64402	165	53656-80701	88	53666-81501	93	577H2-82021	155
534A1-64402	173	53656-80711	88	53666-81601	93	577H3-82151	155
534A1-64412	165	53656-80901	88	53666-81801	79	577H5-13051	103
534A1-64412	173	53656-80901	89	53666-81801	81	577P3-74001	164
534A2-74001	165	53656-80911	88	53666-81801	81	577P3-74001	166
534A2-74001	173	53656-80911	89	53666-81801	83	577P3-74001	166
534A2-74051	165	53656-81301	94	53666-81901	91	577P3-74001	172
534A2-74051	173	53656-81301	94	53666-81901	93	577P3-74001	174
534A2-74101	165	53656-81401	92	53666-81901	93	577P3-74001	174
534A2-74101	173	53656-81501	90	53666-81901	95	577P3-74001	174
534A2-74201	165	53656-81501	92	53666-82021	91	577P3-74011	164
534A2-74201	173	53656-81601	92	53666-82021	93	577P3-74011	166
534A2-74301	165	53656-82001	87	53666-82021	95	577P3-74011	172
534A2-74301	173	53656-82041	79	53666-82031	91	577P3-74011	174
534A3-82311	155	53656-82041	81	53666-82031	93	577P3-74011	174
534A3-82421	155	53656-82041	83	53666-82031	95	58106-31011	23
534A3-82531	155	53656-82041	85	53666-82041	91	62A89-21811	167
534A4-22001	100	53656-82041	88	53666-82041	93	62A89-21811	175
534A4-22011	100	53656-82041	88	53666-82041	95	62A89-21831	167
534A5-00401	103	53656-82041	89	53675-55051	162	62A89-21831	167
534A5-00411	103	53656-82041	89	53675-55051	178	62A89-21831	175
534A6-80171	84	53656-82051	79	53675-55051	185	62A89-21831	175
534A6-80271	96	53656-82051	81	538B6-60302	5	62A89-21851	167
534A6-85001	96	53656-82051	83	539A0-82201	12	62A89-21851	167
534A6-85011	84	53656-82051	85	539A2-82051	155	62A89-21851	167
534A7-02001	23	53656-82051	88	539A5-32361	28	62A89-21851	175
534A7-50601	47	53656-82051	88	539A6-22021	23	62A89-21851	175
534A7-50601	48	53656-82051	89	539A6-52051	9	62A89-21851	175
534A7-50601	49	53656-82051	89	539A6-52151	9	62050-12331	174
534A9-22001	100	53656-82061	79	539A6-60302	4	62050-12331	182
534A9-22011	100	53656-82061	81	539A6-80201	82	62150-14321	185
534A9-22211	24	53656-82061	83	539A6-80301	94	62156-52501	85
534A9-92131	28	53656-82061	85	539A7-52041	46	62459-23371	167
534F3-82001	90	53656-82061	88	539A7-52101	48	62459-23371	167
534F3-82001	92	53656-82061	88	539A7-52101	49	62459-23371	167
534F3-82001	94	53656-82061	89	539A8-22151	40	62459-23371	175
534F3-82001	96	53656-82061	89	539A8-92251	36	62459-23371	175
53456-80502	80	53657-42053	86	539A8-92251	48	62459-23371	175
53456-80702	80	53657-42081	65	539A8-92251	49	63110-18921	153
53456-80902	78	53657-42091	65	539A9-02011	38	63110-18921	172
53456-80902	80	53658-43001	169	539A9-32001	103	63130-15301	174
53456-82052	87	53658-43001	184	542F3-80101	133	63130-15301	182
53456-82062	87	53658-43011	169	542F3-80201	134	641B0-12701	100
53457-40003	86	53658-43011	184	542F3-82011	133	641B0-12751	100
53457-42151	86	53658-43021	169	542F3-82011	134	79244-23319	70
535C8-92051	36	53658-43021	184	54315-32561	39	97103-35431	97
535H3-82261	115	53658-43031	169	55593-02371	144		
536G2-82181	155	53658-43031	184	55593-62551	170		
536G2-82281	155	53658-43041	169	55792-52601	46		
53651-12551	2	53658-43041	184	55792-52611	46		
53652-82541	155	53666-80201	81	55792-52621	46		
53652-82551	155	53666-80401	83	55792-52641	46		

No.PF−2U0A
2006年　3月　　発行

TCM株式会社
本　社　大阪市西区京町堀1−15−10
発 行　　TCMテクノ株式会社

ISSUED:MARCH,2006

TCM CORPORATION
INTERNATIONAL MARKETING DIVISION : 1-15-5, Nishi−shimbashi, Minato−ku, Tokyo
105−0003, Japan
FAX : Japan +81−3−35918152, 3−35918153

無断で転載・複製を禁ず
All rights reserved.

SA−0603001(H)　Printed in Japan